US00RE49784E

(19) **United States**
(12) **Reissued Patent**
Ren et al.

(10) **Patent Number: US RE49,784 E**
(45) **Date of Reissued Patent: Jan. 2, 2024**

(54) **APPARATUS OF PLURAL CHARGED-PARTICLE BEAMS**

(71) Applicant: **ASML Netherlands B.V.**, Veldhoven (NL)

(72) Inventors: **Weiming Ren**, San Jose, CA (US); **Xuedong Liu**, San Jose, CA (US); **Xuerang Hu**, San Jose, CA (US); **Zhong-wei Chen**, San Jose, CA (US)

(73) Assignee: **ASML Netherlands B.V.**, Veldhoven (NL)

(21) Appl. No.: **17/005,212**

(22) Filed: **Aug. 27, 2020**

Related U.S. Patent Documents

Reissue of:
(64) Patent No.: **10,062,541**
Issued: **Aug. 28, 2018**
Appl. No.: **15/417,360**
Filed: **Jan. 27, 2017**

U.S. Applications:
(60) Provisional application No. 62/287,626, filed on Jan. 27, 2016.

(51) **Int. Cl.**
H01J 37/06 (2006.01)
H01J 37/28 (2006.01)
(Continued)

(52) **U.S. Cl.**
CPC ***H01J 37/06*** (2013.01); ***G01N 23/2251*** (2013.01); ***H01J 37/05*** (2013.01);
(Continued)

(58) **Field of Classification Search**
CPC H01J 37/05; H01J 37/06; H01J 37/147; H01J 37/1472; H01J 37/1474; H01J 37/15;
(Continued)

(56) **References Cited**

U.S. PATENT DOCUMENTS

5,943,349 A * 8/1999 Ohta H01S 5/141 372/20
6,943,349 B2 9/2005 Adamec et al.
(Continued)

FOREIGN PATENT DOCUMENTS

CN 102598199 A 7/2012
CN 104488064 A 4/2015
(Continued)

OTHER PUBLICATIONS

Office Action issued by the Taiwanese Patent Office in related Patent Application No. 108110284, dated Nov. 4, 2019 (7 pgs.).
(Continued)

Primary Examiner — James A Menefee
(74) *Attorney, Agent, or Firm* — Finnegan, Henderson, Farabow, Garrett & Dunner, LLP

(57) **ABSTRACT**

A new multi-beam apparatus with a total FOV variable in size, orientation and incident angle, is proposed. The new apparatus provides more flexibility to speed the sample observation and enable more samples observable. More specifically, as a yield management tool to inspect and/or review defects on wafers/masks in semiconductor manufacturing industry, the new apparatus provide more possibilities to achieve a high throughput and detect more kinds of defects.

36 Claims, 24 Drawing Sheets

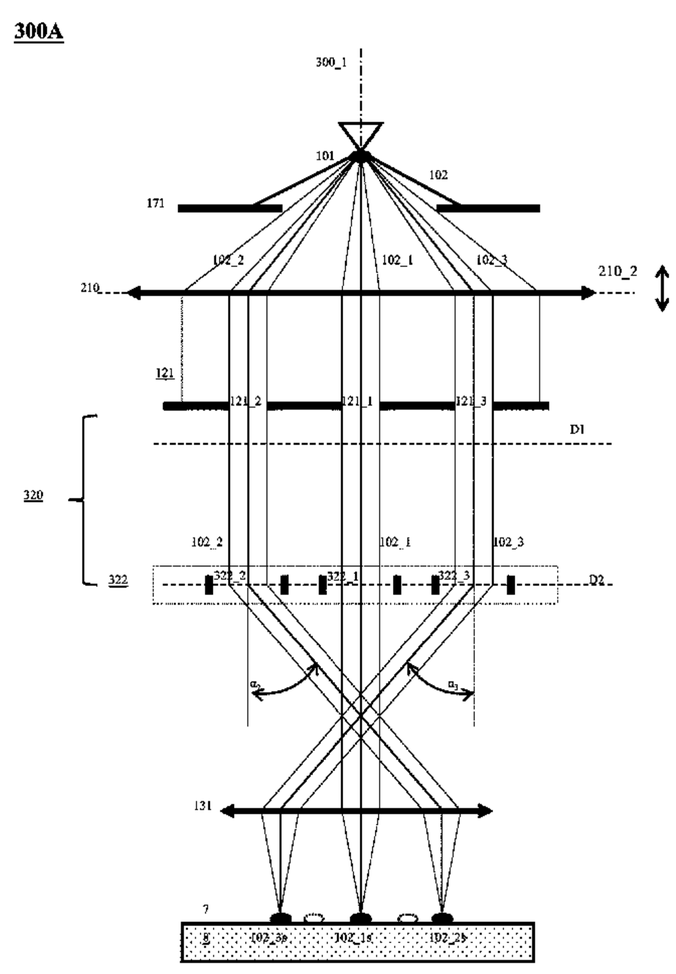

(51) **Int. Cl.**

H01J 37/147	(2006.01)
H01J 37/22	(2006.01)
G01N 23/2251	(2018.01)
H01J 37/145	(2006.01)
H01J 37/05	(2006.01)
H01J 37/244	(2006.01)

(52) **U.S. Cl.**
CPC ***H01J 37/145*** (2013.01); ***H01J 37/1474*** (2013.01); ***H01J 37/226*** (2013.01); ***H01J 37/244*** (2013.01); ***H01J 37/28*** (2013.01); *G01N 2223/418* (2013.01); *G01N 2223/6116* (2013.01); *H01J 2237/057* (2013.01); *H01J 2237/2448* (2013.01); *H01J 2237/2817* (2013.01)

(58) **Field of Classification Search**
CPC H01J 37/21; H01J 2237/024; H01J 2237/0822; H01J 2237/0825; H01J 2237/15; H01J 2237/1502; H01J 2237/1508; H01J 2237/1516; H01J 2237/21
See application file for complete search history.

(56) **References Cited**

U.S. PATENT DOCUMENTS

7,244,949	B2 *	7/2007	Knippelmeyer	B82Y 10/00 250/396 ML
9,035,249	B1 *	5/2015	Frosien	H01J 37/05 250/310
9,153,413	B2 *	10/2015	Almogy	H01J 37/05
9,607,805	B2 *	3/2017	Liu	H01J 37/28
9,691,588	B2 *	6/2017	Ren	H01J 37/28
9,922,799	B2 *	3/2018	Li	H01J 37/28
10,062,541	B2	8/2018	Ren et al.	
10,141,160	B2	11/2018	Ren et al.	
10,236,156	B2	3/2019	Ren et al.	
10,276,347	B2 *	4/2019	Ren	H01J 37/1472
10,395,886	B2	8/2019	Ren et al.	
10,541,110	B2 *	1/2020	Li	H01J 37/10
10,643,820	B2 *	5/2020	Ren	H01J 37/05
11,062,877	B2 *	7/2021	Li	H01J 37/10
11,217,423	B2 *	1/2022	Ren	H01J 37/28
11,302,514	B2 *	4/2022	Ren	H01J 37/28
11,328,894	B2 *	5/2022	Ren	H01J 37/05
2001/0010362	A1	8/2001	Simizu	
2003/0168606	A1	9/2003	Adamec et al.	
2004/0232349	A1	11/2004	Kruit	
2009/0014649	A1	1/2009	Nakasuji et al.	
2010/0213370	A1	8/2010	Nakasuji et al.	
2012/0241606	A1	9/2012	Han et al.	
2014/0158902	A1	6/2014	Knippelmeyer et al.	
2014/0175303	A1	6/2014	Touya et al.	
2015/0069235	A1	3/2015	Kemen et al.	
2015/0155134	A1	6/2015	Frosien et al.	
2015/0179399	A1	6/2015	Kruit et al.	
2015/0270095	A1	9/2015	Kruit	
2016/0267096	A1	9/2016	Zhu et al.	
2016/0268096	A1	9/2016	Ren et al.	
2016/0284505	A1 *	9/2016	Ren	H01J 37/28
2017/0025241	A1	1/2017	Li et al.	
2017/0025243	A1 *	1/2017	Ren	H01J 37/06
2017/0154756	A1 *	6/2017	Ren	H01J 37/14
2020/0286707	A1 *	9/2020	Maassen	H01J 37/21
2022/0005665	A1 *	1/2022	Ren	H01J 37/145

FOREIGN PATENT DOCUMENTS

EP	2508903	A2	10/2012
EP	2854153	A2	4/2015
EP	2508903	B1	5/2016
JP	2005-268788	A	9/2005
JP	2007317467	A	12/2007
JP	2008008890	A	1/2008
JP	2009507352	A	2/2009
JP	2012243803	A	12/2012
JP	2015520501	A	7/2015
KR	20150035741	A	4/2015
TW	201248673	A	12/2012
TW	201250759	A	12/2012
TW	201610425	A	3/2016
WO	WO 2012/128967	A2	9/2012
WO	WO 2016/145458	A1	9/2016
WO	WO 2017/015483	A1	1/2017

OTHER PUBLICATIONS

Invitation Letter to Respond to the Written Opinion issued by the IPOS Intellectual Property Office of Singapore, in related Patent Application No. 11201806100P, dated Sep. 3, 2019 (1 pg.).
Written Opinion issued by the IPOS Intellectual Property Office of Singapore, in related Patent Application No. 11201806100P, dated Aug. 2, 2019 (7 pgs.).
Search Report issued by the IPOS Intellectual Property Office of Singapore, in related Patent Application No. 11201806100P, dated Aug. 2, 2019 (4 pgs.).
Notice for Reasons for Rejection issued by the Japanese Office Action in related Japanese Application No. 2018-538555, dated Sep. 30, 2019 (7 pgs.).
Notification of Reason(s) for Refusal issued in related Korean Patent Application No. 10-2018-7024537, dated Apr. 27, 2020 (10 pgs.).
Extended European Search Report, pursuant to Rule 62 EPC, the Supplementary European Search Report (Art. 153(7) EPC) and the European Search Opinion issued in related Patent Application No. 17744929.5, dated Sep. 20, 2019 (7 pgs.).
Office Action issued by the ROC (Taiwan) Patent Office in related Patent Application No. 106104145, dated Jul. 13, 2018 (14 pgs.).
First Chinse Office Action issued in related Chinese Patent Application No. 201780019776.X, dated Jun. 29, 2020 (10 pgs.).
International Search Report issued in related PCT Patent Application No. PCT/US17/15223, dated Jun. 5, 2017 (4 pgs.).
Notice of Reasons for Rejection issued in related Japanese Patent Application No. 2020-109028; dated Jul. 2, 2021 (6 pgs.).
Examination Report from the Intellectual Property Office of Singapore issued in related Singapore Patent Application No. 11201806100P; dated Mar. 14, 2023 (6 pgs.).
Weiming Ren et al., U.S. Appl. No. 15/065,342, filed Mar. 9, 2016, USA.
Weiming Ren et al., U.S. Appl. No. 15/078,369, filed Mar. 23, 2016, USA.
Xuedong Liu et al., U.S. Appl. No. 15/150,858, filed May 10, 2016, USA.
Shuai Li et al., U.S. Appl. No. 15/213,781, filed Jul. 19, 2016, USA.
Weiming Ren et al., U.S. Appl. No. 15/216,258, filed Jul. 21, 2016, USA.
Weiming Ren et al., U.S. Appl. No. 15/365,145, filed Nov. 30, 2016, USA.

* cited by examiner

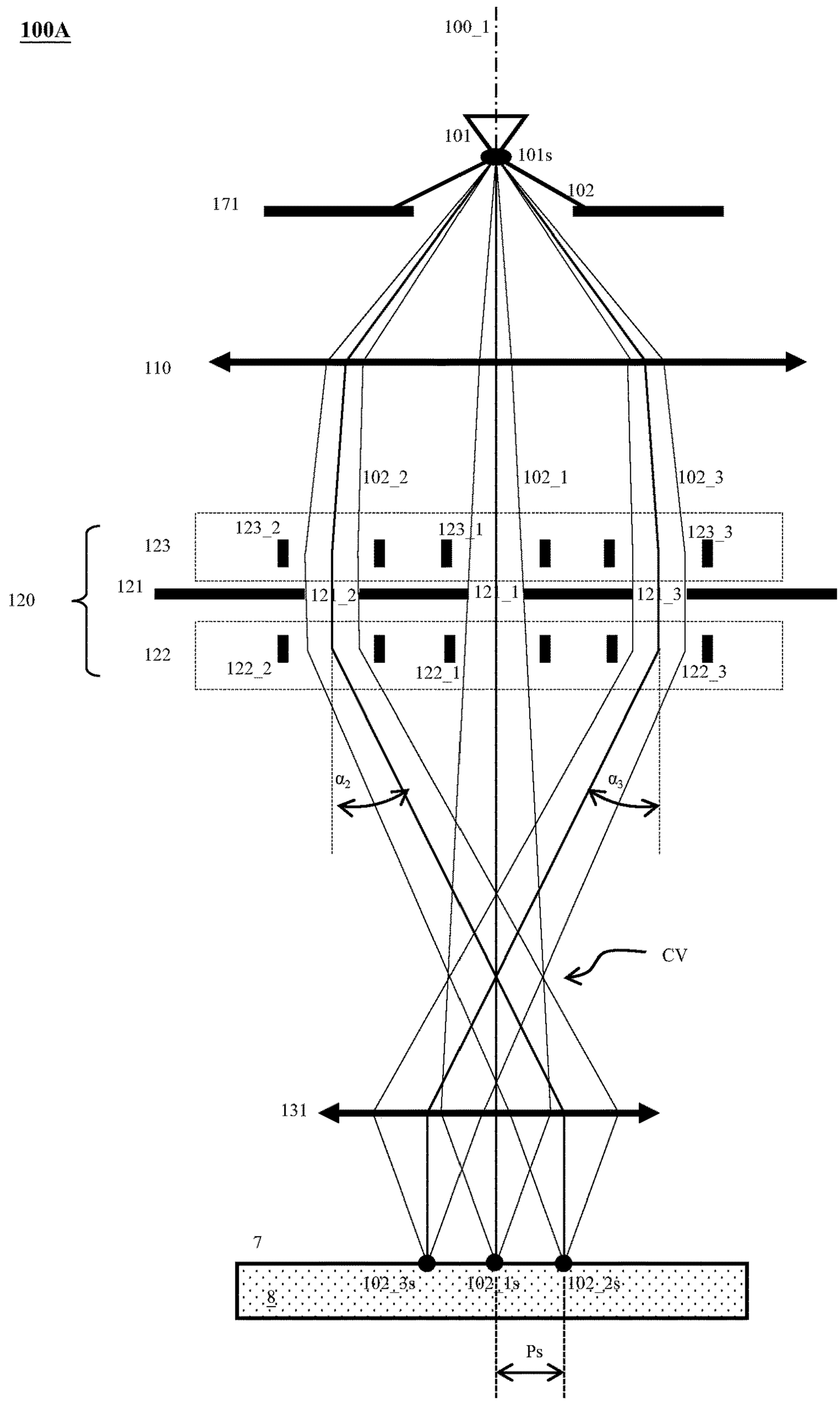

Figure 1A (Prior-Art)

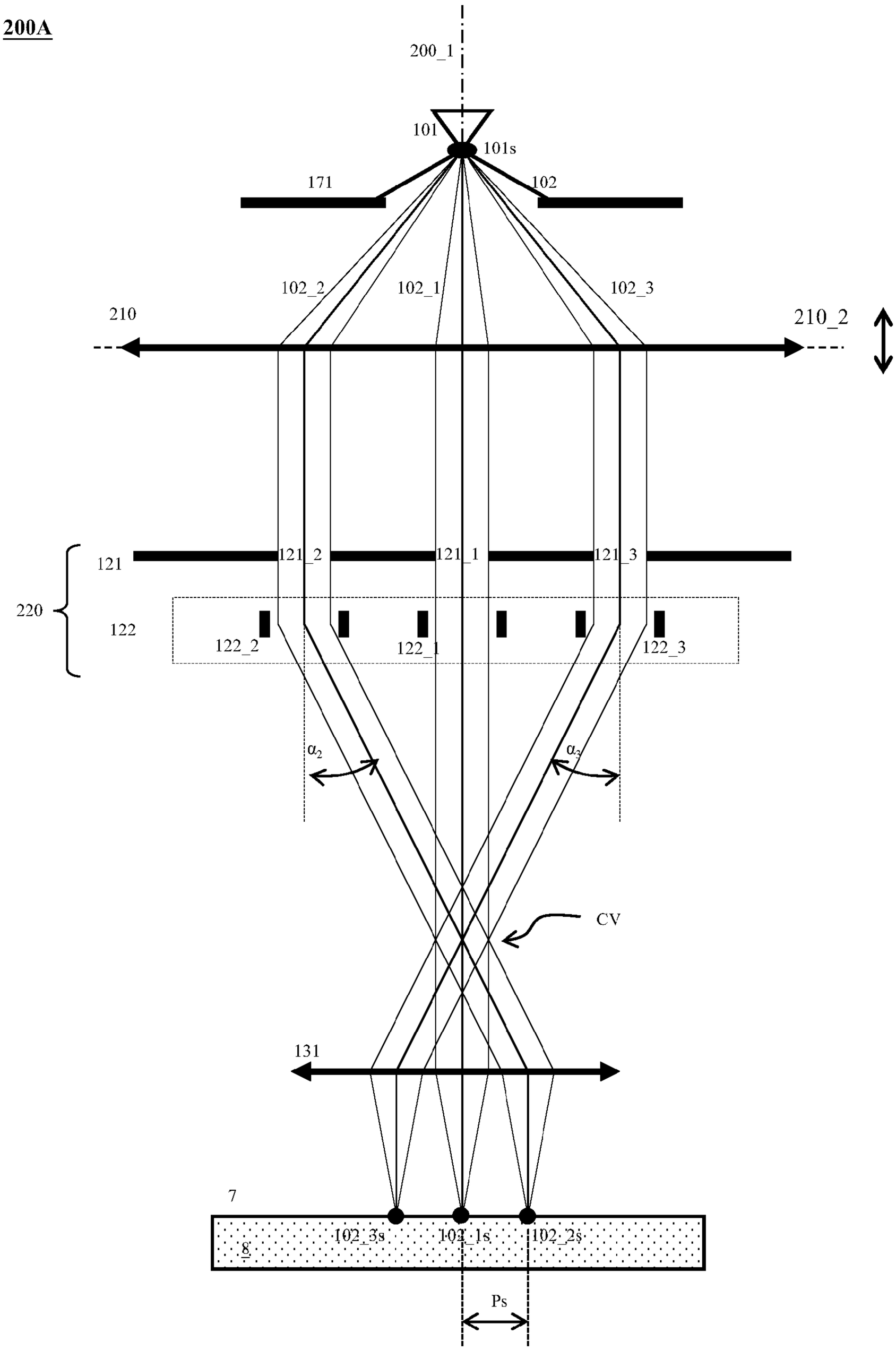

Figure 1B (Prior-Art)

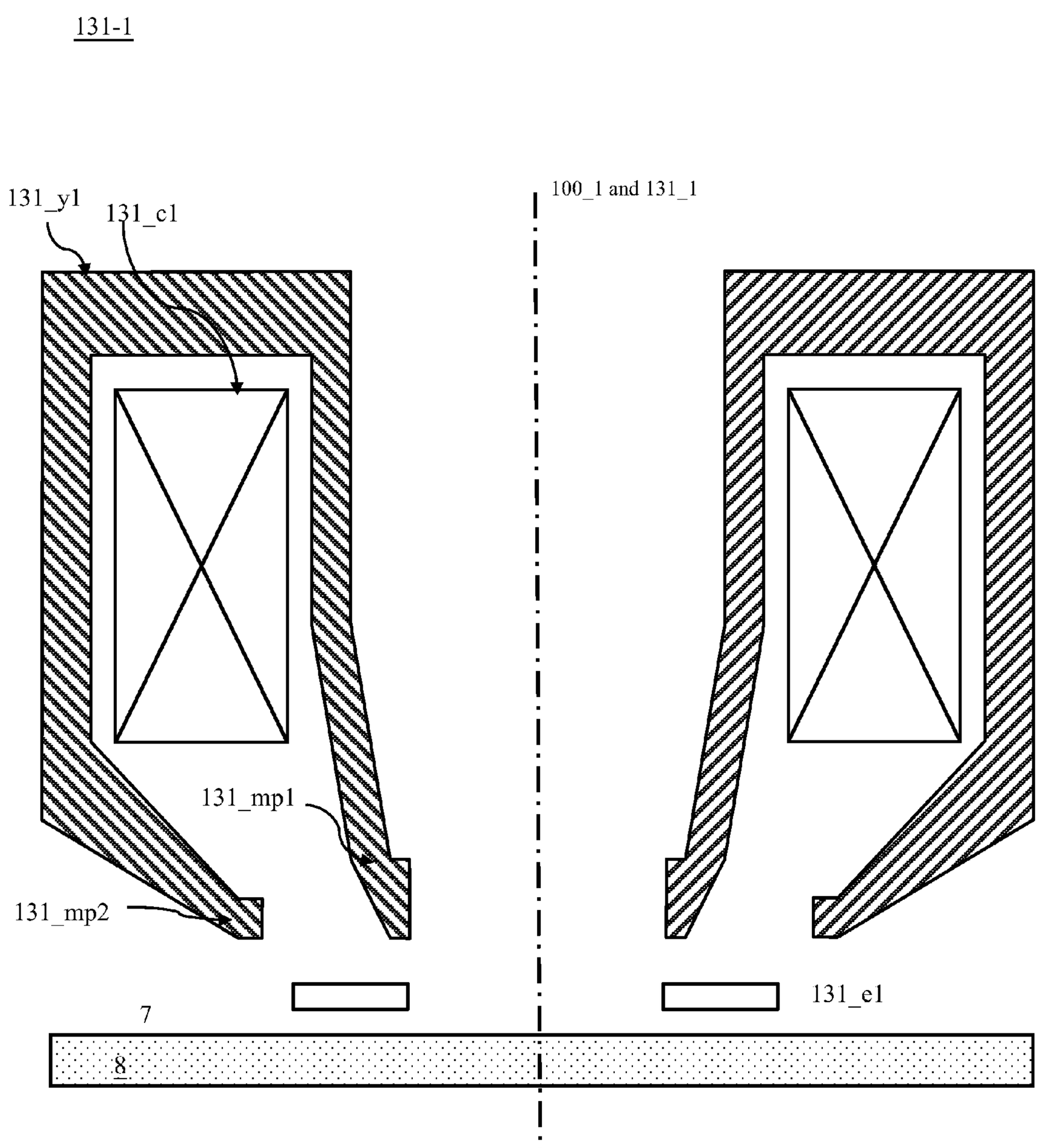

Figure 1C (Prior-Art)

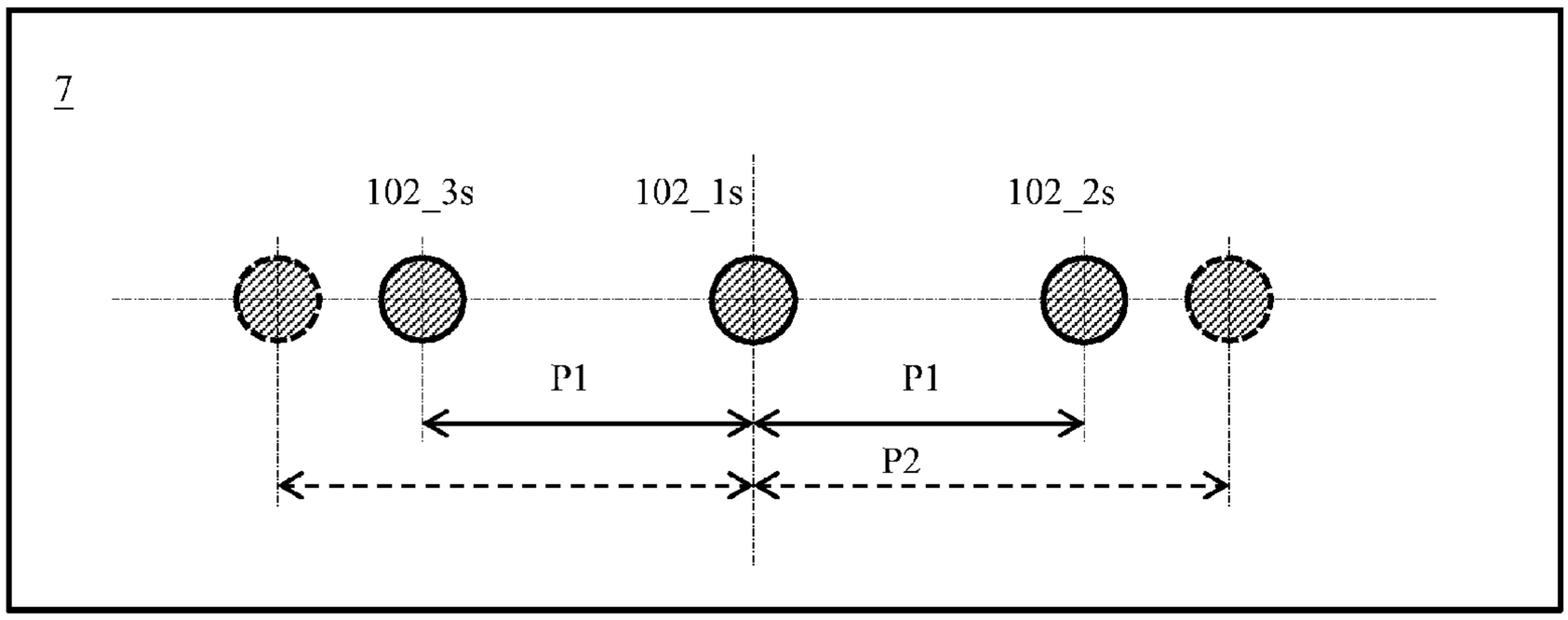

Figure 2A

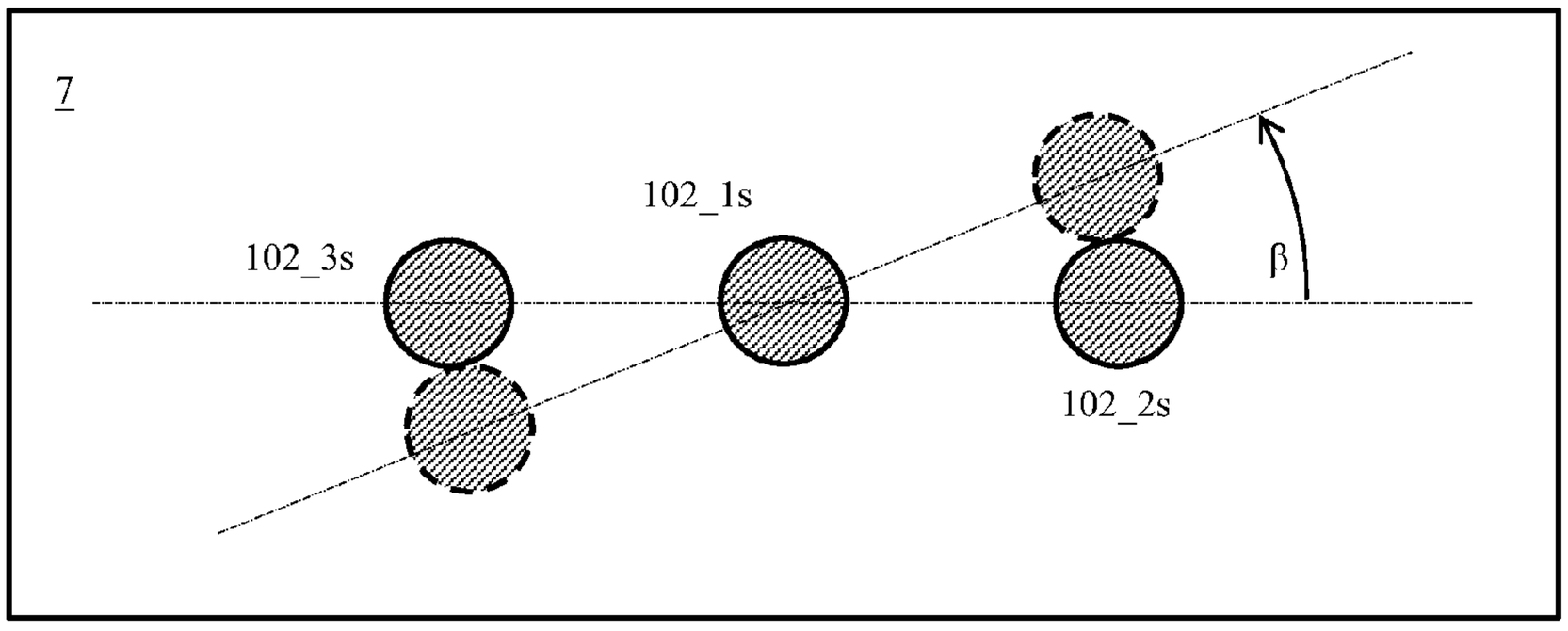

Figure 2B

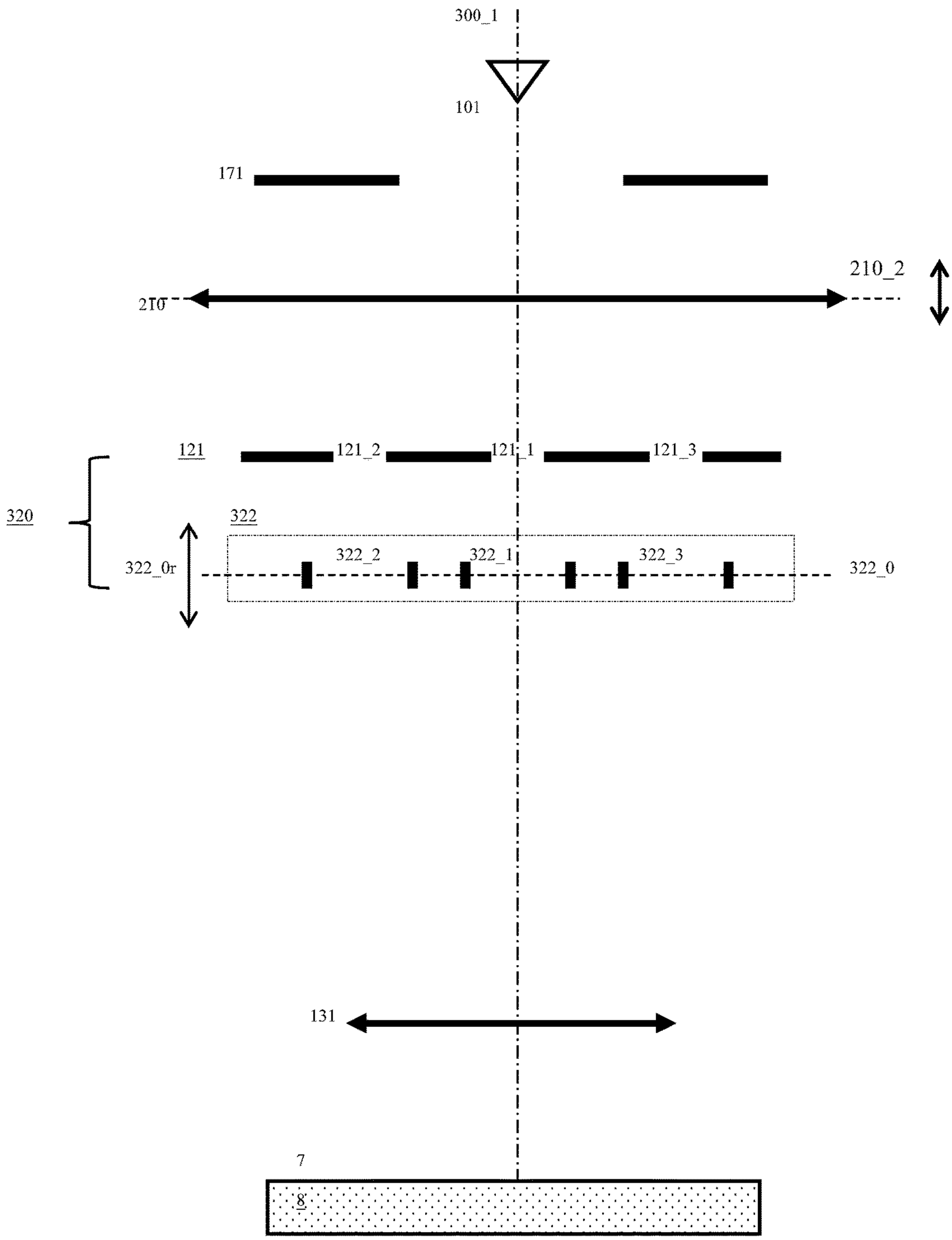
300A
300_1
101
171
210_2
210
121
121_2
121_1
121_3
320
322
322_0r
322_2
322_1
322_3
322_0
131
7
8

Figure 3A

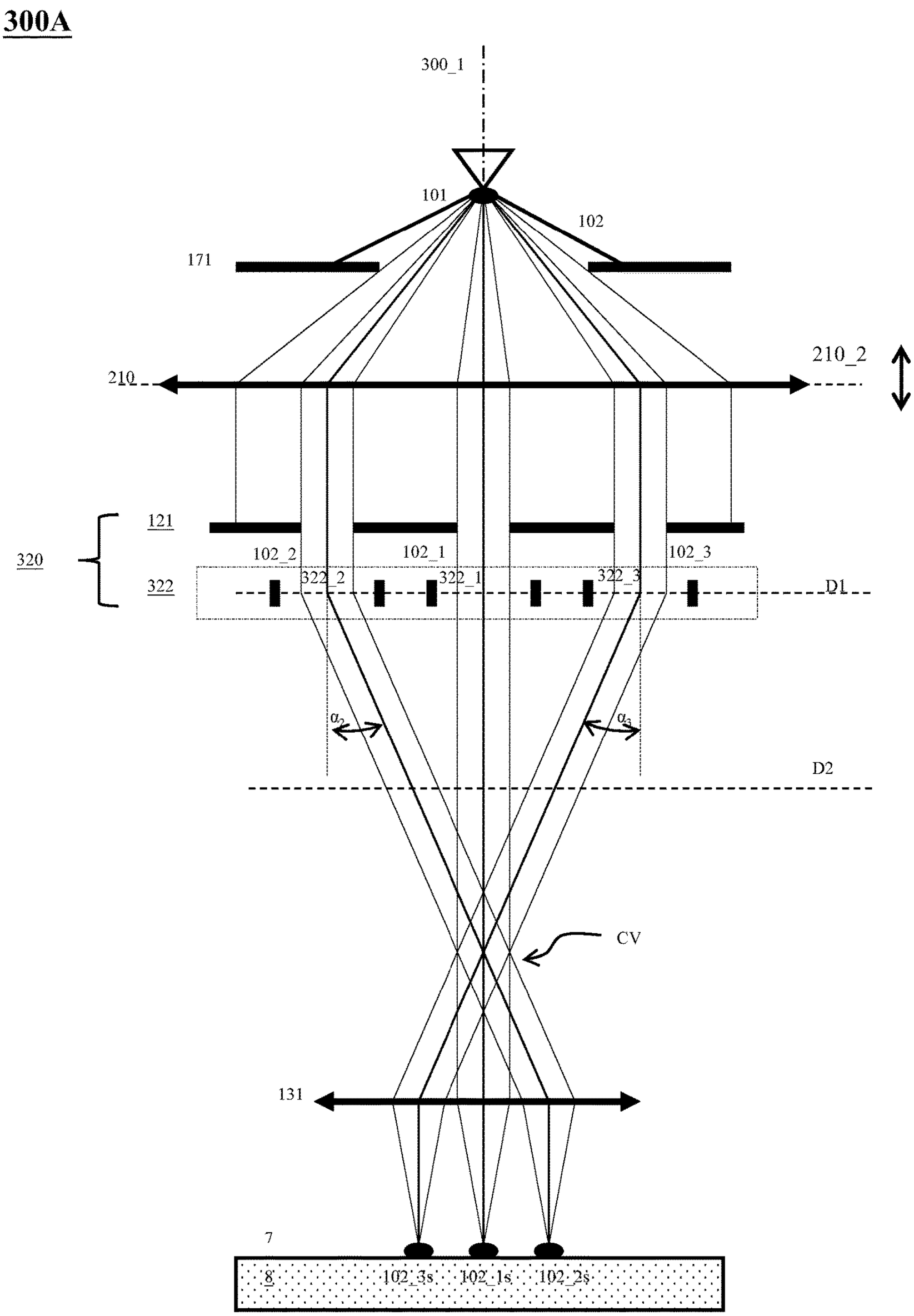
300A
300_1
101
102
171
210
210_2
121
320
322
102_2
102_1
102_3
322_2
322_1
322_3
D1
α2
α3
D2
CV
131
7
8
102_3s
102_1s
102_2s

Figure 3B

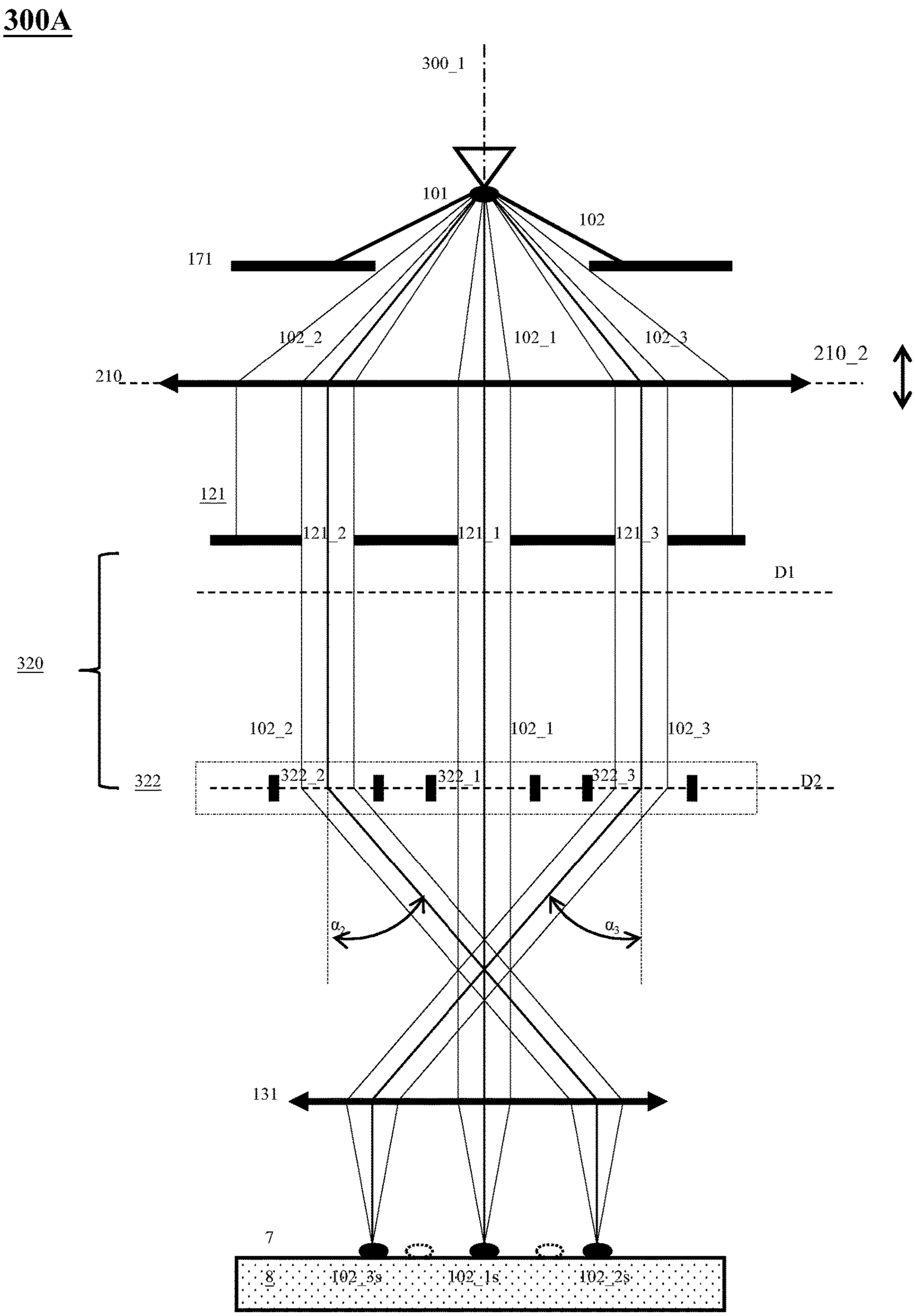
300A
300_1
101
102
171
102_2
102_1
102_3
210
210_2
121
121_2
121_1
121_3
D1
320
102_2
102_1
102_3
322
322_2
322_1
322_3
D2
α2
α3
131
7
8
102_3s
102_1s
102_2s

Figure 3C

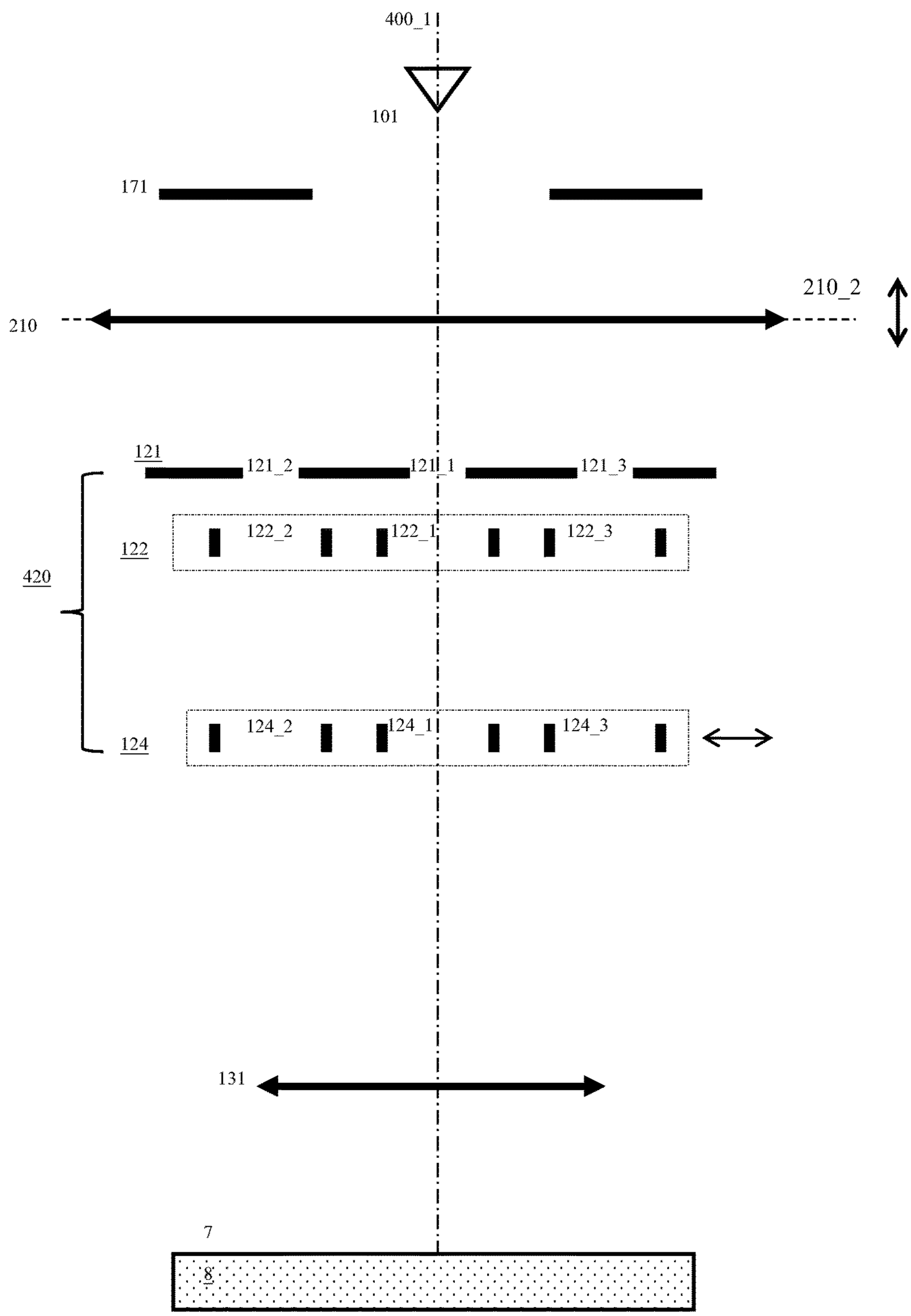
400A
400_1
101
171
210_2
210
121
121_2
121_1
121_3
122
122_2
122_1
122_3
420
124
124_2
124_1
124_3
131
7
8

Figure 4A

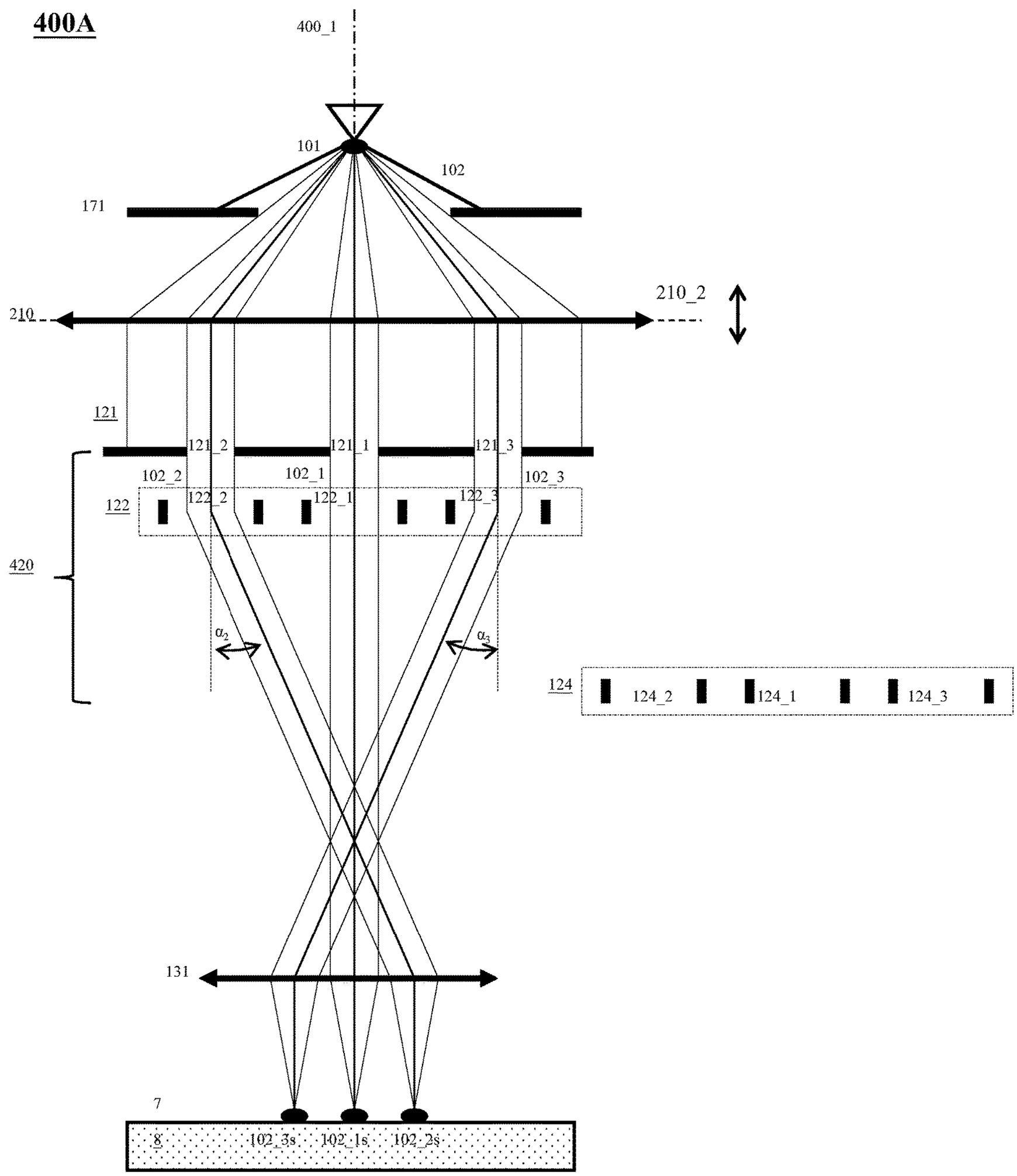
400A
400_1
101
102
171
210
210_2
121
121_2
121_1
121_3
102_2
102_1
102_3
122
122_2
122_1
122_3
420
α2
α3
124
124_2
124_1
124_3
131
7
8
102_3s
102_1s
102_2s

Figure 4B

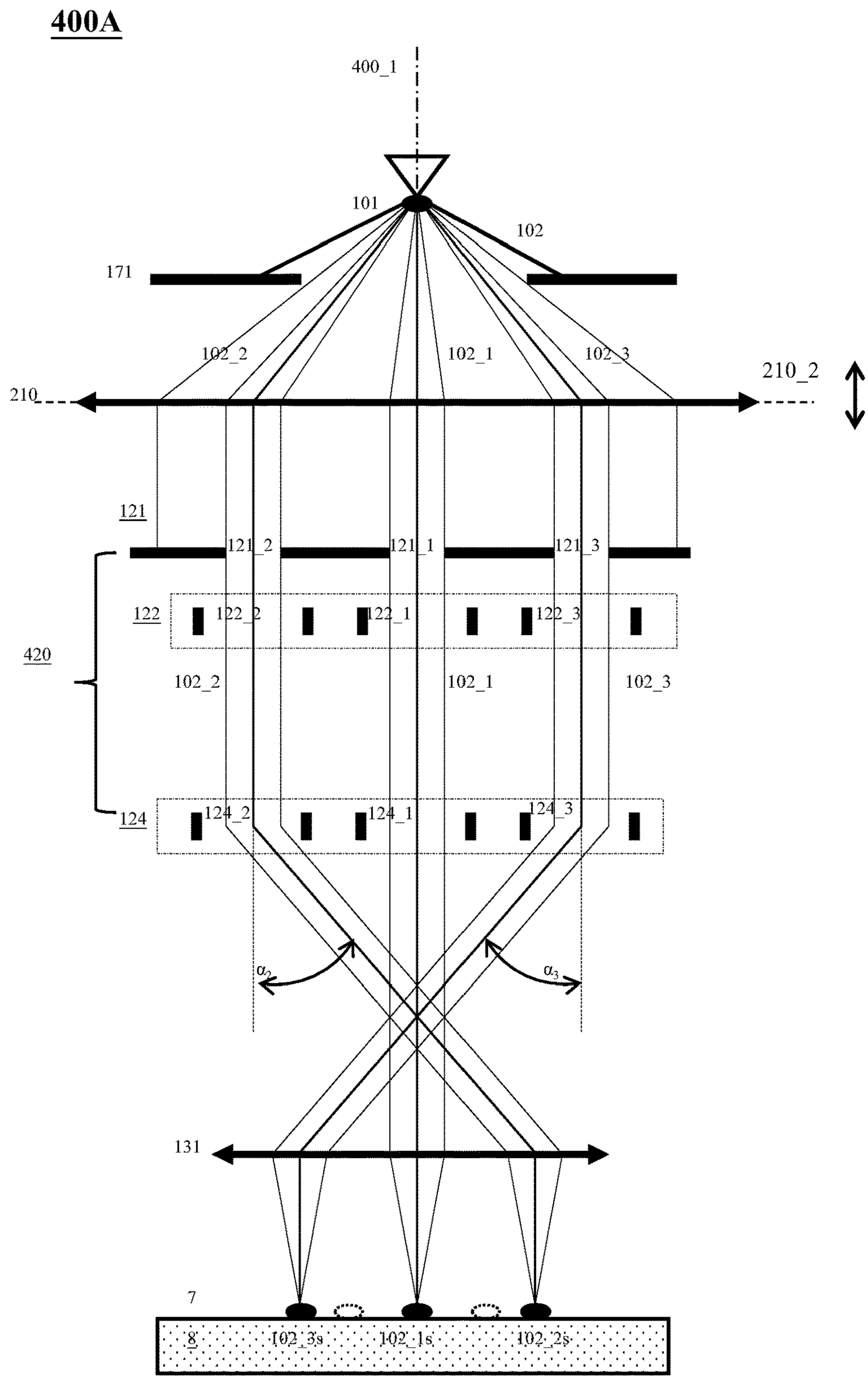
400A
400_1
101
102
171
102_2
102_1
102_3
210
210_2
121
121_2
121_1
121_3
122
122_2
122_1
122_3
420
102_2
102_1
102_3
124
124_2
124_1
124_3
α2
α3
131
7
8
102_3s
102_1s
102_2s

Figure 4C

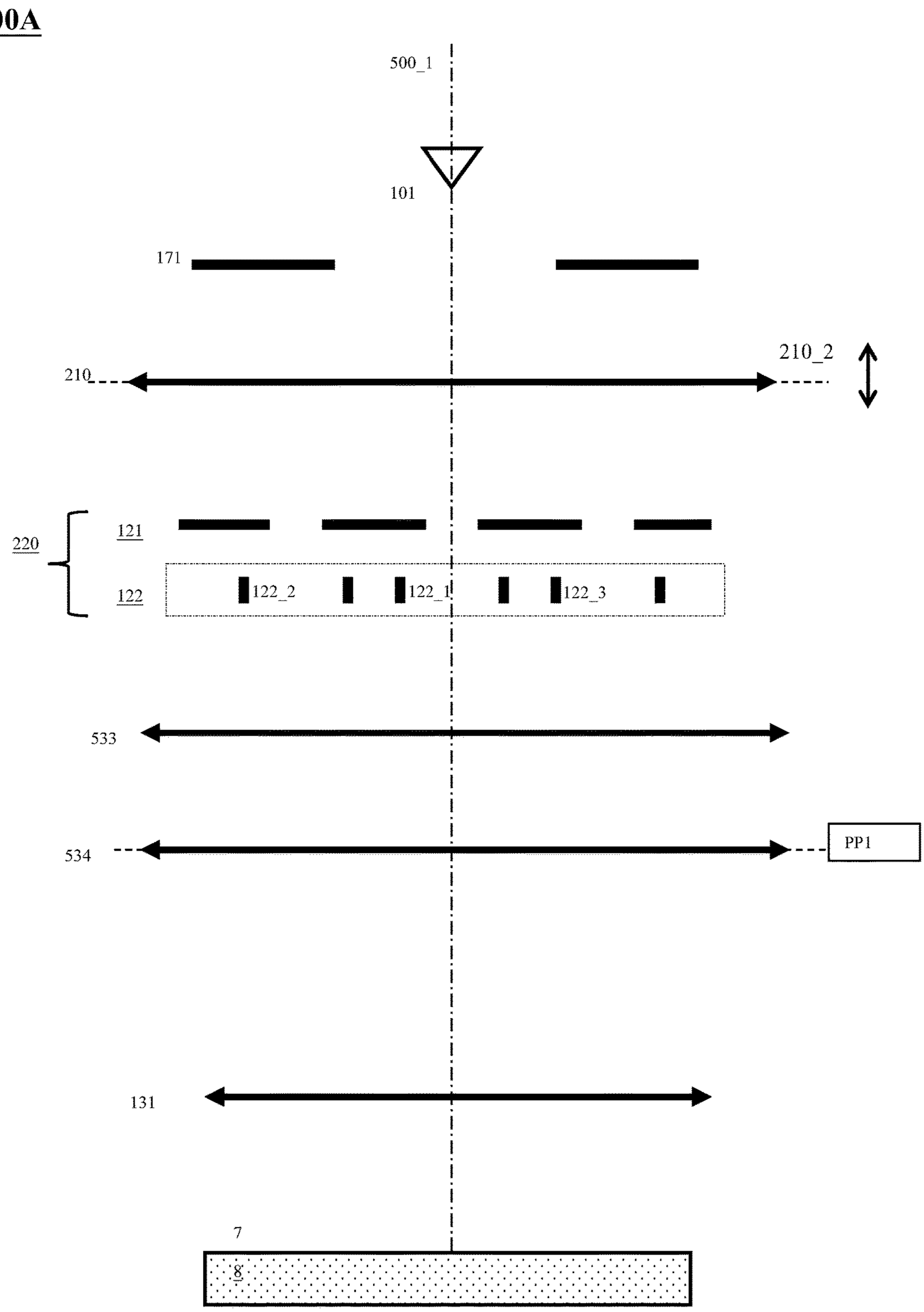
500A
500_1
101
171
210
210_2
220
121
122
122_2
122_1
122_3
533
534
PP1
131
7
8

Figure 5A

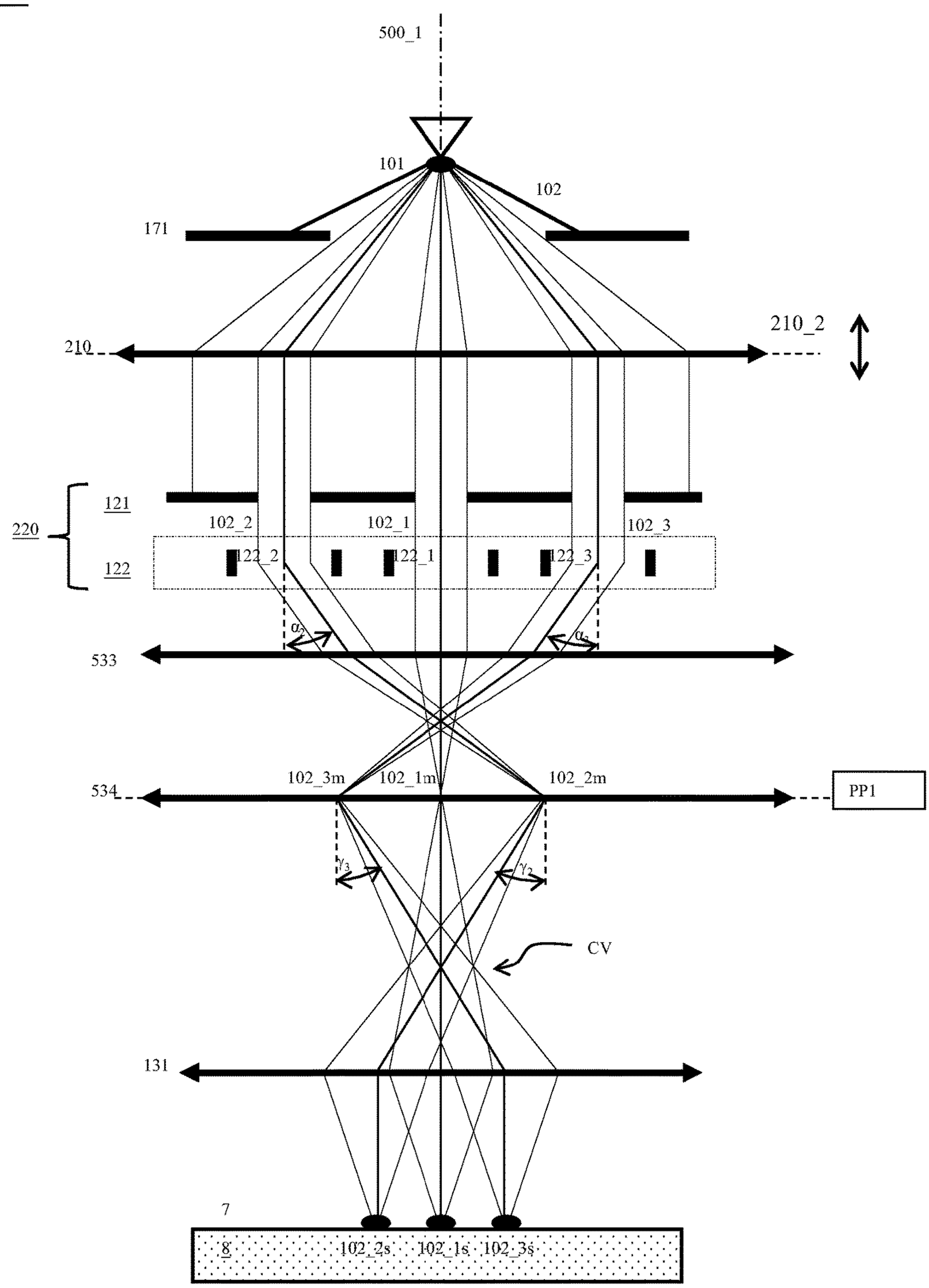
500A
500_1
101
102
171
210
210_2
220
121
122
102_2
102_1
102_3
122_2
122_1
122_3
533
534
102_3m
102_1m
102_2m
PP1
CV
131
7
8
102_2s
102_1s
102_3s

Figure 5B

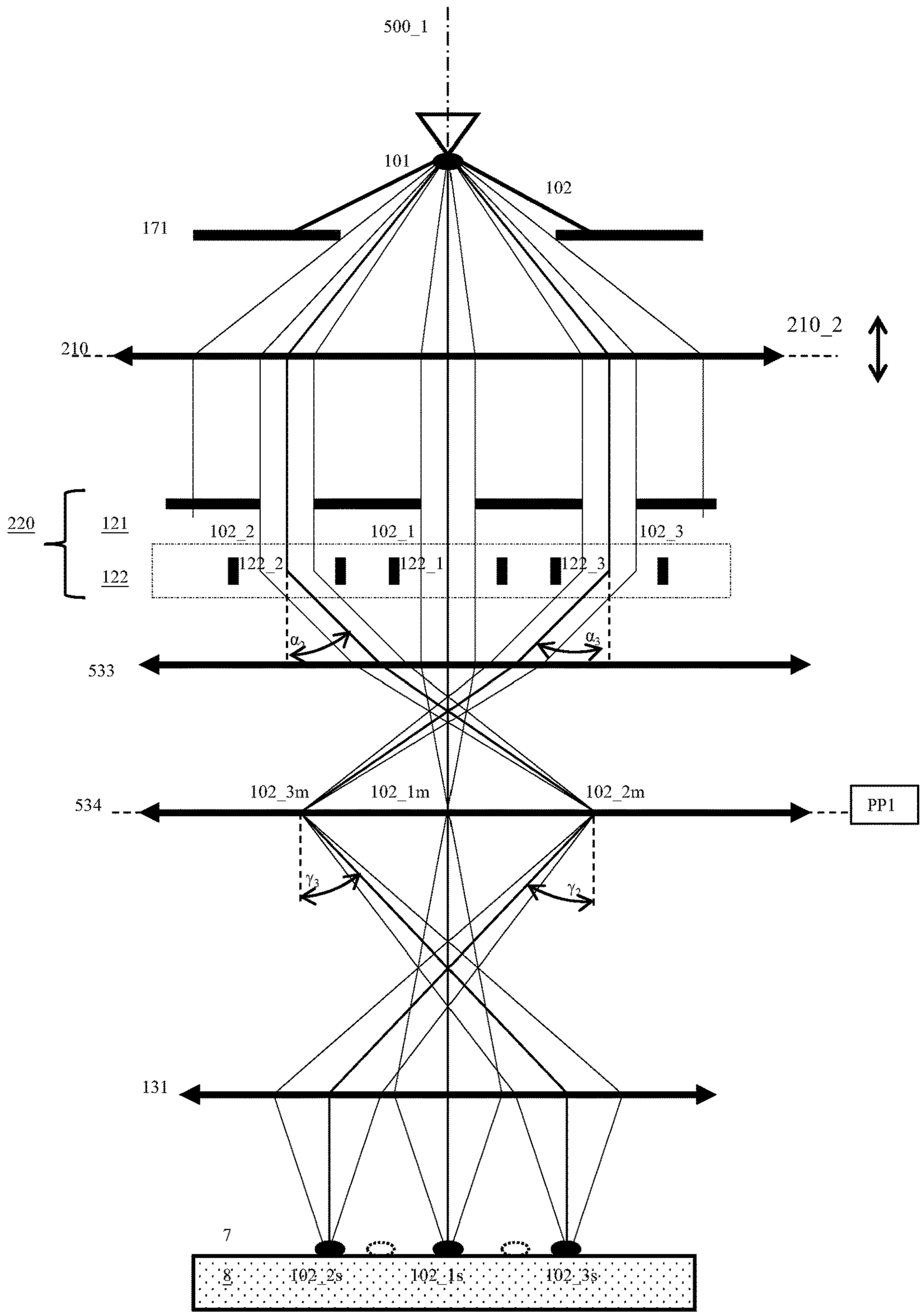
500A
500_1
101
102
171
210
210_2
220
121
122
102_2
102_1
102_3
122_2
122_1
122_3
α2
α3
533
534
102_3m
102_1m
102_2m
PP1
γ3
γ2
131
7
8
102_2s
102_1s
102_3s

Figure 5C

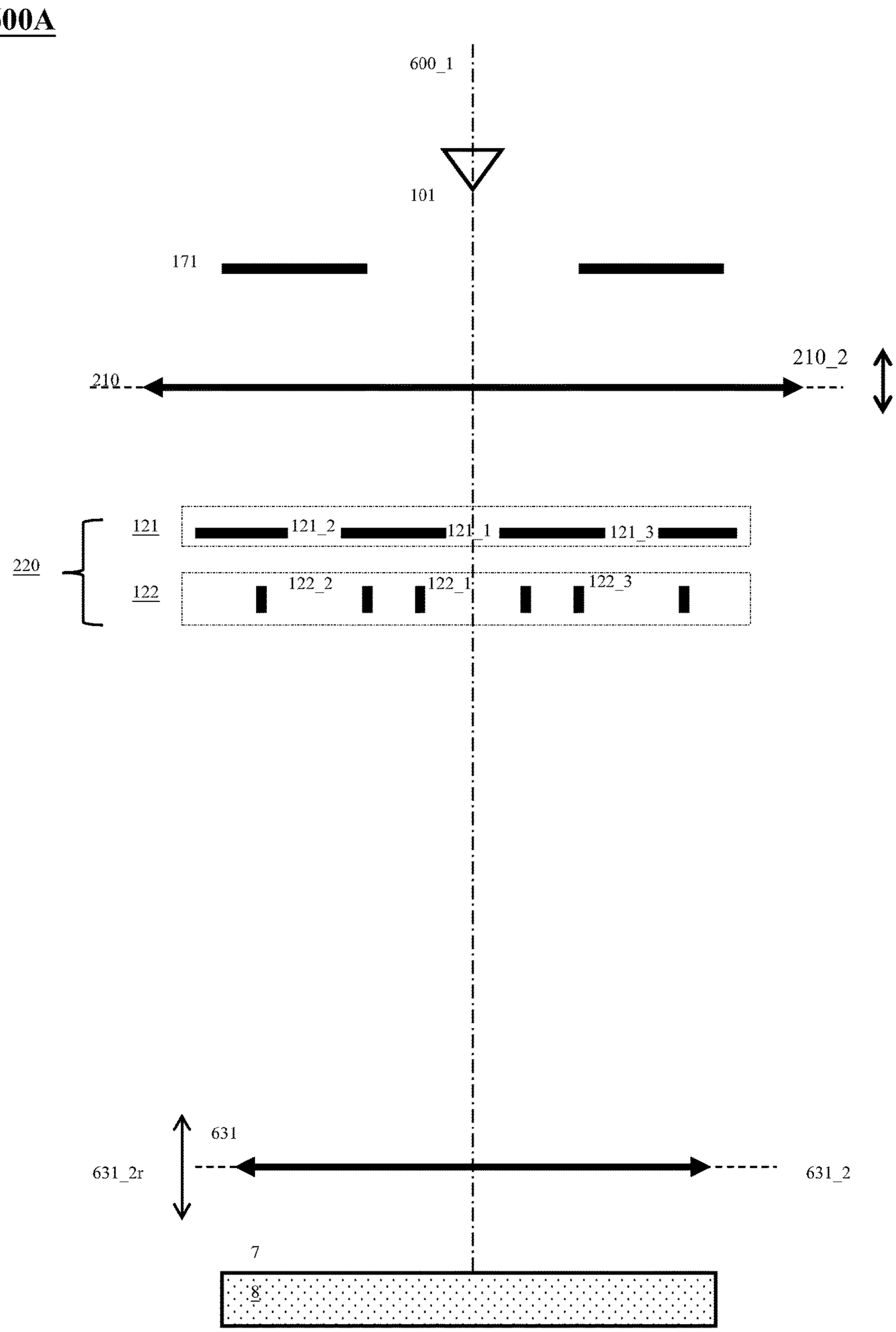
600A
600_1
101
171
210
210_2
121
121_2
121_1
121_3
220
122
122_2
122_1
122_3
631
631_2r
631_2
7
8

Figure 6A

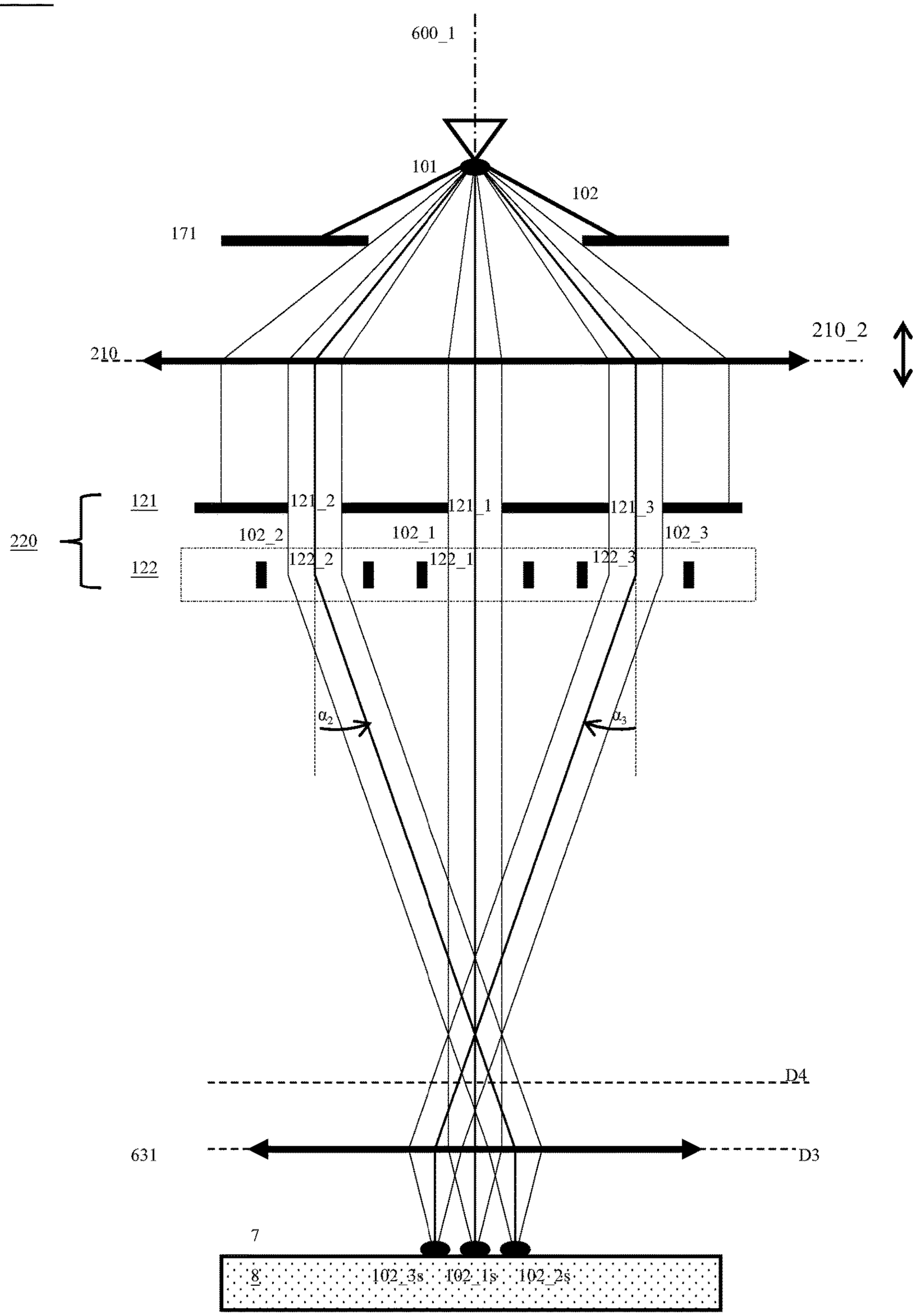
600A
600_1
101
102
171
210
210_2
121
121_2
121_1
121_3
220
102_2
102_1
102_3
122
122_2
122_1
122_3
α2
α3
D4
631
D3
7
8
102_3s
102_1s
102_2s

Figure 6B

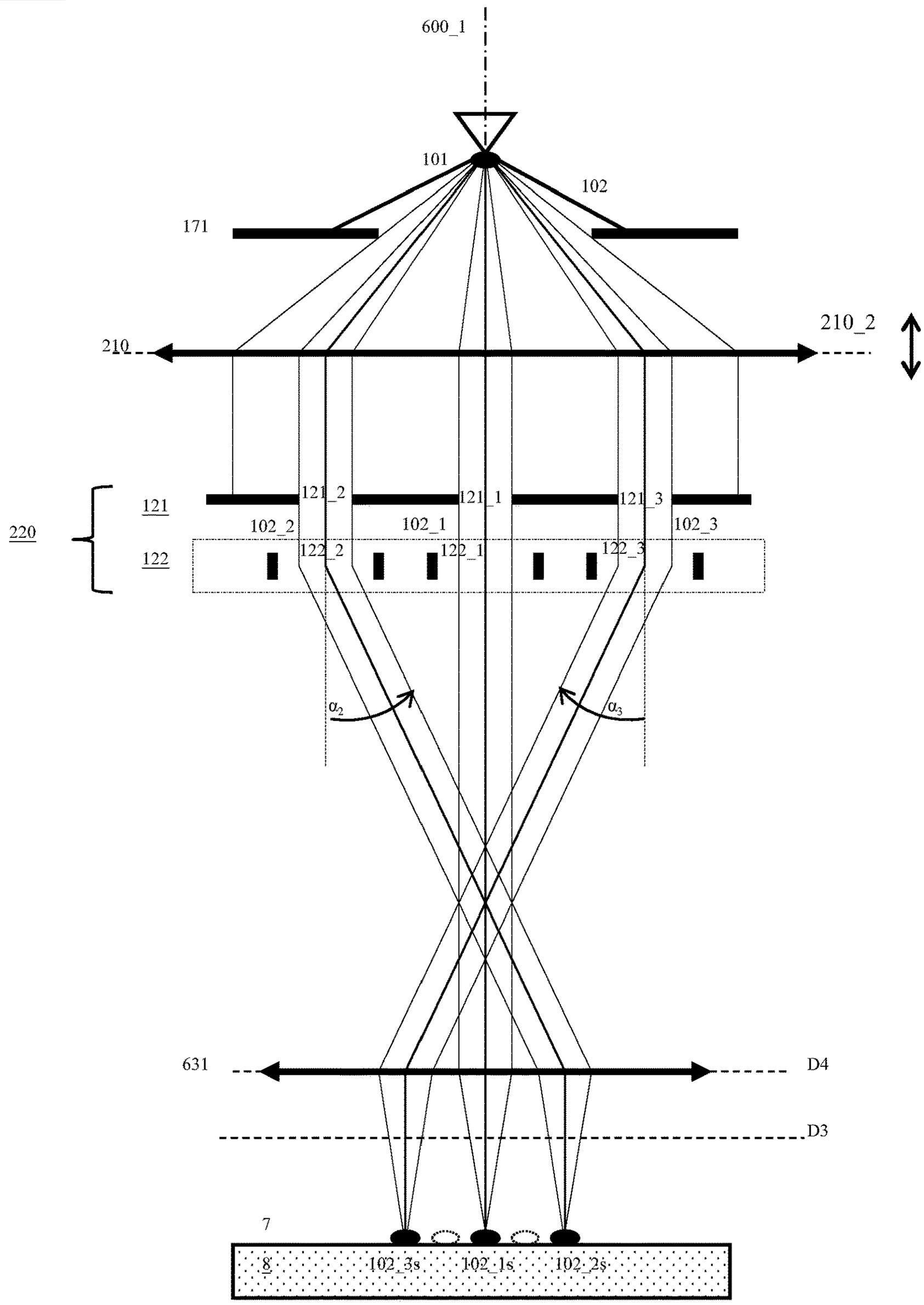
600A
600_1
101
102
171
210
210_2
121
220
122
121_2
121_1
121_3
102_2
102_1
102_3
122_2
122_1
122_3
α2
α3
631
D4
D3
7
8
102_3s
102_1s
102_2s

Figure 6C

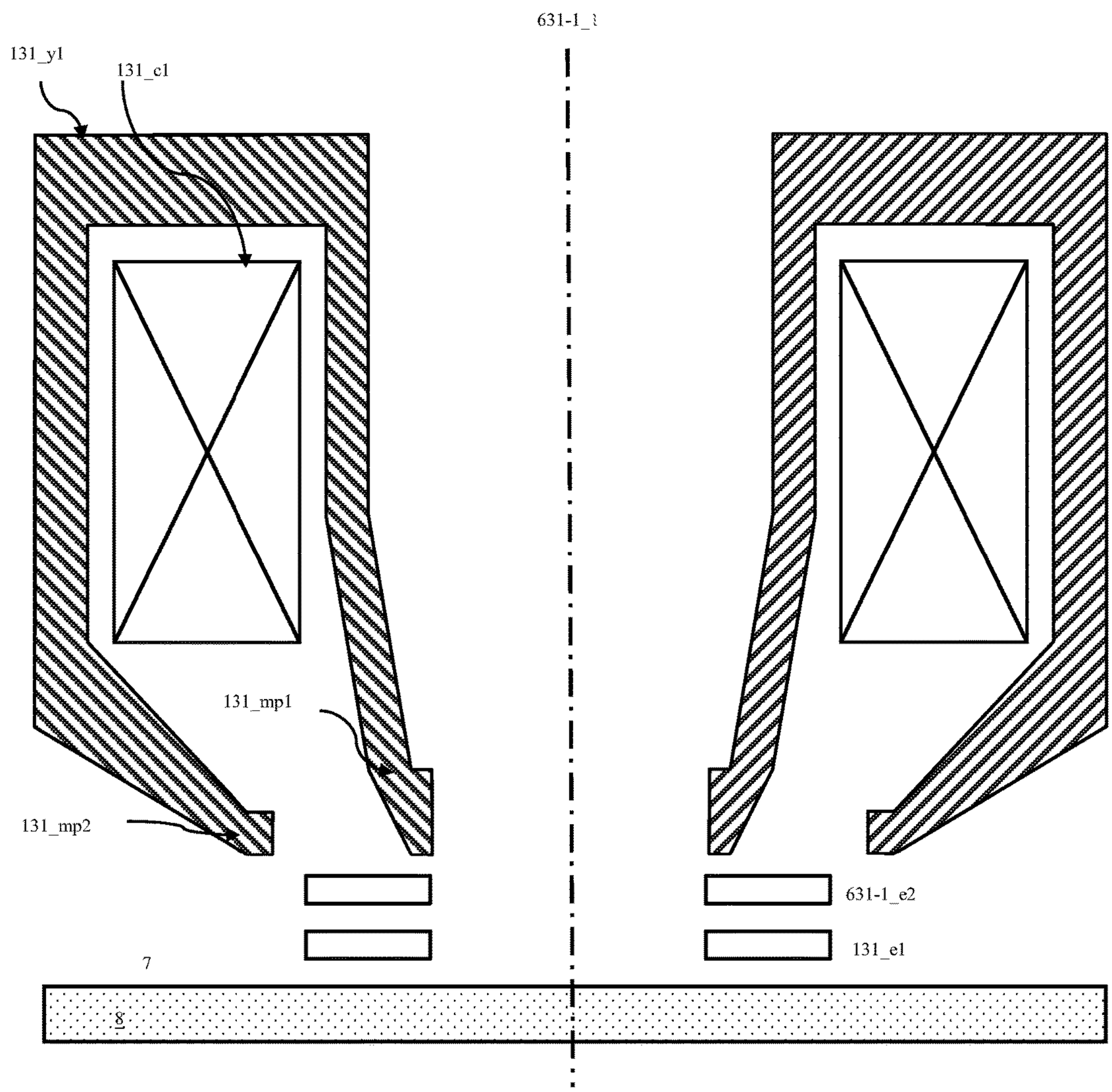

Figure 7A

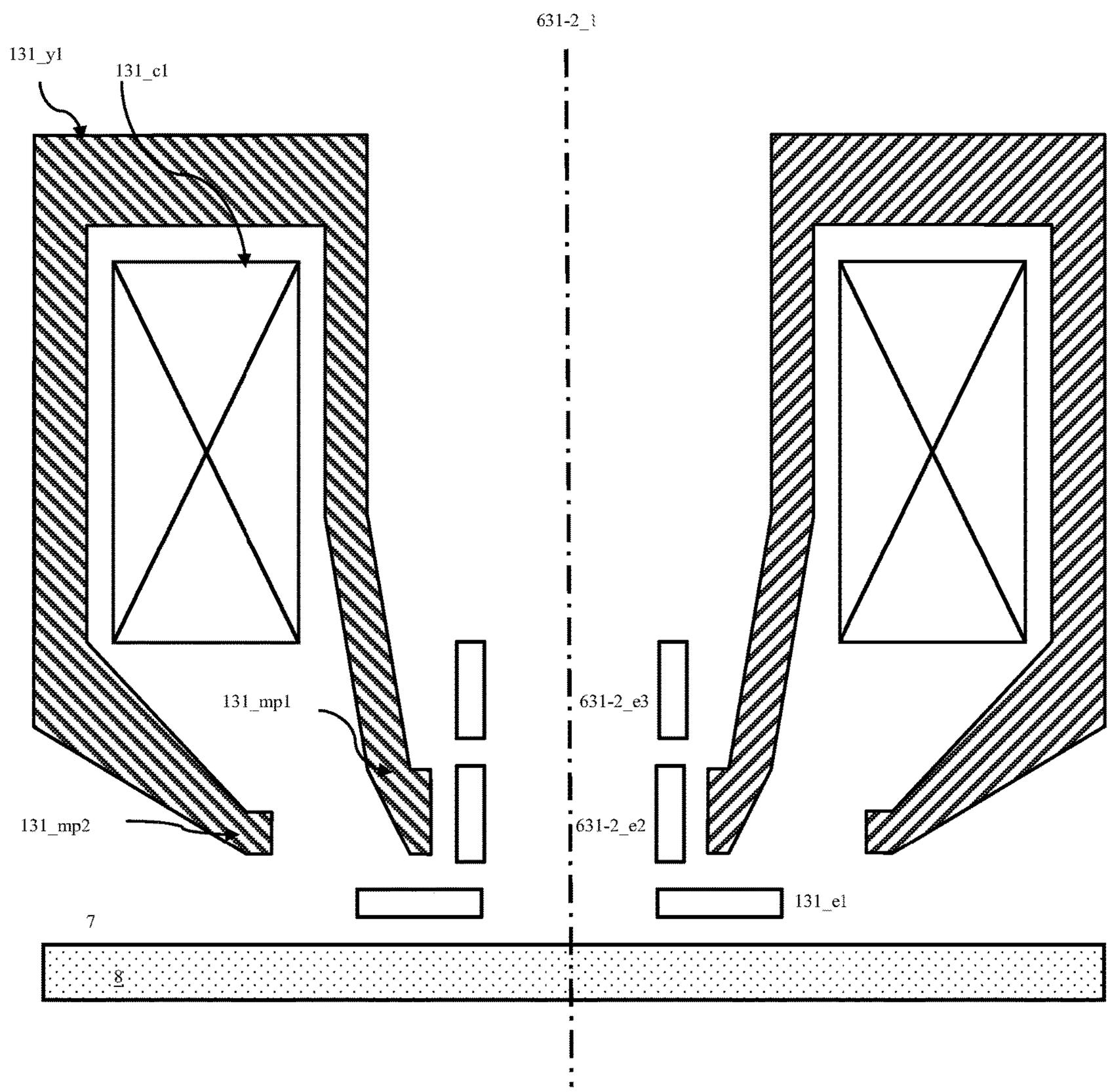
631-2
631-2_3
131_y1
131_c1
131_mp1
131_mp2
631-2_e3
631-2_e2
131_e1
7
8

Figure 7B

631-3

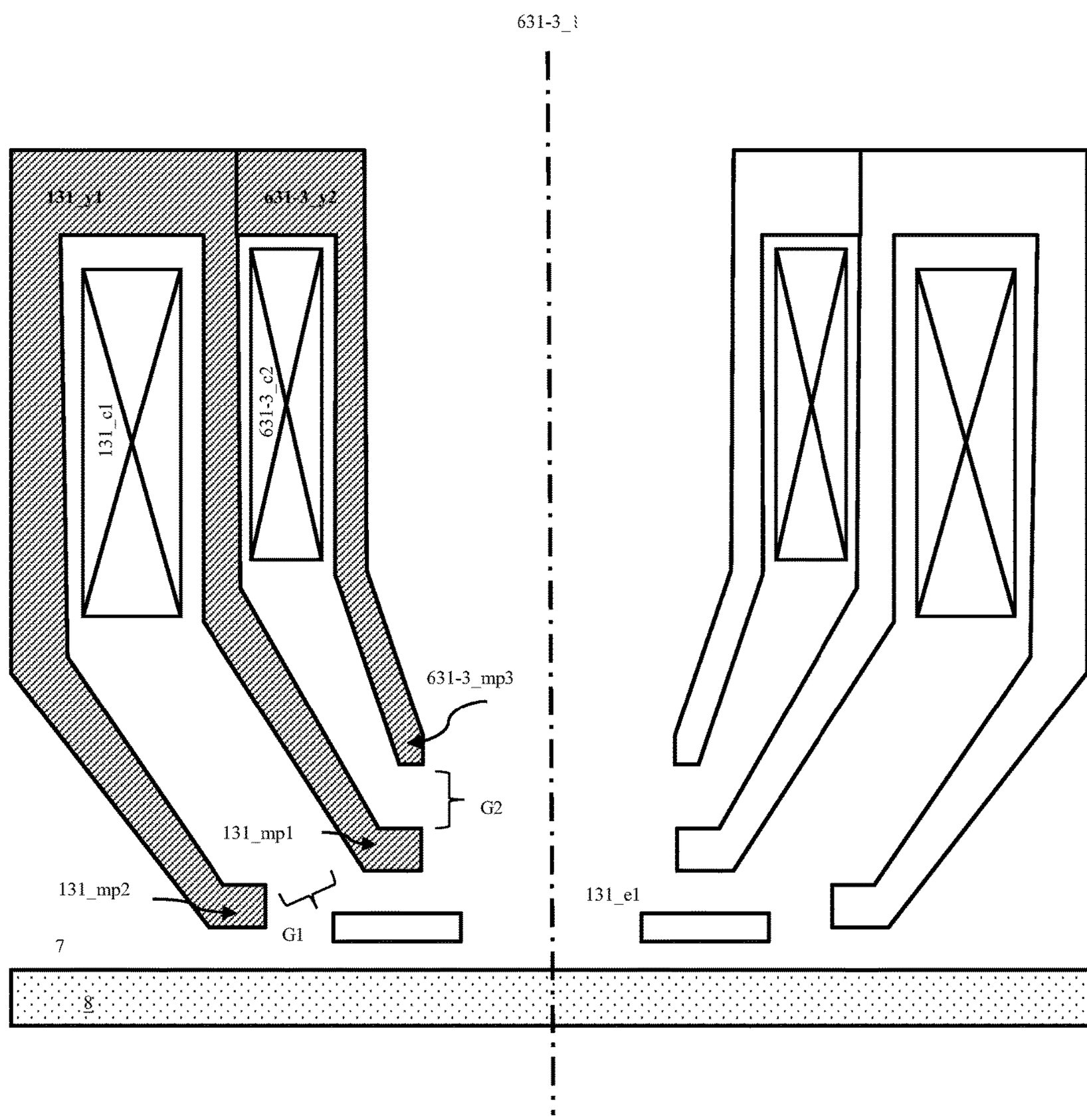

Figure 7C

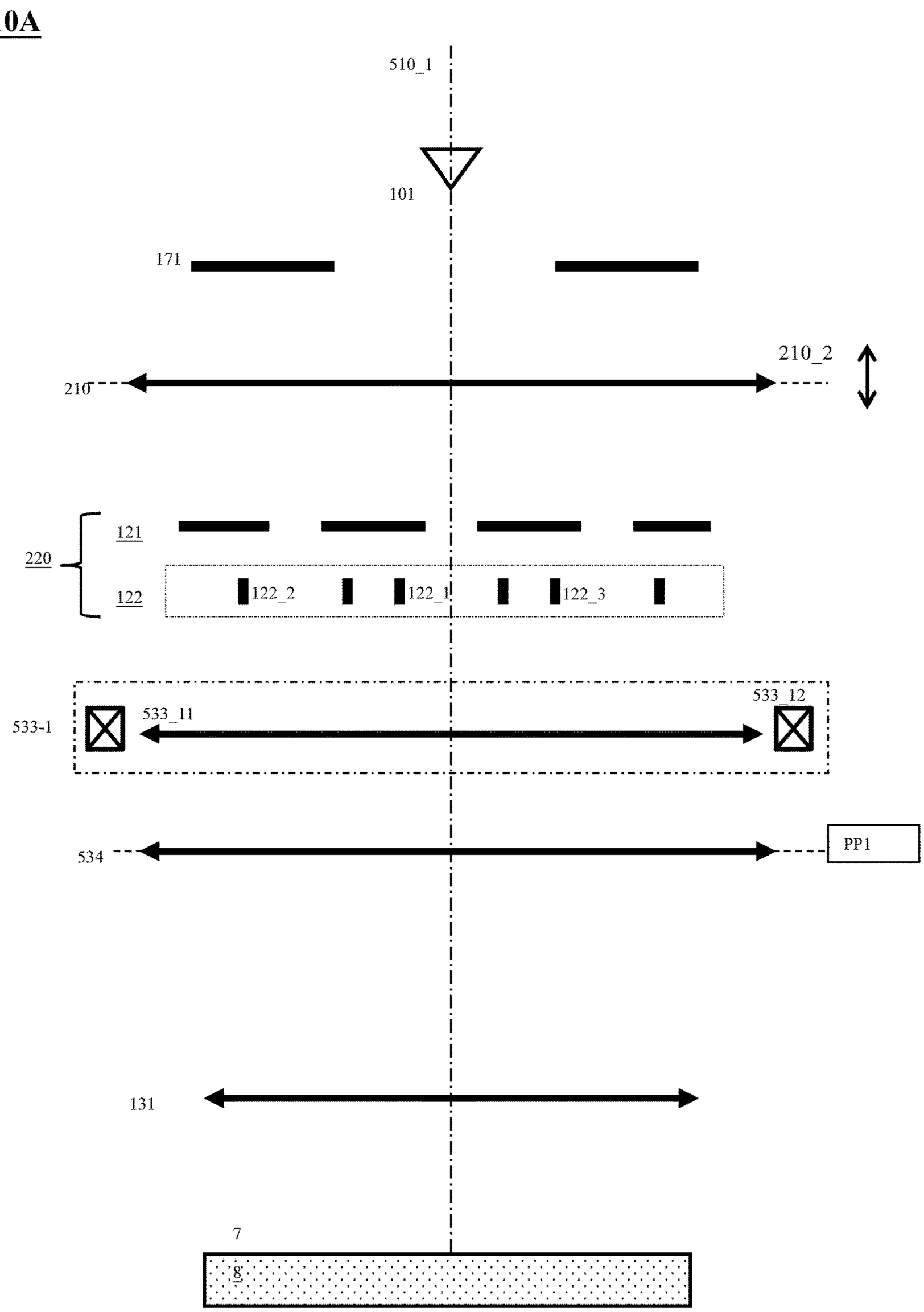
510A
510_1
101
171
210
210_2
220
121
122
122_2
122_1
122_3
533-1
533_11
533_12
534
PP1
131
7
8

Figure 8A

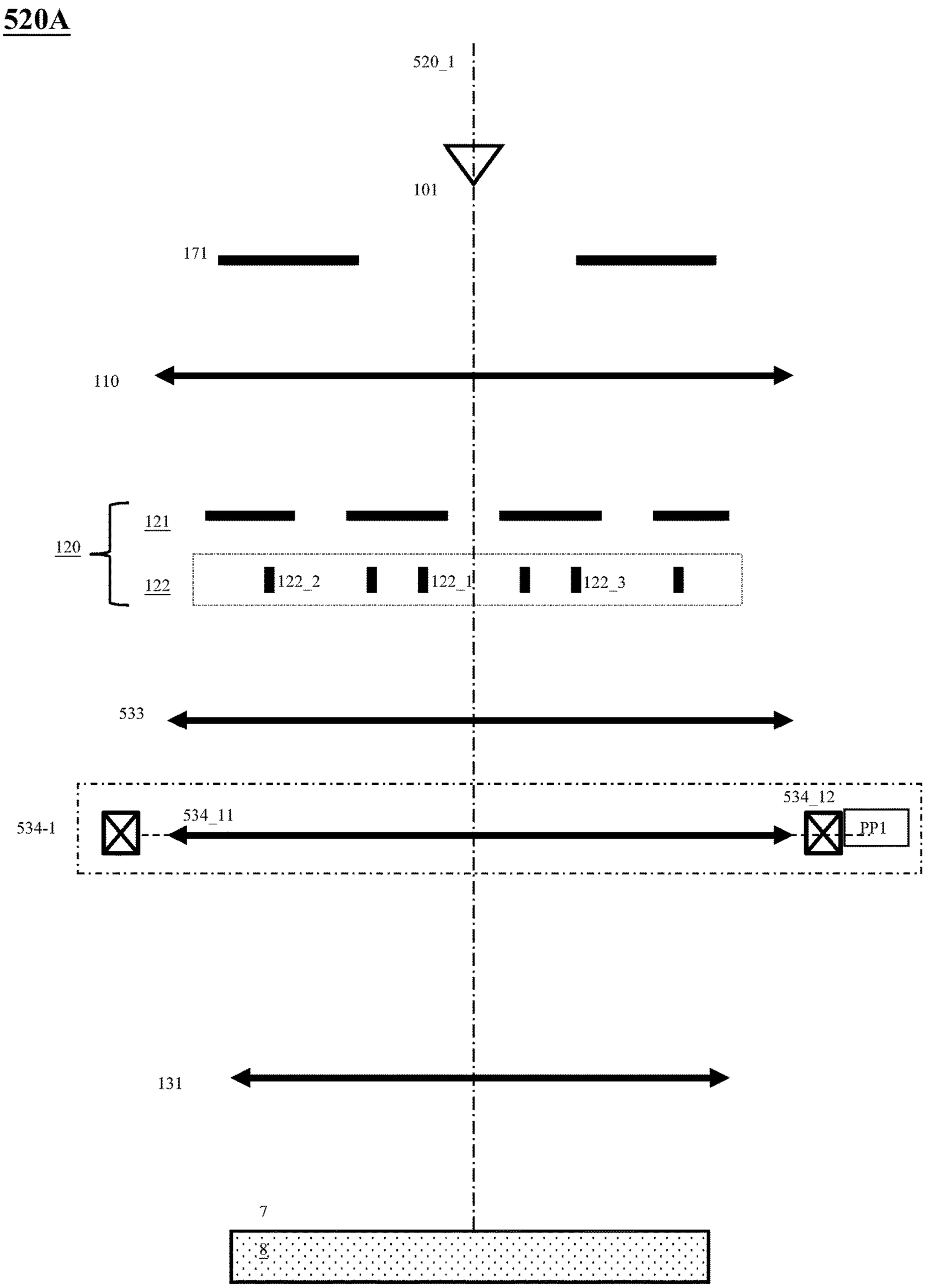
520A
520_1
101
171
110
121
120
122
122_2
122_1
122_3
533
534-1
534_11
534_12
PP1
131
7
8

Figure 8B

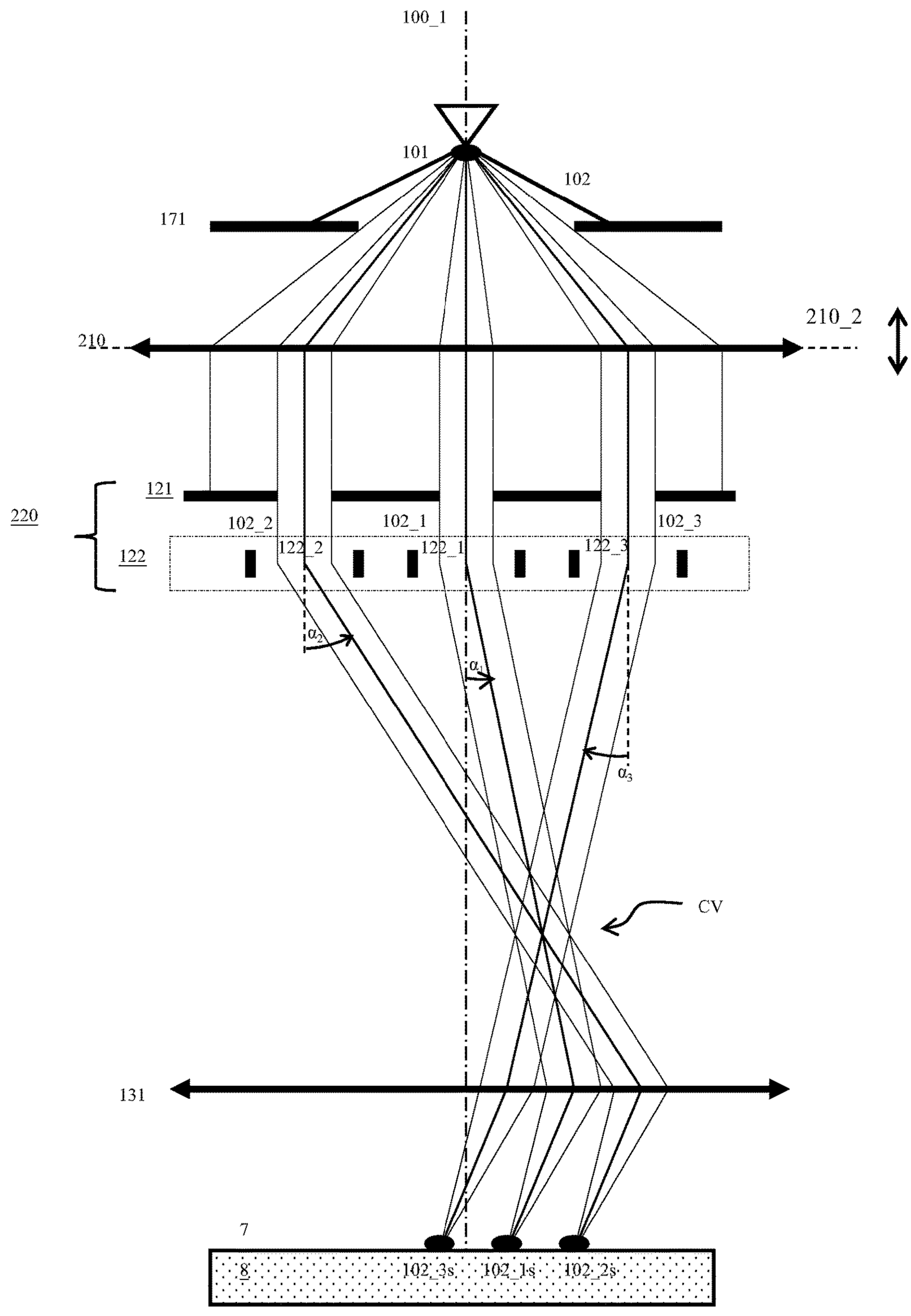
100A
100_1
101
102
171
210
210_2
121
220
122
102_2
102_1
102_3
122_2
122_1
122_3
α2
α1
α3
CV
131
7
8
102_3s
102_1s
102_2s

Figure 9A

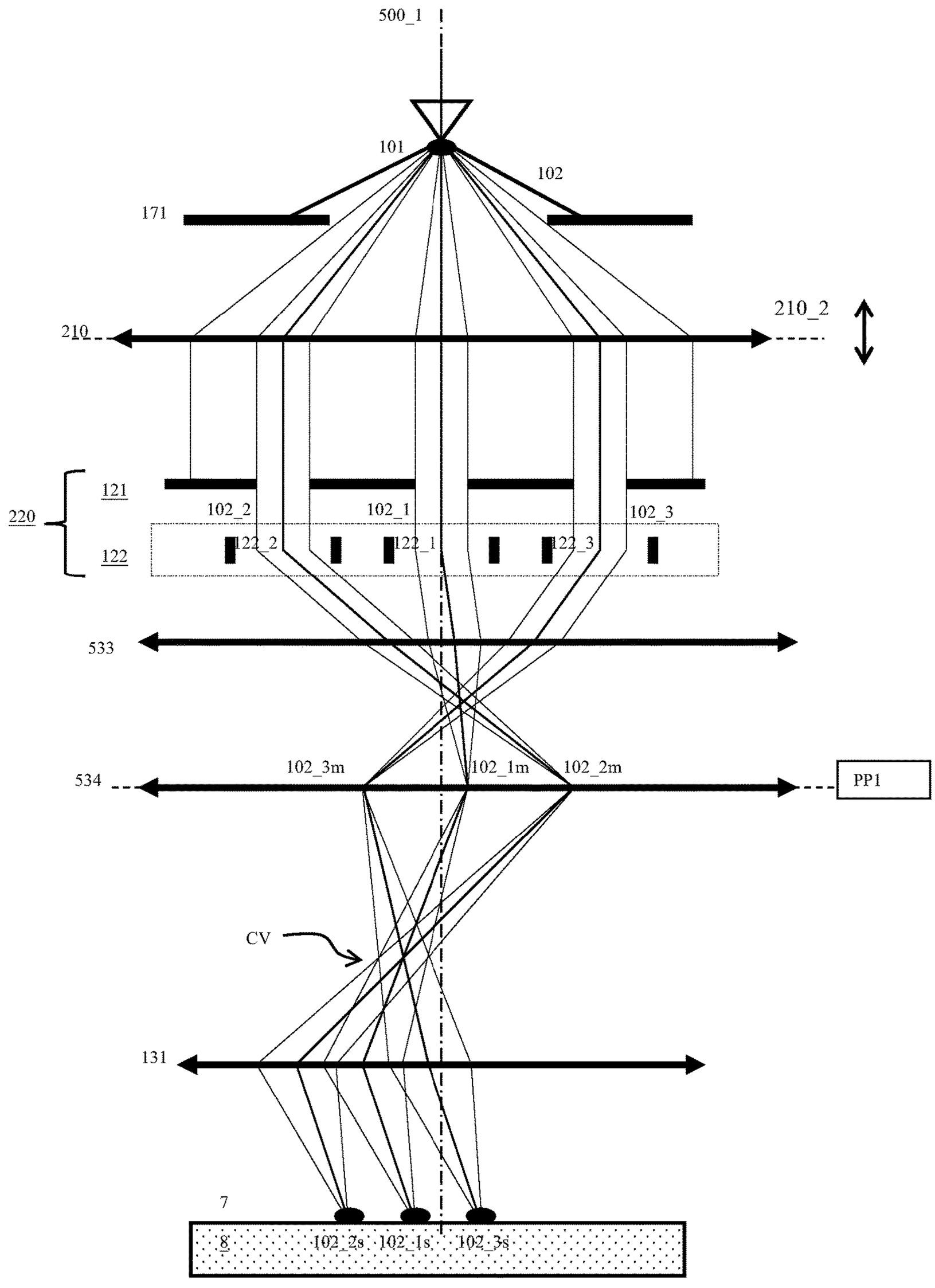
500A
500_1
101
102
171
210
210_2
220
121
122
102_2
102_1
102_3
122_2
122_1
122_3
533
534
102_3m
102_1m
102_2m
PP1
CV
131
7
8
102_2s
102_1s
102_3s

Figure 9B

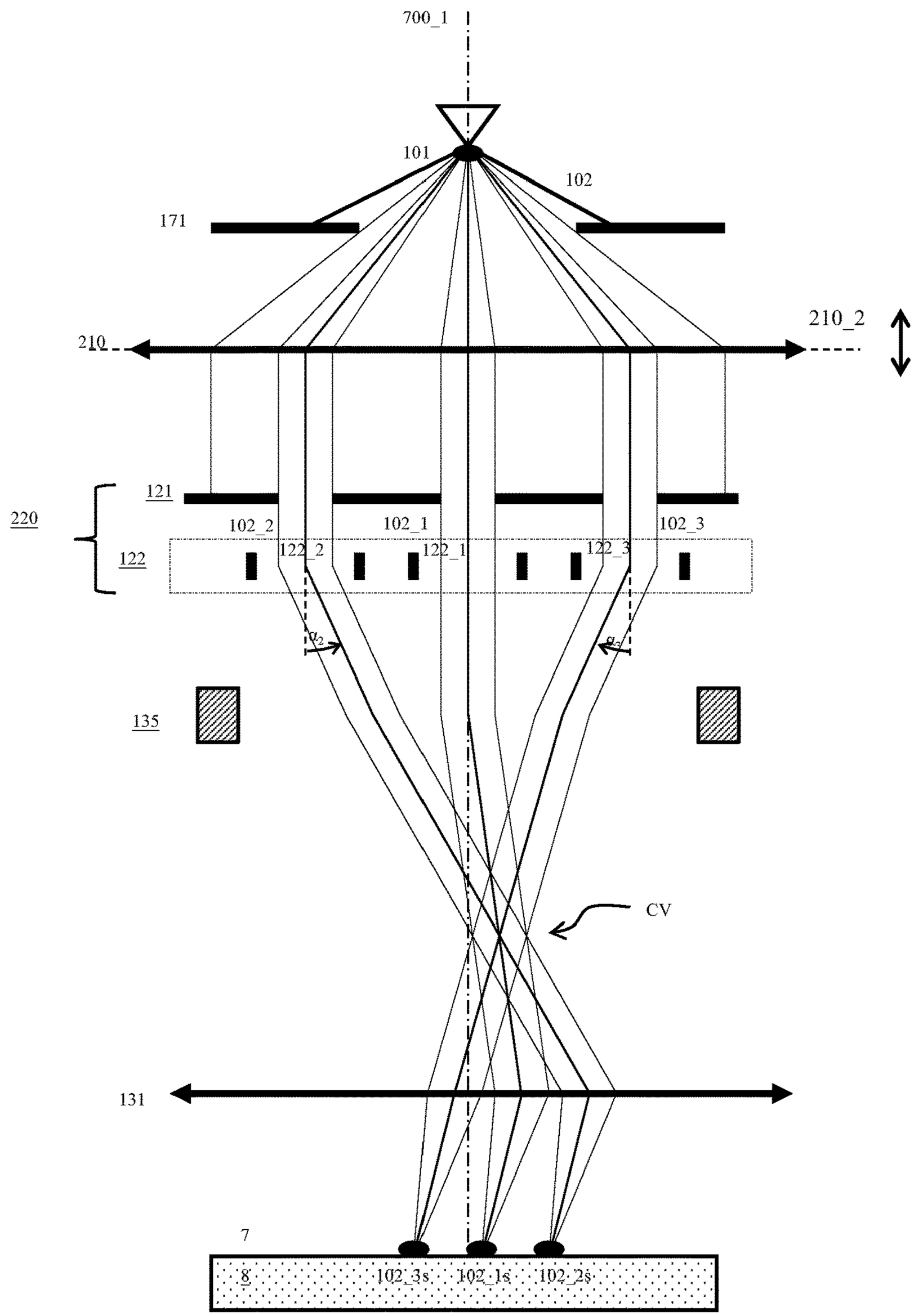
700A
700_1
101
102
171
210
210_2
121
220
122
102_2
102_1
102_3
122_2
122_1
122_3
α_2
α_2
135
CV
131
7
8
102_3s
102_1s
102_2s

Figure 10

APPARATUS OF PLURAL CHARGED-PARTICLE BEAMS

Matter enclosed in heavy brackets [ ] appears in the original patent but forms no part of this reissue specification; matter printed in italics indicates the additions made by reissue; a claim printed with strikethrough indicates that the claim was canceled, disclaimed, or held invalid by a prior post-patent action or proceeding.

CLAIM OF PRIORITY

This **[**application**]** *is a reissue of U.S. Pat. No. 10,062,541 B2, issued on Aug. 28, 2018, from U.S. patent application Ser. No. 15/417,360, filed Jan. 27, 2017, which* claims the benefit of priority of U.S. provisional application No. 62/287,626 entitled to Ren et al. filed on Jan. 27, 2016 and entitled "Apparatus of Plural Charged-Particle Beams"**[**, the entire disclosures of which are incorporated herein by reference**]**. *The contents of the above-identified applications are incorporated herein by reference in their entireties.*

CROSS REFERENCE TO RELATED APPLICATIONS

This application is related to U.S. application Ser. No. 15/065,342 entitled to Ren et al. filed on Mar. 9, 2016 and entitled "Apparatus of Plural Charged-Particle Beams", the entire disclosures of which are incorporated herein by reference

This application is related to U.S. application Ser. No. 15/078,369 entitled to Ren et al. filed on Mar. 23, 2016 and entitled "Apparatus of Plural Charged-Particle Beams", the entire disclosures of which are incorporated herein by reference.

This application is related to U.S. application Ser. No. 15/150,858 entitled to Liu et al. filed on May 10, 2016 and entitled "Apparatus of Plural Charged-Particle Beams", the entire disclosures of which are incorporated herein by reference.

This application is related to U.S. application Ser. No. 15/213,781 entitled to Li et al. filed on Jul. 19, 2016 and entitled "Apparatus of Plural Charged-Particle Beams", the entire disclosures of which are incorporated herein by reference.

This application is related to U.S. application Ser. No. 15/216,258 entitled to Ren et al. filed on Jul. 21, 2016 and entitled "Apparatus of Plural Charged-Particle Beams", the entire disclosures of which are incorporated herein by reference.

This application is related to U.S. application Ser. No. 15/365,145 entitled to Ren et al. filed on Nov. 30, 2016 and entitled "Apparatus of Plural Charged-Particle Beams", the entire disclosures of which are incorporated herein by reference.

BACKGROUND OF THE INVENTION

1. Field of the Invention

The present invention relates to an apparatus with a plurality of charged-particle beams. More particularly, it relates to an apparatus which employs plural charged-particle beams to simultaneously acquire images of plural scanned regions within an observed area on a sample surface. Hence, the apparatus can be used to inspect and/or

review defects on wafers/masks with high resolution and high throughput in semiconductor manufacturing industry.

2. Description of the Prior Art

The following description and examples are not admitted to be prior art by their mention in this Background section. For manufacturing semiconductor IC chips, pattern defects and/or uninvited particles (residuals) inevitably appear on surfaces of wafers/mask during fabrication processes, which reduce the yield to a great degree. Accordingly, the yield management tools are used to inspect and/or review the defects and the particles. To meet the more and more advanced requirements on performance of IC chips, the patterns with smaller and smaller critical feature dimensions have been adopted. Consequently, the conventional yield management tools with optical beam gradually become incompetent due to diffraction effect, and the yield management tools with electron beam are more and more employed. Compared to a photon beam, an electron beam has a shorter wavelength and thereby possibly offering superior spatial resolution. Currently, the yield management tools with electron beams employ the principle of scanning electron microscope (SEM) with a single electron beam, and as well known their throughputs are not competent for mass production. Although increasing the beam currents can improve the throughputs, the superior spatial resolutions will be fundamentally deteriorated by Coulomb Effect which increases with the beam currents.

For mitigating the limitation on throughput, instead of using a single electron beam with a large current, a promising solution is to use a plurality of electron beams each with a small current. The plurality of electron beams forms a plurality of probe spots or simply called as a probe spot array on one being-inspected or observed surface of a sample. The plurality of probe spots can respectively and simultaneously scan a plurality of small scanned regions within a large observed area on the sample surface. The electrons of each probe spot generate secondary electrons from the sample surface where they land on. The secondary electrons comprise slow secondary electrons (energies ≤50 eV) and backscattered electrons (energies close to landing energies of the electrons). The secondary electrons from the plurality of small scanned regions can be respectively and simultaneously collected by a plurality of electron detectors. Consequently, the image of the large observed area including all of the small scanned regions can be obtained much faster than scanning the large observed area with a single beam.

The plurality of electron beams can be either from a plurality of electron sources respectively, or from a single electron source. For the former, the plurality of electron beams is usually focused onto and scans the plurality of small scanned regions by a plurality of columns respectively, and the secondary electrons from each scanned region are detected by one electron detector inside the corresponding column. The apparatus therefore is generally called as a multi-column apparatus. On the sample surface, the beam interval or pitch is on the order of several to tens millimeters.

For the latter, a source-conversion unit virtually changes the single electron source into a plurality of sub-sources. The source-conversion unit comprises one beamlet-limit (or beamlet-forming) means with a plurality of beam-limit openings and one image-forming means with a plurality of electron optics elements. The plurality of beam-limit openings divides the primary-electron beam generated by the single electron source into a plurality of sub-beams or beamlets respectively, and the plurality of electron optics elements influence the plurality of beamlets to form a

plurality of first parallel (virtual or real) images of the single electron source respectively. Each first image is the cross-over of one beamlet and can be taken as one sub-source which emits the corresponding beamlet. To make more beamlets available, the beamlet intervals are at micro meter level. Naturally, one primary projection imaging system and one deflection scanning unit within one single column are used to project the plurality of first parallel images onto and scan the plurality of small scanned regions respectively. The plurality of secondary electron beams therefrom is directed by one beam separator into one secondary projection imaging system, and then focused by the secondary projection imaging system to be respectively detected by a plurality of detection elements of one electron detection device inside the single column. The plurality of detection elements can be a plurality of electron detectors placed side by side or a plurality of pixels of one electron detector. The apparatus therefore is generally called as a multi-beam apparatus

The beamlet-limit means is usually an electric-conduction plate with through-holes, and a plurality of through-holes therein functions the plurality of beam-limit openings respectively. For the image-forming means, each electron optics element either focuses one beamlet to form one real image (such as U.S. Pat. No. 7,244,949 and the fourth related application in the CROSS REFERENCE), or deflects one beamlet to form one virtual image (such as U.S. Pat. No. 6,943,349 and the other related applications in the CROSS REFERENCE). FIG. **1**A and FIG. **1**B show two examples in the fifth related application. For sake of clarity, only three beamlets are shown, and the deflection scanning unit, the beam separator, the secondary projection imaging system and the electron detection device are not shown.

In FIG. **1**A, the primary-electron beam **102** generated by the electron source **101** is focused by the condenser lens **110** to be incident onto the source-conversion unit **120**. The source-conversion unit **120** comprises one pre-beamlet-bending means **123** with three pre-bending micro-deflectors **123_1**, **123_2** and **123_3**, one beamlet-limit means **121** with three beam-limit openings **121_1**, **121_2** and **121_3** and one image-forming means **122** with three electron optics elements **122_1**, **122_2** and **122_3**. The three pre-bending micro-deflectors **123_1**~**123_3** respectively deflect the three beamlets **102_1**~**102_3** perpendicularly incident onto the three beam-limit openings **121_1**~**121_3**, and each of which functions as a beam-limit aperture to limit the current of the corresponding beamlet. The three electron optics elements **122_1**~**122_3** deflects the three beamlets **102_1**~**102_3** towards the primary optical axis **100_1** and form three first virtual images of the electron source **101**, i.e. each beamlet has a virtual crossover. The objective lens constitutes the primary projection imaging system, which focuses the three deflected beamlets **102_1**~**102_3** onto the surface **7** of the sample **8**, i.e. projecting the three first virtual images thereon. The three beamlets **102_1**~**102_3** therefore form three probe spots **102_1**s, **102_2**s and **102_3**s on the surface **7**. The currents of the probe spots **102_1**s~**102_3**s can be varied by adjusting the focusing power of the condenser lens **110**. In FIG. **1**B, the movable condenser lens **210** focuses the primary-electron beam **102** to be normally incident onto the beamlet-limit means **121** of the source-conversion unit **220**, and the pre-beamlet-bending means **123** in FIG. **1**A is therefore not needed. Accordingly the currents of the probe spots **102_1**s-**102_3**s can be varied by adjusting the focusing power and the position of the movable condenser lens **210**. In FIG. **1**A and FIG. **1**B, the landing energies of the beamlets **102_1**~**102_3** on the sample surface **7** can be varied by adjusted either or both of the potentials of the electron source **101** and the sample surface **7**.

In a multi-beam apparatus, each beamlet scans one sub-FOV (field of view) on the sample surface, and the total FOV is the sum of the sub-FOVs of the plural beamlets. Each sub-FOV is equal or smaller than the beamlet pitch on the sample surface (Ps in FIG. **1**A). To further improve the throughput, each sub-FOV is better selectable in terms of the imaging resolution and the pitches of the plural beamlets are accordingly varied to keep the sub-FOVs stitched up. In one case with high image resolution, a small pixel size will be used and a small sub-FOV is desired for avoiding a large pixel number. In another case with low image resolution, a large pixel size will be used and a large sub-FOV is desired for a high throughput. FIG. **2**A shows an example in the later case. As shown in dash line, if the probe spots **102_2**s and **102_3**s in FIG. **1**A can be intentionally moved to the right and the left respectively, i.e. the pitch Ps can be changed from P**1** to P**2**, the total FOV will be increased from 3×P**1** to 3×P**2**, and accordingly the throughput is increased. Hence making the beamlet pitch Ps selectable will be one preferred function.

The continuous scanning mode (a sample continuously moving in the direction perpendicular to a scanning direction of a primary electron beam) is a conventional method to get high throughput in a conventional single-beam apparatus. If using this method in a multi-beam apparatus, it is better to match the orientation of the total FOV or the probe spot array with the stage moving direction. As well known, if there is one magnetic lens in the primary projection imaging system, the magnetic field thereof will rotate the plural beamlets and the total FOV as a result. Due to the magnetic field is varied with respect to the observing conditions (such as landing energies and currents of plural beamlets), the rotation angle of the total FOV will accordingly vary. FIG. **2**B shows an example if the objective lens **131** in FIG. **1**A is a magnetic or electromagnetic compound lens. For instance, when the landing energies of the beamlets **102_1**~**102_3** are changed from 1 keV to 2 keV, the probe spots **102_2**s and **102_3**s will rotate an angle β around the optical axis **100_1** as shown in dash line, i.e. the orientation of the total FOV rotates the angle β. The orientation variation of the total FOV impacts the performance of the continuous scanning mode. Keeping the orientation of the probe spot array same or making it selectable can provide more flexibility to improve the throughput, and accordingly is another preferred function.

For some sample, a specific match between the orientations of patterns thereon and the probe spot array may be required. Making the orientation of the probe spot array selectable can compensate the mismatch due to the limited loading accuracy, and therefore can increase the throughput by avoiding the time-consuming of re-loading. In addition, to effectively observe some patterns of a sample, the plural beamlets may be required to land onto the sample surface with specific incident angles. Making the incident angles selectable can enable more samples or patterns observable, and will be one more preferred function.

The present invention will provide methods to realize the foregoing functions in a multi-beam apparatus, especially for those proposed in the CROSS REFERENCE and used as yield management tools in semiconductor manufacturing industry.

SUMMARY OF THE INVENTION

The object of this invention is to provide a new multi-beam apparatus for observing a sample with high resolution

and high throughput and in flexibly varying observing conditions. Based on the conventional multi-beam apparatuses in the CROSS REFERENCE, this invention proposes several methods to configure the new multi-beam apparatus with a variable total FOV. In the new apparatus, the total FOV can be variable in size, orientation and incident angle. Hence the new apparatus provides more flexibility to speed the sample observation and enable more kinds of samples observable. More specifically, if being used as a yield management tool in semiconductor manufacturing industry to inspect and/or review defects on wafers/masks, the new apparatus can provide more possibilities to achieve a high throughput and detect more kinds of defects.

Accordingly, the invention therefore provides a multi-beam apparatus for observing a surface of a sample, which comprises an electron source, a condenser lens below the electron source, a source-conversion unit below the condenser lens, an objective lens below the source-conversion unit, a deflection scanning unit below the source-conversion unit, a sample stage below the objective lens, a beam separator below the source-conversion unit, a secondary projection imaging system, and an electron detection device with a plurality of detection elements. The electron source, the condenser lens and the objective lens are aligned with a primary optical axis of the apparatus, and the sample stage sustains the sample so that the surface faces to the objective lens. The source-conversion unit comprises a beamlet-limit means with a plurality of beam-limit openings, and an image-forming means with a plurality of electron optics elements and movable along the primary optical axis. The electron source generates a primary-electron beam along the primary optical axis and the condenser lens focuses the primary-electron beam. A plurality of beamlets of the primary-electron beam pass through the plurality of beam-limit openings respectively, and is deflected by the plurality of electron optics elements towards the primary optical axis to form a plurality of virtual images of the electron source respectively. The plurality of beamlets is focused by the objective lens onto the surface and therefore forms a plurality of probe spots thereon respectively, and the deflection scanning unit deflects the plurality of beamlets to scan the plurality of probe spots respectively over a plurality of scanned regions within an observed area on the surface. A plurality of secondary electron beams is generated by the plurality of probe spots respectively from the plurality of scanned regions and directed into the secondary projection imaging system by the beam separator, the secondary projection imaging system focuses and keeps the plurality of secondary electron beams to be detected by the plurality of detection elements respectively, and each detection element therefore provides an image signal of one corresponding scanned region.

Deflection angles of the plurality of beamlets due to the plurality of electron optics elements are respectively set to reduce off-axis aberrations of the plurality of probe spots. Pitches of the plurality of probe spots are varied together by moving the image-forming means along the primary optical axis. The objective lens comprises a magnetic lens and an electrostatic lens. An orientation of the plurality of probe spots is selectable by varying a ratio of focusing powers of the magnetic lens and the electrostatic lens.

The deflection angles may ensure the plurality of beamlets to land on the surface perpendicularly or substantially perpendicularly. The deflection angles may ensure the plurality of beamlets to obliquely land on the surface with same or substantially same landing angles. The deflection scanning unit is above a front focal plane of the objective lens. The deflection scanning unit tilts the plurality of beamlets to obliquely land on the surface with same or substantially same landing angles. The apparatus may further comprise a beamlet-tilting deflector between the source-conversion unit and a front focal plane of the objective lens. The beamlet-tilting deflector tilts the plurality of beamlets to obliquely land on the surface with same or substantially same landing angles.

The invention also provides a multi-beam apparatus for observing a surface of a sample, which comprises an electron source, a condenser lens below the electron source, a source-conversion unit below the condenser lens, an objective lens below the source-conversion unit, a deflection scanning unit below the source-conversion unit, a sample stage below the objective lens, a beam separator below the source-conversion unit, a secondary projection imaging system, and an electron detection device with a plurality of detection elements. The electron source, the condenser lens and the objective lens are aligned with a primary optical axis of the apparatus, and the sample stage sustains the sample so that the surface faces to the objective lens. The source-conversion unit comprises a beamlet-limit means with a plurality of beam-limit openings, a first image-forming means with a plurality of first electron optics elements and a second image-forming means with a plurality of second electron optics elements, the second image-forming means is below the first image-forming means and movable in a radial direction, and one of the first image-forming means and the second image-forming means is used as an active image-forming means. The electron source generates a primary-electron beam along the primary optical axis and the condenser lens focuses the primary-electron beam. A plurality of beamlets of the primary-electron beam pass through the plurality of beam-limit openings respectively, and is deflected by the active image-forming means towards the primary optical axis to form a plurality of virtual images of the electron source respectively. The plurality of beamlets is focused by the objective lens onto the surface and therefore forms a plurality of probe spots thereon respectively, and the deflection scanning unit deflects the plurality of beamlets to scan the plurality of probe spots respectively over a plurality of scanned regions within an observed area on the surface. A plurality of secondary electron beams is generated by the plurality of probe spots respectively from the plurality of scanned regions and directed into the secondary projection imaging system by the beam separator, the secondary projection imaging system focuses and keeps the plurality of secondary electron beams to be detected by the plurality of detection elements respectively, and each detection element therefore provides an image signal of one corresponding scanned region.

Deflection angles of the plurality of beamlets due to the active image-forming means are respectively set to reduce off-axis aberrations of the plurality of probe spots. Pitches of the plurality of probe spots are varied together by changing the active image-forming means between the first image-forming means and the second image-forming means, and when the first image-forming means is selected, the second image-forming means is moved outside so as not to block the plurality of beamlets. The objective lens comprises a magnetic lens and an electrostatic lens. An orientation of the plurality of probe spots is selectable by varying a ratio of focusing powers of the magnetic lens and the electrostatic lens.

The deflection angles may ensure the plurality of beamlets to land on the surface perpendicularly or substantially perpendicularly. The deflection angles may ensure the plurality

of beamlets to obliquely land on the surface with same or substantially same landing angles. The deflection scanning unit is above a front focal plane of the objective lens. The deflection scanning unit tilts the plurality of beamlets to obliquely land on the surface with same or substantially same landing angles. The apparatus may further comprise a beamlet-tilting deflector between the source-conversion unit and a front focal plane of the objective lens. The beamlet-tilting deflector tilts the plurality of beamlets to obliquely land on the surface with same or substantially same landing angles.

The invention also provides a multi-beam apparatus for observing a surface of a sample, which comprises an electron source, a condenser lens below the electron source, a source-conversion unit below the condenser lens, an objective lens below the source-conversion unit, a deflection scanning unit below the source-conversion unit, a sample stage below the objective lens, a beam separator below the source-conversion unit, a secondary projection imaging system, and an electron detection device with a plurality of detection elements. The electron source, the condenser lens and the objective lens are aligned with a primary optical axis of the apparatus, a first principal plane of the objective lens is movable along the primary optical axis, and the sample stage sustains the sample so that the surface faces to the objective lens. The source-conversion unit comprises a beamlet-limit means with a plurality of beam-limit openings, and an image-forming means with a plurality of electron optics elements. The electron source generates a primary-electron beam along the primary optical axis and the condenser lens focuses the primary-electron beam. A plurality of beamlets of the primary-electron beam pass through the plurality of beam-limit openings respectively, and is deflected by the plurality of electron optics elements towards the primary optical axis to form a plurality of virtual images of the electron source respectively. The plurality of beamlets is focused by the objective lens onto the surface and therefore forms a plurality of probe spots thereon respectively, and the deflection scanning unit deflects the plurality of beamlets to scan the plurality of probe spots respectively over a plurality of scanned regions within an observed area on the surface. A plurality of secondary electron beams is generated by the plurality of probe spots respectively from the plurality of scanned regions and directed into the secondary projection imaging system by the beam separator, the secondary projection imaging system focuses and keeps the plurality of secondary electron beams to be detected by the plurality of detection elements respectively, and each detection element therefore provides an image signal of one corresponding scanned region.

Deflection angles of the plurality of beamlets due to the plurality of electron optics elements are respectively set to reduce off-axis aberrations of the plurality of probe spots. Pitches of the plurality of probe spots are varied together by moving the first principal plane along the primary optical axis.

The deflection angles may ensure the plurality of beamlets to land on the surface perpendicularly or substantially perpendicularly. The deflection angles may ensure the plurality of beamlets to obliquely land on the surface with same or substantially same landing angles. The deflection scanning unit is above a front focal plane of the objective lens. The deflection scanning unit tilts the plurality of beamlets to obliquely land on the surface with same or substantially same landing angles. The apparatus may further comprise a beamlet-tilting deflector between the source-conversion unit and a front focal plane of the objective lens. The beamlet-tilting deflector tilts the plurality of beamlets to obliquely land on the surface with same or substantially same landing angles. The objective lens comprises a lower magnetic lens and an electrostatic lens. The electrostatic lens comprises a field-control electrode and a field-moving electrode, and generates an electrostatic field. A potential of the field-control electrode is set to control the electrostatic field on the surface for the sample free of electrical breakdown. A potential of the field-moving electrode is set to move the electrostatic field for moving the first principal plane. An orientation of the plurality of probe spots is selectable by varying either or both of potentials of the field-control electrode and the field-moving electrode. The apparatus may further comprise an upper magnetic lens above the lower magnetic lens. The first principal plane is moved by varying a ratio of focusing powers of the lower magnetic lens and the upper magnetic lens. An orientation of the plurality of probe spots is selectable by setting polarities of magnetic fields of the upper and lower magnetic lenses same or opposite.

The invention also provides a multi-beam apparatus for observing a surface of a sample, which comprises an electron source, a condenser lens below the electron source, a source-conversion unit below the condenser lens, a transfer lens below the source-conversion unit, a field lens below the transfer lens, an objective lens below the field lens, a deflection scanning unit below the source-conversion unit, a sample stage below the objective lens, a beam separator below the source-conversion unit, a secondary projection imaging system, and an electron detection device with a plurality of detection elements. The electron source, the condenser lens, the transfer lens, the field lens and the objective lens are aligned with a primary optical axis of the apparatus, and the sample stage sustains the sample so that the surface faces to the objective lens. The source-conversion unit comprises a beamlet-limit means with a plurality of beam-limit openings, and an image-forming means with a plurality of electron optics elements. The electron source generates a primary-electron beam along the primary optical axis and the condenser lens focuses the primary-electron beam. A plurality of beamlets of the primary-electron beam pass through the plurality of beam-limit openings respectively, and is deflected by the plurality of electron optics elements towards the primary optical axis to form a plurality of first virtual images of the electron source respectively. The transfer lens images the plurality of first virtual images onto an intermediate image plane and therefore forms a plurality of second real images respectively thereon, the field lens is placed on the intermediate image plane and bends the plurality of beamlets, the objective lens images the plurality of second real images onto the surface and therefore forms a plurality of probe spots thereon respectively, and the deflection scanning unit deflects the plurality of beamlets to scan the plurality of probe spots respectively over a plurality of scanned regions within an observed area on the surface. A plurality of secondary electron beams is generated by the plurality of probe spots respectively from the plurality of scanned regions and directed into the secondary projection imaging system by the beam separator, the secondary projection imaging system focuses and keeps the plurality of secondary electron beams to be detected by the plurality of detection elements respectively, and each detection element therefore provides an image signal of one corresponding scanned region.

Bending angles of the plurality of beamlets due to the field lens are set to reduce off-axis aberrations of the plurality of probe spots. Deflection angles of the plurality of beamlets due to the plurality of electron optics elements are adjusted

to change pitches of the plurality of probe spots respectively. The objective lens comprises a first magnetic lens and a first electrostatic lens. An orientation of the plurality of probe spots is selectable by varying a ratio of focusing powers of the first magnetic lens and the first electrostatic lens. The transfer lens comprises a second magnetic lens and a second electrostatic lens. An orientation of the plurality of probe spots is selectable by varying a ratio of focusing powers of the second magnetic lens and the second electrostatic lens. The field lens comprises a third magnetic lens and a third electrostatic lens. An orientation of the plurality of probe spots is selectable by varying a ratio of focusing powers of the third magnetic lens and the third electrostatic lens. The bending angles and deflection angles of the plurality of beamlets due to the plurality of electron optics elements may ensure the plurality of beamlets to land on the surface perpendicularly or substantially perpendicularly. The bending angles and deflection angles of the plurality of beamlets due to the plurality of electron optics elements may ensure the plurality of beamlets to obliquely land on the surface with same or substantially same landing angles. The deflection scanning unit is above a front focal plane of the objective lens. The deflection scanning unit tilts the plurality of beamlets to obliquely land on the surface with same or substantially same landing angles. The apparatus may further comprise a beamlet-tilting deflector between the source-conversion unit and a front focal plane of the objective lens. The beamlet-tilting deflector tilts the plurality of beamlets to obliquely land on the surface with same or substantially same landing angles.

The invention also provides a method to configure a multi-beam apparatus for observing a surface of a sample, which comprises steps of configuring an image-forming means of a source-conversion unit movable along a primary optical axis thereof; using the image-forming means to form a plurality of virtual images of an electron source respectively; using an objective lens to image the plurality of virtual images onto the surface and form a plurality of probe spots thereon; and moving the image-forming means to vary pitches of the plurality of probe spots.

The invention also provides a method to configure a multi-beam apparatus for observing a surface of a sample, which comprises steps of configuring a source-conversion unit with a first image-forming means and a second image-forming means, wherein the second image-forming means is farther away from an electron source than the first image-forming means and movable in a radial direction of the apparatus; using one of the first image-forming means and the second image-forming means as an active image-forming means, wherein when the first image-forming means is used, the second image-forming means is moved away; using the active image-forming means to form a plurality of virtual images of the electron source respectively; using an objective lens to image the plurality of virtual images onto the surface and form a plurality of probe spots thereon; and changing the active image-forming means between the first image-forming means and the second image-forming means to vary pitches of the plurality of probe spots.

The invention also provides a method to configure a multi-beam apparatus for observing a surface of a sample, which comprises steps of configuring an objective lens with a first principal plane movable along a primary optical axis of the apparatus; using an image-forming means of a source-conversion unit to form a plurality of virtual images of an electron source respectively; using the objective lens to image the plurality of virtual images onto the surface and form a plurality of probe spots thereon; and moving the first principal plane to vary pitches of the plurality of probe spots.

The invention also provides a method to configure a multi-beam apparatus for observing a surface of a sample, which comprises steps of configuring an objective lens with a lower magnetic lens and an electrostatic lens in the apparatus; using an image-forming means of a source-conversion unit to form a plurality of virtual images of an electron source respectively; using the objective lens to image the plurality of virtual images onto the surface and form a plurality of probe spots thereon; and changing a ratio of focusing powers of the magnetic lens and the electrostatic lens to select an orientation of the plurality of probe spots.

The method may further comprise a step of configuring the objective lens with an upper magnetic lens farther away from the surface than the lower magnetic lens. The method may further comprise a step of changing polarities of magnetic fields of the upper and lower magnetic lenses to select the orientation.

The invention also provides a method to configure a multi-beam apparatus for observing a surface of a sample, which comprises steps of using an image-forming means of a source-conversion unit to deflect a plurality of beamlets from an electron source to form a plurality of first virtual images thereof respectively; using an objective lens to image the plurality of virtual images onto the surface and form a plurality of probe spots thereon; and setting deflection angles of the plurality of beamlets due to the image-forming means so that the plurality of beamlets lands on the surface with same or substantially same landing angles.

The method may further comprise a step of changing the deflection angles to equally vary the landing angles. The method may further comprise a step of using a deflection scanning unit to tilt the plurality of beamlets so as to equally vary the landing angles. The method may further comprise a step of using a beamlet-tilting deflector to tilt the plurality of beamlets so as to equally vary the landing angles.

The invention also provides a method to configure a multi-beam apparatus for observing a surface of a sample, which comprises steps of using an image-forming means of a source-conversion unit to deflect a plurality of beamlets from an electron source to form a plurality of first virtual images thereof respectively; using a transfer lens to image the plurality of first virtual images onto an intermediate image plane and forms a plurality of second real images respectively; placing a field lens on the intermediate image plane to bend the plurality of beamlets; and using an objective lens to image the plurality of second real images onto the surface and form a plurality of probe spots thereon.

The method may further comprise a step of changing deflection angles of the plurality of beamlets due to the image-forming means to vary pitches of the plurality of probe spots. The method may further comprise a step of setting deflection angles of the plurality of beamlets due to the image-forming means and bending angles of the plurality of beamlets due to the field lens so that the plurality of beamlets lands on the surface with same or substantially same landing angles. The method may further comprise a step of varying the deflection angles to equally change the landing angles. The method may further comprise a step of using a deflection scanning unit to tilt the plurality of beamlets to equally change the landing angles. The method may further comprise a step of using a beamlet-tilting deflector to tilt the plurality of beamlets to equally change the landing angles. The method may further comprise a step of configuring the objective lens with a first magnetic lens and a first electrostatic lens. The method may further com-

prise a step of changing a ratio of focusing powers of the first magnetic lens and the first electrostatic lens to select an orientation of the plurality of probe spots. The method may further comprise a step of configuring the transfer lens with a second magnetic lens and a second electrostatic lens. The method may further comprise a step of changing a ratio of focusing powers of the second magnetic lens and the second electrostatic lens to select an orientation of the plurality of probe spots. The method may further comprise a step of configuring the field lens with a third magnetic lens and a third electrostatic lens. The method may further comprise a step of changing a ratio of focusing powers of the third magnetic lens and the third electrostatic lens to select an orientation of the plurality of probe spots.

The invention also provides an apparatus, which comprises a source for providing a primary charged particle beam, a source-conversion unit for dividing the primary charged particle beam into a plurality of charged particle beamlets and using which to form a plurality of images of the source respectively, and an objective lens below the source-conversion unit for projecting the plurality of images onto a sample surface. Pitches of the plurality of charged particle beamlets on the sample surface are adjustable by changing deflection angles of the plurality of charged particle beamlets prior entering the objective lens.

The invention also provides an apparatus, which comprises a source for providing a primary charged particle beam, means for using a plurality of beamlets of the primary charged particle beam to form a plurality of images of the source, an objective lens for projecting the plurality of images onto a sample surface to form a plurality of probe spots, and means for adjusting pitches of the plurality of probe spots on the sample surface.

The invention also provides a method for observing a sample surface, which comprises steps of providing a plurality of charged particle beams with a plurality of crossovers respectively, projecting the plurality of crossovers onto the sample surface to form a plurality of probe spots thereon, scanning the plurality of probe spots on the sample surface, and changing deflection angles of the plurality of charged particle beams such that pitches of the plurality of spots can be adjusted.

Other advantages of the present invention will become apparent from the following description taken in conjunction with the accompanying drawings wherein are set forth, by way of illustration and example, certain embodiments of the present invention.

BRIEF DESCRIPTION OF THE DRAWINGS

The present invention will be readily understood by the following detailed description in conjunction with the accompanying drawings, wherein like reference numerals designate like structural elements, and in which:

FIGS. **1**A and **1**B are schematic illustrations of two configurations of the conventional multi-beam apparatus disclosed in the fifth application of the CROSS REFERENCE.

FIG. **1**C is a schematic illustration of one configuration of a conventional electromagnetic compound objective lens.

FIGS. **2**A and **2**B are schematic illustrations of the total FOV varying in size and orientation.

FIG. **3**A is a schematic illustration of one configuration of the new multi-beam apparatus in accordance with one embodiment of the present invention.

FIGS. **3**B and **3**C are schematic illustrations of varying the size of the total FOV in accordance with the embodiment in FIG. **3**A.

FIG. **4**A is a schematic illustration of another configuration of the new multi-beam apparatus in accordance with another embodiment of the present invention.

FIGS. **4**B and **4**C are schematic illustrations of varying the size of the total FOV in accordance with the embodiment in FIG. **4**A.

FIG. **5**A is a schematic illustration of another configuration of the new multi-beam apparatus in accordance with another embodiment of the present invention.

FIGS. **5**B and **5**C are schematic illustrations of varying the size of the total FOV in accordance with the embodiment in FIG. **5**A.

FIG. **6**A is a schematic illustration of another configuration of the new multi-beam apparatus in accordance with another embodiment of the present invention.

FIGS. **6**B and **6**C are schematic illustrations of varying the size of the total FOV in accordance with the embodiment in FIG. **6**A.

FIGS. **7**A-**7**C are illustrations of three configurations of the movable objective lens in FIG. **6**A in accordance with another three embodiments of the present invention.

FIGS. **8**A and **8**B are schematic illustrations of another two configurations of the new multi-beam apparatus in accordance with another two embodiments of the present invention.

FIG. **9**A is a schematic illustration of tilting the plural beamlets in the conventional multi-beam apparatus in FIG. **1**B in accordance with another embodiment of the present invention.

FIG. **9**B is a schematic illustration of tilting the plural beamlets in the new multi-beam apparatus in FIG. **5**A in accordance with another embodiment of the present invention.

FIG. **10** is a schematic illustration of another configuration of the new multi-beam apparatus in accordance with another embodiment of the present invention.

DETAILED DESCRIPTION OF EXAMPLE EMBODIMENTS

Various example embodiments of the present invention will now be described more fully with reference to the accompanying drawings in which some example embodiments of the invention are shown. Without limiting the scope of the protection of the present invention, all the description and drawings of the embodiments will exemplarily be referred to an electron beam. However, the embodiments are not used to limit the present invention to specific charged particles.

In the drawings, relative dimensions of each component and among every component may be exaggerated for clarity. Within the following description of the drawings, the same or like reference numbers refer to the same or like components or entities, and only the differences with respect to the individual embodiments are described.

Accordingly, while example embodiments of the invention are capable of various modifications and alternative forms, embodiments thereof are shown by way of example in the drawings and will herein be described in detail. It should be understood, however, that there is no intent to limit example embodiments of the invention to the particular forms disclosed, but on the contrary, example embodiments of the invention are to cover all modifications, equivalents, and alternatives falling within the scope of the invention.

In this invention, "axial" means "in the optical axis direction of an electron optics element (such as a round lens or a multipole lens), or an imaging system or an apparatus", "radial" means "in a direction perpendicular to the optical axis", "on-axial" means "on or aligned with the optical axis, and "off-axis" means "not on or aligned with the optical axis".

In this invention, "an imaging system is aligned with an optical axis" means "all the electron optics elements (such round lens and multipole lens) are aligned with the optical axis".

In this invention, X, Y and Z axe form Cartesian coordinate. The optical axis of the primary projection imaging system is on the Z-axis, and the primary electron beam travels along the Z-axis.

In this invention, "primary electrons" means "electrons emitted from an electron source and incident onto a being-observed or inspected surface of a sample, and "secondary electrons" means "electrons generated from the surface by the "primary electrons".

In this invention, "pitch" means an interval between two adjacent beamlets or beams on a plane.

In this invention, "effective deflection plane of a deflector" means "the plane where the total deflection function of the deflector can be equivalent to happen".

Based on some conventional multi-beam apparatuses proposed in the CROSS REFERENCE, this invention proposes several methods to configure a new multi-beam apparatus with a variable total FOV. In the new apparatus, the total FOV can be variable in size, orientation and illumination angle. To clearly express the methods, the multi-beam apparatus in FIG. **1**B is taken as an example. For sake of simplification in explanation, in the new apparatus, only three beamlets are shown but the number of beamlets can be anyone. In addition, one of the three beamlets is on-axis, but they can all be off-axis. In addition, the elements not related to the methods, such as the deflection scanning unit and the beam separator, are not shown or even not mentioned in the illustrations and the description of the embodiments.

In each of those conventional multi-beam apparatuses, the plural beamlets are deflected towards the optical axis by the image-forming means. The deflection angles of the plural beamlets are set to minimize the off-axis aberrations of the plural probe spots due to the objective lens. Accordingly the plural deflected beamlets typically pass through or approach the front focal point of the objective lens, i.e. forming an on-axis crossover on or close to the front focal plane of the objective lens. The pitches of the plural probe spots therefore depend on the deflection angles of the plural beamlets and the first (or object) focal length of the objective lens. Hence the pitches can be varied by changing the deflection angles and/or the first focal length of the objective lens. For example, in FIG. **1**A or FIG. **1**B, the deflection angles α_2 and α_3 of the two off-axis beamlets **102_2** and **102_3** are set to minimize the off-axis aberrations of the probe spots **102_2**s and **102_3**s due to the objective lens **131**. Accordingly the beamlets **102_2** and **102_3** typically pass through or approach the front focal point of the objective lens **131**, i.e. forming the crossover CV on the optical axis and on or close to the front focal plane of the objective lens **131**. The pitch Ps between the probe spots **102_1**s and **102_2**s is determined by the deflection angle $\alpha 2$ and the first focal length f of the objective lens **131**, and can be simply expressed as $Ps \approx \alpha_2 \cdot f$. Similarly, the pitch Ps between the probe spots **102_1**s and **102_3**s can be simply expressed as $Ps \approx \alpha_3 \cdot f$.

FIG. **3**A, FIG. **4**A and FIG. **5**A show three embodiments **300**A, **400**A and **500**A of the new apparatus changing the pitches by varying the deflection angles, and FIG. **6**A shows one embodiment **600**A changing the pitches by varying the first focal length. In the embodiment **300**A, the source-conversion unit **320** comprises one beamlet-limit means **121** with three beam-limit opening **121_1**, **121_2** and **121_3**, and one movable image-forming means **322** with three electron optics elements **322_1**, **322_2** and **322_3**. The effective deflection plane **322_0** of the movable image-forming means **322** can be moved along the optical axis **300_1** within the variation range **322_0**r. The pitches of the plural probe spots will become large as the effective deflection plane **322_0** is moved close to the objective **131** and vice versa.

FIG. **3**B shows the paths of three beamlets **102_1**, **102_2** and **102_3** when the effective deflection plane **322_0** is on the position D**1**. The movable condenser lens **210** collimates the primary electron beam **102** to be normally incident onto the source-conversion unit **320**. The beam-limit openings **121_1**~**121_3** divide the primary electron beam **102** into one on-axis beamlet **102_1**, and two off-axis beamlets **102_2** and **102_3**. The two off-axis electron optics elements **322_2** and **322_3** deflect the beamlets **102_2** and **102_3** respectively towards the optical axis **300_1**. The three beamlets **102_1**~**102_3** are focused onto the sample surface **7** by the objective lens **131** and therefore form three probe spots **102_1**s, **102_2**s and **102_3**s respectively. The deflection angles α_2 and α_3 of the beamlets **102_2** and **102_3** are set to minimize the off-axis aberrations of the probe spots **102_2**s and **102_3**s. Accordingly the beamlets **102_2** and **102_3** pass through or approach the front focal point of the objective lens **131**, i.e. forming a crossover on the optical axis **300_1** and on or close to the front focal plane thereof. The two pitches formed by the probe spots **102_1**s~**102_3**s are approximately equal to $\alpha_2 \cdot f$ and $\alpha_3 \cdot f$ respectively. The f is the first focal length of the objective lens **131**. The effective deflection plane **322_0** in FIG. **3**C is on the position D**2** closer to the objective **131** than the position D**1**. Accordingly, the deflection angles α_2 and α_3 are increased and the two pitches become larger. The probe spots **102_2**s and **102_3**s move outside from the previous positions (dash line) in FIG. **3**B.

In the embodiment **400**A in FIG. **4**A, the source-conversion unit **420** comprises one more image-forming means **124** in comparison with FIG. **1**B. The image-forming means **124** with three electron optics elements **124_1**, **124_2** and **124_3** is below the imaging-forming means **122**, and can be moved in a radial direction. Accordingly the source-conversion unit **420** works in two modes. In the first mode as shown in FIG. **4**B, the image-forming means **122** is used to form three first virtual images of the single electron source **101**, and the image-forming means **124** is moved outside the path of the beamlets **102_1**~**102_3**. In the second mode as shown in FIG. **4**C, the image-forming means **122** is switched off, and the image-forming means **124** is moved back to form three first virtual images of the single electron source **101**. The deflection angles α_2 and α_3 of the beamlets **102_2** and **102_3** are smaller in the first mode than in the second mode, and accordingly the two pitches are larger in the second mode. In FIG. **4**C, the probe spots **102_2**s and **102_3**s move outside from the previous positions (dash line) in FIG. **4**B.

The embodiment **500**A in FIG. **5**A employs one transfer lens **533** and one field lens **534** between the source-conversion unit **220** and the objective lens **131** in comparison with FIG. **1**B. Accordingly the transfer lens **533**, the field lens **534** and the objective lens **131** constitute the primary projection imaging system. FIG. **5**B shows the paths of the three beamlets **102_1**~**102_3**. The movable condenser lens **210** collimates the primary electron beam **102** to be normally

incident onto the source-conversion unit **220**. The beam-limit openings **121_1~121_3** divide the primary electron beam **102** into one on-axis beamlet **102_1**, and two off-axis beamlets **102_2** and **102_3**. The two off-axis electron optics elements **122_2** and **122_3** deflect the beamlets **102_2** and **102_3** respectively towards the optical axis **500_1**. Consequently three first virtual images of the single electron source **101** are formed. Then the transfer lens **533** focuses the three beamlets **102_1~102_3** onto the intermediate image plane PP**1**, i.e. projecting the three first virtual images thereon. Accordingly three second real images **102_1**m, **102_2**m and **102_3**m of the single electron source **101** are formed. The field lens **534** is located at the intermediate image plane PP**1**, and bends the off-axis beamlets **102_2** and **102_3** toward the optical axis **500_1** without influencing the focus situations thereof. After that, the objective lens **131** focuses the three beamlets **102_1~102_3** onto the sample surface **7**, i.e. projecting the three second real images **102_1**m~**102_3**m thereon. Consequently, on the sample surface **7**, the three beamlets **102_1~102_3** form three probe spots **102_1**s, **102_2**s and **102_3**s respectively.

In FIG. **5**B, the bending angles γ_2 and γ_3 of the beamlets **102_2** and **102_3** due to the field lens **534** are set to minimize the off-axis aberrations of the probe spots **102_2**s and **102_3**s, and the beamlets **102_2** and **102_3** accordingly pass through or approach the front focal point of the objective lens **131**, i.e. forming a crossover CV on the optical axis **500_1** and on or close to the front focal plane thereof. The pitch Ps between the probe spots **102_1**s and **102_2**s is determined by the bending angle γ_2 and the first focal length f of the objective lens **131**, and can be simply expressed as $Ps \approx \gamma_2 \cdot f$. Similarly, the pitch Ps between the probe spots **102_1**s and **102_3**s can be simply expressed as $Ps \approx \gamma_3 \cdot f$. The bending angles γ_2 and γ_3 change with the radial shifts of the second real images **102_2**m and **102_3**m, and the radial shifts change with the deflection angles α_2 and α_3 of beamlets **102_2** and **102_3** due to the electron optics elements **122_2** and **122_3**. Therefore the two pitches can be varied by adjusting the deflection angles α_2 and α_3. In FIG. **5**C, the deflection angles α_2 and α_3 are larger than in FIG. **5**B. Consequently the two off-axis probe spots **102_2**S and **102_3**S are moved away from the previous positions (shown in dash line) in FIG. **5**B to the current positions, and the pitches become larger.

In the embodiment **600**A in FIG. **6**A, the first principal plane **631_2** of the objective lens **631** can be shifted along the optical axis **600_1** within the variation range **631_2**r. The axial shift can be done by mechanically moving the position of the objective lens **631** or electrically changing the shape and/or position of the objective lens field. As the first principal plane is closer to the sample surface **7**, the first focal length f will become small and the first focal plane will move toward the surface **7**. In addition, as the first focal plane moves down, the deflection angles of the plural beamlets decrease. Accordingly the pitches of the plural probe spots will decrease.

FIGS. **6**B and **6**C show the paths of the three beamlets when the first principal plane **631_2** is respectively on the position D**3** and the position D**4**. The position D**3** is closer to the sample surface **7** than the position D**4**. Accordingly, the first focal length f and the deflection angles α_2 and α_3 of the beamlets **102_2** and **102_3** in FIG. **6**B are smaller than in FIG. **6**C. In FIG. **6**C, the probe spots **102_2**s and **102_3**s move outside from the previous positions (dash line) in FIG. **6**B, and the two pitches become larger than in FIG. **6**B.

The objective lens in one conventional multi-beam apparatus is an electromagnetic compound lens, as one embodiment **131-1** shown in FIG. **1**C. The objective lens comprises one magnetic lens and one electrostatic lens, and works in a retarding mode (the landing energy of an electron is lower than the energy of the electron passing through the objective lens) due to low geometric aberrations and low radiation damage on the sample. The magnetic lens is configured by the coil **131_c1** and the yoke **131_y1** with the pole-pieces **131_mp1** and **131_mp2**, and the electrostatic lens is formed by the pole-piece **131_mp1**, the field-control electrode **131_e1** and the sample **8**. The potential of the inner pole-piece **131_mp1** is higher than the sample **8**. The potential of the field-control electrode **131_e1** is set to control the electric field on the sample surface. The electric field can ensure the sample free of electrical breakdown, reduce the geometric aberrations of the plural probe spots, control the charge-up on the sample surface **7** by reflecting back a part of secondary electrons or enhance the collection of secondary electron beams. In FIG. **1**C, the shape of the magnetic field is not variable, and the shape of the electrostatic field can only be changed within a limited range. Hence the conventional objective lens is almost not electrically (changing the potentials of the electrodes and/or the excitation current of the coil) movable.

Next three solutions for configuring the movable objective lens **631** are proposed in terms of the conventional objective lens **131-1** in FIG. **1**C, and respectively shown in FIGS. **7**A, **7**B and **7**C. In FIG. **7**A, the embodiment **631-1** comprises one more electrode **631-1_e2** between the inner pole-piece **131_mp1** and the field-control electrode **131_e1** in comparison with FIG. **1**C. Accordingly the electrostatic lens is formed by the inner pole-piece **131_mp1**, the electrode **631-1_e2**, the field-control electrode **131_e1** and the sample **8**. The electrostatic field shape of the electrostatic lens can be varied by adjusting the potential of the electrode **131_e1** and the potential of the electrode **631-1_e2** as well. As the potential of the electrode **631-1_e2** is adjusted to approach the potential of the inner pole-piece **131_mp1**, the electrostatic field is squeezed towards the sample, which is equal to moving the objective lens **631-1** towards the sample **8**. Accordingly the electrode **631-1_e2** can be called as a field-moving electrode.

In FIG. **7**B, the embodiment **631-2** comprises two more electrodes **631-2_e2** and **631-2_e3** inside the bore of the yoke **131_y1** and above the field-control electrode **131_e1** in comparison with FIG. **1**C. Accordingly the electrostatic lens is formed by the electrodes **631-2_e3** and **631-2_e2**, the field-control electrode **131_e1** and the sample **8**. The potential of the electrodes **631-2_e3** is higher than the sample and can be equal to the inner pole-piece **131_mp1**. The electrostatic field shape of the electrostatic lens can be varied by adjusting the potential of the electrode **131_e1** and the potential of the electrode **631-2_e2** as well. Similar to FIG. **7**A, as the potential of the electrode **631-2_e2** is adjusted to approach the potential of the electrodes **631-1_e3**, the electrostatic field is squeezed towards the sample **8**, which is equal to moving the objective lens **631-2** towards the sample **8**. Accordingly the electrode **631-2_e2** can be called as a field-moving electrode. In comparison the embodiment **631-1** with FIG. **7**A, the magnetic lens can be placed closer to the sample **8**, and thereby providing a deeper magnetic immersion to the sample so as to generate lower aberrations.

In FIG. **7**C, the embodiment **631-3** comprises one more coil **631-3_c2** and one more yoke **631-3y2** inside the bore of the yoke **131_y1** and above the inner pole-piece **131_mp1** in comparison with FIG. **1**C. Accordingly one lower magnetic lens, one upper magnetic lens and one electrostatic lens are formed. The lower magnetic lens generates one lower mag-

netic field by the coil **131_c1** through the lower magnetic-circuit gap G**1** between the inner and outer pole-pieces **131_mp1** and **131_mp2** of the yoke **131_y1**, while the upper magnetic lens forms one upper magnetic field by the coil **631-3_c2** through the magnetic-circuit gap G**2** between the inner pole-piece **131_mp1** and the upper pole-piece **631-3_mp3** of the yoke **631-3_y2**. The electrostatic lens is formed by the inner pole-piece **131_mp1**, the field-control electrode **131_e1** and the sample **8**. The distribution shape of the total magnetic field of the objective lens **631-3** changes with the combination of the upper and lower magnetic fields, therefore can be varied by adjusting the excitation ratio of the upper and lower magnetic lenses or the current ratio of the coils **131_c1** and **631-3_c2**. As the current ratio is adjusted higher, the total magnetic field of the objective lens **631-3** is squeezed towards the sample, which is equal to moving the objective lens **631-3** towards the sample **8**. Two extreme examples are the total magnetic field of the objective lens **631-3** locates the superior top when the coil **131_c1** turns off and the coil **631-3-c2** turn on, and the lowest when the coil **131_c1** turns on and the coil **631-3_c2** turns off. Each of the solutions in FIGS. **7**A and **7**B can be combined with the solution in FIG. **7**C to configure more embodiments of the movable objective lens **631**.

Next some methods of intentionally rotating the probe spot array will be proposed, which can be used to eliminate the orientation variation of the total FOV with respect to changes in the observing conditions and/or accurately match the orientations of sample patterns and the probe spot array. As mentioned above, the objective lens in one conventional multi-beam apparatus is typically an electromagnetic compound lens, such as the embodiment **131-1** shown in FIG. **1**C. Therefore appropriately combining the focusing powers of the magnetic lens and the electrostatic lens can rotate the probe spot array around the optical axis to a certain degree. For example, if the objective lens **131** in FIG. **1**A is similar to the embodiment **131-1** in FIG. **1**C, the field-control electrode **131_e1** can be used to control the rotation of the probe spots **102_2** and **102_3**s to a certain degree as well as controlling the electrical field on the surface **7**. To keep the electrical field on the surface **7** weaker than a permissible value for the specimen safety, the potential of the field-control electrode **131_e1** can be varied within one specific range, such as −3 kV~5 kV with respect to the sample **8**. The focusing power of the electrostatic lens changes with the potential of the field-control electrode **131_e1**, and accordingly the focusing power of the magnetic lens needs being changed to keep the plural beamlets focused on the sample surface **7**. The focusing power variation of the magnetic lens changes the rotation angles of the probe spots **102_2**s and **102_3**s. Hence, the rotation angles of the probe spots **102_2**s and **102_3**s can be adjusted by varying the potential of the field-control electrode **131_e1** within the specific range.

For each of the foregoing embodiments **300**A, **400**A and **500**A of the new apparatus in FIGS. **3**A, **4**A and **5**A, if the objective lens **131** has a configuration similar to the embodiment **131-1**, the orientation of the probe spot array can be adjusted by this method. For the embodiment **600**A of the new apparatus in FIG. **6**A, if the movable objective lens **631** has a configuration similar to one of the embodiments **631-1**, **631-2** and **631-3** in FIGS. **7**A-**7**C, the field-control electrode **131_e1** and/or the corresponding field-moving electrode can be used to control the rotation of the probe spot array. For the embodiment **631-3**, the orientation can also be changed by varying the polarities of the magnetic fields of the upper magnetic lens and the lower magnetic lens. As well known, for a magnetic lens, the rotation angle is related to the polarity of the magnetic field but the focusing power is not. When the polarities of the magnetic fields of the upper magnetic lens and the lower magnetic lens are same, the upper magnetic lens and the lower magnetic lens rotate the probe spot array in a same direction. When the polarities are opposite to each other, the upper magnetic lens and the lower magnetic lens rotate the probe spot array in opposite directions. Hence the embodiment **631-3** can generate two different orientations of the probe spot array with respect to a required focusing power and the corresponding position of the first principal plane.

For the embodiment **500**A in FIG. **5**A, the transfer lens **533** and the field lens **534** provide more possibilities to control the rotation of the probe spot array. One embodiment **510**A is shown in FIG. **8**A, wherein the electromagnetic compound transfer lens **533-1** comprises one electrostatic transfer lens **533_11** and one magnetic transfer lens **533_12**. The magnetic field of the magnetic transfer lens **533_12** can be adjusted to change the rotation of the probe spot array, and the electrostatic field of the electrostatic transfer lens **533_11** can be accordingly varied to keep the three second real images **102_1**m, **102_2**m and **102_3**m on the intermediate image plane PP**1**. Another embodiment **520**A is shown in FIG. **8**B, wherein the electromagnetic compound field lens **534-1** comprises one electrostatic field lens **534_11** and one magnetic field lens **534_12**. The magnetic field of the magnetic field lens **534_12** can be adjusted to change the rotation of the probe spot array, and the electrostatic field of the electrostatic field lens **534_11** can be accordingly varied to generate the required bending angles of the plural beamlets.

In each of the foregoing embodiments, the plural beamlets are normal or substantially normal incident onto the sample surface, i.e. the incident angles or landing angles (angles formed with the normal of the sample surface) of the plural beamlets are approximately equal to zero. To effectively observe some patterns of a sample, the incident angles are better a little larger than zero. In this case, to ensure plural beamlets perform alike, the plural beamlets are required to have same incident angles. To do so, the crossover CV of the plural beamles needs to be shifted away from the optical axis. The shift of the crossover CV can be done by the image-forming means or one additional beamlet-tilting deflector.

FIG. **9**A shows how to tilt the plural beamlets **102_1**~**102_3** by the image-forming means **122** in the conventional multi-beam apparatus **200**A. In comparison with FIG. **1**B, the deflection angles $\alpha 1$ (equal to zero in FIG. **1**B), $\alpha 2$ and $\alpha 3$ of the beamlets **102_1**~**102_3** respectively are added same or substantially same amounts so that the crossover CV of the beamlets **102_1**~**102_3** is shifted away from the optical axis **100_1** and on or close to the first focal plane of the objective lens **131**. Accordingly the beamlets **102_1**~**102_3** obliquely land on the surface **7** with same or nearly same landing angles. The plural beamlets **102_1**~**102_3** in each of the embodiments **300**A, **400**A, **500**A and **600**A can be tilted by the corresponding image-forming means in the same way. For the embodiments **300**A, **400**A and **600**A, the paths of plural beamlets **102_1**~**102_3** will be similar to those in FIG. **9**A. For the embodiment **500**A, the paths will be different, as shown in FIG. **9**B. In comparison with FIG. **5**B, the deflection angles $\alpha 1$ (equal to zero in FIG. **5**B), $\alpha 2$ and $\alpha 3$ of the beamlets **102_1**~**102_3** shift the three second real images **102_1**m, **102_2**m and **102_3**m same or substantially distances on the intermediate image plane PP**1**. Accordingly the crossover CV of the

beamlets **102_1~102_3** after bended by the field **534**, is still on or close to the first focal plane but shifted away from the optical axis **500_1**.

FIG. **10** shows how to tilt the plural beamlets **102_1~102_3** by one beamlet-tilting deflector **135** in one embodiment **700**A of the new apparatus. In comparison with FIG. **1**B, the beamlet-tilting deflector **135** deflects the beamlets **102_1~102_3** together to shift the crossover CV away from the optical axis **700_1** and on or close to the front focal plane of the objective lens **131**. Similarly, one beamlet-tilting deflector can also be added to the embodiments **300**A, **400**A, **500**A and **600**A for tilting the plural beams together. The beamlet-tilting deflector can be placed between the source-conversion unit and the front focal plane of the objective lens, and is preferred close to the source-conversion unit. In addition, if the deflection scanning unit in one of the foregoing embodiments is above the front focal plane of the objective lens, it can shift the crossover of the plural beamlets and the additional beamlet-tilting deflector therefore is not needed.

Although each of the foregoing embodiments of the new apparatus only employs one or two of the methods for varying the total FOV in size, orientation and incident angle, the methods can be combined in many ways. For example the new apparatus can use one movable image-forming means and one movable objective lens together, or use one movable objective lens, one transfer lens and one field lens together. Although the methods are shown and explained by taking the embodiment **200**A in FIG. **1**B as an example, the methods can be applied to the other embodiments (such as the embodiment **100**A in FIG. **1**A) of the conventional apparatuses to configure more embodiments of the new multi-beam apparatus.

In summary, based on the conventional multi-beam apparatuses proposed in the CROSS REFERENCE, this invention proposes several methods to configure a new multi-beam apparatus whose total FOV is variable in size, orientation and incident angle. Hence the new apparatus provides more flexibility to speed the sample observation and enable more kinds of samples observable. More specifically, the new apparatus can be used as a yield management to provide more possibilities to achieve a high throughput and detect more kinds of defects. Three methods are proposed to change the pitches of the plural beamlets on the sample surface for varying the size of the total FOV, i.e. using a movable image-forming means in the source-conversion unit, using a movable objective lens, and using a transfer lens and a field lens between the source-conversion unit and the objective lens. Three methods are employed to intentionally rotate the probe spot array for varying the orientation of the total FOV, i.e. using an electromagnetic compound objective lens and varying the electric field thereof, using one objective lens with two magnetic lenses and setting the magnetic fields thereof opposite in polarity, and using one magnetic lens in either or both of the transfer lens and the field lens. Three methods are proposed to shift the crossover of the plural beamlets away from the optical axis for equally varying the landing angles of the plural beamlets on the sample surface. The shift can be done by the image-forming means, or one additional beamlet-tilting deflector, or the deflection scanning unit.

Although the present invention has been explained in relation to its preferred embodiment, it is to be understood that other modifications and variation can be made without departing the spirit and scope of the invention as hereafter claimed.

What is claimed is:

1. A multi-beam apparatus for observing a surface of a sample, comprising:

an electron source;

a condenser lens below said electron source;

a source-conversion unit below said condenser lens;

an objective lens below said source-conversion unit;

a deflection scanning unit below said source-conversion unit;

a sample stage below said objective lens;

a beam separator below said source-conversion unit;

a secondary projection imaging system; and

an electron detection device with a plurality of detection elements,

wherein said electron source, said condenser lens and said objective lens are aligned with a primary optical axis of said apparatus, and said sample stage sustains said sample so that said surface faces to said objective lens,

wherein said source-conversion unit comprises a beamlet-limit means with a plurality of beam-limit openings, and an image-forming means with a plurality of electron optics elements and movable along said primary optical axis,

wherein said electron source generates a primary-electron beam along said primary optical axis and said condenser lens focuses said primary-electron beam,

wherein a plurality of beamlets of said primary-electron beam pass through said plurality of beam-limit openings respectively, and is deflected by said plurality of electron optics elements towards said primary optical axis to form a plurality of virtual images of said electron source respectively,

wherein said plurality of beamlets is focused by said objective lens onto said surface and therefore forms a plurality of probe spots thereon respectively, and said deflection scanning unit deflects said plurality of beamlets to scan said plurality of probe spots respectively over a plurality of scanned regions within an observed area on said surface,

wherein a plurality of secondary electron beams is generated by said plurality of probe spots respectively from said plurality of scanned regions and directed into said secondary projection imaging system by said beam separator, said secondary projection imaging system focuses and keeps said plurality of secondary electron beams to be detected by said plurality of detection elements respectively, and each detection element therefore provides an image signal of one corresponding scanned region.

2. The apparatus according to claim **1**, wherein deflection angles of said plurality of beamlets due to said plurality of electron optics elements are respectively set to reduce off-axis aberrations of said plurality of probe spots.

3. The apparatus according to claim **2**, wherein pitches of said plurality of probe spots are varied together by moving said image-forming means along said primary optical axis.

4. The apparatus according to claim **2**, wherein said objective lens comprises a magnetic lens and an electrostatic lens.

5. The apparatus according to claim **4**, wherein an orientation of said plurality of probe spots is selectable by varying a ratio of focusing powers of said magnetic lens and said electrostatic lens.

6. The apparatus according to claim 2, wherein said deflection angles ensure said plurality of beamlets to land on said surface perpendicularly or substantially perpendicularly.

7. The apparatus according to claim 2, wherein said deflection angles ensure said plurality of beamlets to obliquely land on said surface with same or substantially same landing angles.

8. The apparatus according to claim 6, wherein said deflection scanning unit is above a front focal plane of said objective lens.

9. The apparatus according to claim 8, wherein said deflection scanning unit tilts said plurality of beamlets to obliquely land on said surface with same or substantially same landing angles.

10. The apparatus according to claim 6, further comprising a beamlet-tilting deflector between said source-conversion unit and a front focal plane of said objective lens.

11. The apparatus according to claim 10, wherein said beamlet-tilting deflector tilts said plurality of beamlets to obliquely land on said surface with same or substantially same landing angles.

[12. A multi-beam apparatus for observing a surface of a sample, comprising:

an electron source;

a condenser lens below said electron source;

a source-conversion unit below said condenser lens;

an objective lens below said source-conversion unit;

a deflection scanning unit below said source-conversion unit;

a sample stage below said objective lens;

a beam separator below said source-conversion unit;

a secondary projection imaging system; and

an electron detection device with a plurality of detection elements,

wherein said electron source, said condenser lens and said objective lens are aligned with a primary optical axis of said apparatus, and said sample stage sustains said sample so that said surface faces to said objective lens,

wherein said source-conversion unit comprises a beamlet-limit means with a plurality of beam-limit openings, a first image-forming means with a plurality of first electron optics elements and a second image-forming means with a plurality of second electron optics elements, said second image-forming means is below said first image-forming means and movable in a radial direction, and one of said first image-forming means and said second image-forming means is used as an active image-forming means,

wherein said electron source generates a primary-electron beam along said primary optical axis and said condenser lens focuses said primary-electron beam,

wherein a plurality of beamlets of said primary-electron beam pass through said plurality of beam-limit openings respectively, and is deflected by said active image-forming means towards said primary optical axis to form a plurality of virtual images of said electron source respectively,

wherein said plurality of beamlets is focused by said objective lens onto said surface and therefore forms a plurality of probe spots thereon respectively, and said deflection scanning unit deflect said plurality of beamlets to scan said plurality of probe spots respectively over a plurality of scanned regions within an observed area on said surface,

wherein a plurality of secondary electron beams is generated by said plurality of probe spots respectively from said plurality of scanned regions and directed into said secondary projection imaging system by said beam separator, said secondary projection imaging system focuses and keeps said plurality of secondary electron beams to be detected by said plurality of detection elements respectively, and each detection element therefore provides an image signal of one corresponding scanned region.]

[13. The apparatus according to claim 12, wherein deflection angles of said plurality of beamlets due to said active image-forming means are respectively set to reduce off-axis aberrations of said plurality of probe spots.]

[14. The apparatus according to claim 13, wherein pitches of said plurality of probe spots are varied together by changing said active image-forming means between said first image-forming means and said second image-forming means, and when said first image-forming means is selected, said second image-forming means is moved outside so as not to block said plurality of beamlets.]

[15. The apparatus according to claim 13, wherein said objective lens comprises a magnetic lens and an electrostatic lens.]

[16. The apparatus according to claim 15, wherein an orientation of said plurality of probe spots is selectable by varying a ratio of focusing powers of said magnetic lens and said electrostatic lens.]

[17. The apparatus according to claim 13, wherein said deflection angles ensure said plurality of beamlets to land on said surface perpendicularly or substantially perpendicularly.]

[18. The apparatus according to claim 13, wherein said deflection angles ensure said plurality of beamlets to obliquely land on said surface with same or substantially same landing angles.]

[19. The apparatus according to claim 17, wherein said deflection scanning unit is above a front focal plane of said objective lens.]

[20. The apparatus according to claim 19, wherein said deflection scanning unit tilts said plurality of beamlets to obliquely land on said surface with same or substantially same landing angles.]

[21. The apparatus according to claim 17, further comprising a beamlet-tilting deflector between said source-conversion unit and a front focal plane of said objective lens.]

[22. The apparatus according to claim 21, wherein said beamlet-tilting deflector tilts said plurality of beamlets to obliquely land on said surface with same or substantially same landing angles.]

[23. An multi-beam apparatus for observing a surface of a sample, comprising:

an electron source;

a condenser lens below said electron source;

a source-conversion unit below said condenser lens;

an objective lens below said source-conversion unit;

a deflection scanning unit below said source-conversion unit;

a sample stage below said objective lens;

a beam separator below said source-conversion unit;

a secondary projection imaging system; and

an electron detection device with a plurality of detection elements,

wherein said electron source, said condenser lens and said objective lens are aligned with a primary optical axis of said apparatus, a first principal plane of said

objective lens is movable along said primary optical axis, and said sample stage sustains said sample so that said surface faces to said objective lens,

wherein said source-conversion unit comprises a beamlet-limit means with a plurality of beam-limit openings, and an image-forming means with a plurality of electron optics elements,

wherein said electron source generates a primary-electron beam along said primary optical axis and said condenser lens focuses said primary-electron beam,

wherein a plurality of beamlets of said primary-electron beam pass through said plurality of beam-limit openings respectively, and is deflected by said plurality of electron optics elements towards said primary optical axis to form a plurality of virtual images of said electron source respectively,

wherein said plurality of beamlets is focused by said objective lens onto said surface and therefore forms a plurality of probe spots thereon respectively, and said deflection scanning unit deflects said plurality of beamlets to scan said plurality of probe spots respectively over a plurality of scanned regions within an observed area on said surface,

wherein a plurality of secondary electron beams is generated by said plurality of probe spots respectively from said plurality of scanned regions and directed into said secondary projection imaging system by said beam separator, said secondary projection imaging system focuses and keeps said plurality of secondary electron beams to be detected by said plurality of detection elements respectively, and each detection element therefore provides an image signal of one corresponding scanned region.]

[**24**. The apparatus according to claim **23**, wherein deflection angles of said plurality of beamlets due to said plurality of electron optics elements are respectively set to reduce off-axis aberrations of said plurality of probe spots.]

[**25**. The apparatus according to claim **24**, wherein pitches of said plurality of probe spots are varied together by moving said first principal plane along said primary optical axis.]

[**26**. The apparatus according to claim **24**, wherein said deflection angles ensure said plurality of beamlets to land on said surface perpendicularly or substantially perpendicularly.]

[**27**. The apparatus according to claim **24**, wherein said deflection angles ensure said plurality of beamlets to obliquely land on said surface with same or substantially same landing angles.]

[**28**. The apparatus according to claim **26**, wherein said deflection scanning unit is above a front focal plane of said objective lens.]

[**29**. The apparatus according to claim **28**, wherein said deflection scanning unit tilts said plurality of beamlets to obliquely land on said surface with same or substantially same landing angles.]

[**30**. The apparatus according to claim **26**, further comprising a beamlet-tilting deflector between said source-conversion unit and a front focal plane of said objective lens.]

[**31**. The apparatus according to claim **30**, wherein said beamlet-tilting deflector tilts said plurality of beamlets to obliquely land on said surface with same or substantially same landing angles.]

[**32**. The apparatus according to claim **24**, wherein said objective lens comprises a lower magnetic lens and an electrostatic lens.]

[**33**. The apparatus according to claim **32**, wherein said electrostatic lens comprises a field-control electrode and a field-moving electrode, and generates an electrostatic field.]

[**34**. The apparatus according to claim **33**, wherein a potential of said field-control electrode is set to control said electrostatic field on said surface for said sample free of electrical breakdown.]

[**35**. The apparatus according to claim **34**, wherein a potential of said field-moving electrode is set to move said electrostatic field for moving said first principal plane.]

[**36**. The apparatus according to claim **34**, wherein an orientation of said plurality of probe spots is selectable by varying either or both of potentials of said field-control electrode and said field-moving electrode.]

[**37**. The apparatus according to claim **32**, further comprising an upper magnetic lens above said lower magnetic lens.]

[**38**. The apparatus according to claim **37**, wherein said first principal plane is moved by varying a ratio of focusing powers of said lower magnetic lens and said upper magnetic lens.]

[**39**. The apparatus according to claim **37**, wherein an orientation of said plurality of probe spots is selectable by setting polarities of magnetic fields of said upper and lower magnetic lenses same or opposite.]

[**40**. A multi-beam apparatus for observing a surface of a sample, comprising:

an electron source;

a condenser lens below said electron source;

a source-conversion unit below said condenser lens;

a transfer lens below said source-conversion unit;

a field lens below said transfer lens;

an objective lens below said field lens;

a deflection scanning unit below said source-conversion unit;

a sample stage below said objective lens;

a beam separator below said source-conversion unit;

a secondary projection imaging system; and

an electron detection device with a plurality of detection elements,

wherein said electron source, said condenser lens, said transfer lens, said field lens and said objective lens are aligned with a primary optical axis of said apparatus, and said sample stage sustains said sample so that said surface faces to said objective lens,

wherein said source-conversion unit comprises a beamlet-limit means with a plurality of beam-limit openings, and an image-forming means with a plurality of electron optics elements,

wherein said electron source generates a primary-electron beam along said primary optical axis and said condenser lens focuses said primary-electron beam,

wherein a plurality of beamlets of said primary-electron beam pass through said plurality of beam-limit openings respectively, and is deflected by said plurality of electron optics elements towards said primary optical axis to form a plurality of first virtual images of said electron source respectively,

wherein said transfer lens images said plurality of first virtual images onto an intermediate image plane and therefore forms a plurality of second real images respectively thereon, said field lens is placed on said intermediate image plane and bends said plurality of beamlets, said objective lens images said plurality of second real images onto said surface and therefore forms a plurality of probe spots thereon respectively,

and said deflection scanning unit deflects said plurality of beamlets to scan said plurality of probe spots respectively over a plurality of scanned regions within an observed area on said surface,

wherein a plurality of secondary electron beams is generated by said plurality of probe spots respectively from said plurality of scanned regions and directed into said secondary projection imaging system by said beam separator, said secondary projection imaging system focuses and keeps said plurality of secondary electron beams to be detected by said plurality of detection elements respectively, and each detection element therefore provides an image signal of one corresponding scanned region.]

[**41**. The apparatus according to claim **40**, wherein bending angles of said plurality of beamlets due to said field lens are set to reduce off-axis aberrations of said plurality of probe spots.]

[**42**. The apparatus according to claim **41**, wherein deflection angles of said plurality of beamlets due to said plurality of electron optics elements are adjusted to change pitches of said plurality of probe spots respectively.]

[**43**. The apparatus according to claim **41**, wherein said objective lens comprises a first magnetic lens and a first electrostatic lens.]

[**44**. The apparatus according to claim **43**, wherein an orientation of said plurality of probe spots is selectable by varying a ratio of focusing powers of said first magnetic lens and said first electrostatic lens.]

[**45**. The apparatus according to claim **41**, wherein said transfer lens comprises a second magnetic lens and a second electrostatic lens.]

[**46**. The apparatus according to claim **45**, wherein an orientation of said plurality of probe spots is selectable by varying a ratio of focusing powers of said second magnetic lens and said second electrostatic lens.]

[**47**. The apparatus according to claim **41**, wherein said field lens comprises a third magnetic lens and a third electrostatic lens.]

[**48**. The apparatus according to claim **47**, wherein an orientation of said plurality of probe spots is selectable by varying a ratio of focusing powers of said third magnetic lens and said third electrostatic lens.]

[**49**. The apparatus according to claim **41**, wherein said bending angles and deflection angles of said plurality of beamlets due to said plurality of electron optics elements ensure said plurality of beamlets to land on said surface perpendicularly or substantially perpendicularly.]

[**50**. The apparatus according to claim **41**, wherein said bending angles and deflection angles of said plurality of beamlets due to said plurality of electron optics elements ensure said plurality of beamlets to obliquely land on said surface with same or substantially same landing angles.]

[**51**. The apparatus according to claim **49**, wherein said deflection scanning unit is above a front focal plane of said objective lens.]

[**52**. The apparatus according to claim **51**, wherein said deflection scanning unit tilts said plurality of beamlets to obliquely land on said surface with same or substantially same landing angles.]

[**53**. The apparatus according to claim **49**, further comprising a beamlet-tilting deflector between said source-conversion unit and a front focal plane of said objective lens.]

[**54**. The apparatus according to claim **53**, wherein said beamlet-tilting deflector tilts said plurality of beamlets to obliquely land on said surface with same or substantially same landing angles.]

55. A method to configure a multi-beam apparatus for observing a surface of a sample, comprising steps of:

configuring an image-forming means of a source-conversion unit movable along a primary optical axis thereof, *the image-forming means having a plurality of electron optics elements*;

using said image-forming means to form a plurality of virtual images of an electron source respectively;

using an objective lens to image said plurality of virtual images onto said surface and form a plurality of probe spots thereon; and

moving said image-forming means to vary pitches of said plurality of probe spots.

[**56**. A method to configure a multi-beam apparatus for observing a surface of a sample, comprising steps of:

configuring a source-conversion unit with a first image-forming means and a second image-forming means, wherein said second image-forming means is farther away from an electron source than said first image-forming means and movable in a radial direction of said apparatus;

using one of said first image-forming means and said second image-forming means as an active image-forming means, wherein when said first image-forming means is used, said second image-forming means is moved away;

using said active image-forming means to form a plurality of virtual images of said electron source respectively;

using an objective lens to image said plurality of virtual images onto said surface and form a plurality of probe spots thereon; and

changing said active image-forming means between said first image-forming means and said second image-forming means to vary pitches of said plurality of probe spots.]

[**57**. A method to configure a multi-beam apparatus for observing a surface of a sample, comprising steps of:

configuring an objective lens with a first principal plane movable along a primary optical axis of said apparatus;

using an image-forming means of a source-conversion unit to form a plurality of virtual images of an electron source respectively;

using said objective lens to image said plurality of virtual images onto said surface and form a plurality of probe spots thereon; and

moving said first principal plane to vary pitches of said plurality of probe spots.]

[**58**. A method to configure a multi-beam apparatus for observing a surface of a sample, comprising steps of:

configuring an objective lens with a lower magnetic lens and an electrostatic lens in said apparatus;

using an image-forming means of a source-conversion unit to form a plurality of virtual images of an electron source respectively;

using said objective lens to image said plurality of virtual images onto said surface and form a plurality of probe spots thereon; and

changing a ratio of focusing powers of said magnetic lens and said electrostatic lens to select an orientation of said plurality of probe spots.]

[**59**. The method according to claim **58**, further comprising a step of configuring said objective lens with an upper magnetic lens farther away from said surface than said lower magnetic lens.]

[**60**. The method according to claim **59**, further comprising a step of changing polarities of magnetic fields of said upper and lower magnetic lenses to select said orientation.]

[**61**. A method to configure a multi-beam apparatus for observing a surface of a sample, comprising steps of:

using an image-forming means of a source-conversion unit to deflect a plurality of beamlets from an electron source to form a plurality of first virtual images thereof respectively;

using an objective lens to image said plurality of virtual images onto said surface and form a plurality of probe spots thereon; and

setting deflection angles of said plurality of beamlets due to said image-forming means so that said plurality of beamlets lands on said surface with same or substantially same landing angles.]

[**62**. The method according to claim **61**, further comprising a step of changing said deflection angles to equally vary said landing angles.]

[**63**. The method according to claim **61**, further comprising a step of using a deflection scanning unit to tilt said plurality of beamlets so as to equally vary said landing angles.]

[**64**. The method according to claim **61**, further comprising a step of using a beamlet-tilting deflector to tilt said plurality of beamlets so as to equally vary said landing angles.]

[**65**. A method to configure a multi-beam apparatus for observing a surface of a sample, comprising steps of:

using an image-forming means of a source-conversion unit to deflect a plurality of beamlets from an electron source to form a plurality of first virtual images thereof respectively;

using a transfer lens to image said plurality of first virtual images onto an intermediate image plane and forms a plurality of second real images respectively;

placing a field lens on said intermediate image plane to bend said plurality of beamlets; and

using an objective lens to image said plurality of second real images onto said surface and form a plurality of probe spots thereon.]

[**66**. The method according to claim **65**, further comprising a step of changing deflection angles of said plurality of beamlets due to said image-forming means to vary pitches of said plurality of probe spots.]

[**67**. The method according to claim **65**, further comprising a step of setting deflection angles of said plurality of beamlets due to said image-forming means and bending angles of said plurality of beamlets due to said field lens so that said plurality of beamlets lands on said surface with same or substantially same landing angles.]

[**68**. The method according to claim **67**, further comprising a step of varying said deflection angles to equally change said landing angles.]

[**69**. The method according to claim **67**, further comprising a step of using a deflection scanning unit to tilt said plurality of beamlets to equally change said landing angles.]

[**70**. The method according to claim **67**, further comprising a step of using a beamlet-tilting deflector to tilt said plurality of beamlets to equally change said landing angles.]

[**71**. The method according to claim **65**, further comprising a step of configuring said objective lens with a first magnetic lens and a first electrostatic lens.]

[**72**. The method according to claim **71**, further comprising a step of changing a ratio of focusing powers of said first magnetic lens and said first electrostatic lens to select an orientation of said plurality of probe spots.]

[**73**. The method according to claim **65**, further comprising a step of configuring said transfer lens with a second magnetic lens and a second electrostatic lens.]

[**74**. The method according to claim **73**, further comprising a step of changing a ratio of focusing powers of said second magnetic lens and said second electrostatic lens to select an orientation of said plurality of probe spots.]

[**75**. The method according to claim **65**, further comprising a step of configuring said field lens with a third magnetic lens and a third electrostatic lens.]

[**76**. The method according to claim **75**, further comprising a step of changing a ratio of focusing powers of said third magnetic lens and said third electrostatic lens to select an orientation of said plurality of probe spots.]

77. An apparatus, comprising:

a source for providing a primary charged particle beam;

a source-conversion unit for dividing the primary charged particle beam into a plurality of charged particle beamlets and using which to form a plurality of images of the source respectively*, the source-conversion unit comprising a beamlet-limit means with beam-limit openings and an image-forming means with electron optics elements*;

an objective lens below said source-conversion unit for projecting the plurality of images onto a sample surface;

wherein pitches of the plurality of charged particle beamlets on the sample surface are adjustable by changing [deflection angles of the plurality of charged particle beamlets prior entering] *a distance from a deflection plane of the source-conversion unit to* the objective lens.

78. An apparatus, comprising:

a source for providing a primary charged particle beam;

a beamlet-limit means *with beam-limit openings* for [using] *allowing* a plurality of beamlets of the primary charged particle beam *to pass through, the plurality of beamlets being used* to form a plurality of images of the source;

an objective lens for projecting the plurality of images onto a sample surface to form a plurality of probe spots; and

an image-forming means *with electron optics elements* for adjusting pitches of the plurality of probe spots on the sample surface *by moving along a primary optical axis*.

79. A method for observing a sample surface, said method comprising steps of:

providing a plurality of charged particle beams with a plurality of crossovers respectively *using a source-conversion unit*;

projecting the plurality of crossovers onto the sample surface to form a plurality of probe spots thereon *using an objective lens*;

scanning the plurality of probe spots on the sample surface; and

changing *a distance from a* deflection [angles of the plurality of charged particle beams] *plane of the source-conversion unit to the objective lens* such that pitches of the plurality of *probe* spots can be adjusted.

80. A source-conversion unit comprising:

a beamlet-limit device with a plurality of beam-limit openings configured to allow a plurality of beamlets to pass through: and

an image-forming device movable along a primary optical axis and comprising a plurality of electron optics elements, wherein at least some of the plurality of electron optics are configured to deflect at least some of the plurality of beamlets towards the primary optical axis.

81. The source-conversion unit of claim 80, wherein the deflection of the at least some of the plurality of beamlets towards the primary optical axis form a plurality of virtual images of an electron source.

82. The source-conversion unit of claim 80, wherein the at least some of the plurality of electron optics elements are configured to deflect at least some of the plurality of beamlets at deflection angles to reduce off-axis aberrations of a plurality of probe spots.

83. The source-conversion unit of claim 82, wherein the plurality of probe spots have pitches that are varied together by moving the image-forming device along the primary optical axis.

84. The source-conversion unit of claim 82, wherein the plurality of probe spots have an orientation that is selectable by varying a ratio of focusing powers of a magnetic lens and an electrostatic lens.

85. The source-conversion unit of claim 82, wherein the deflection angles enable the at least some of the plurality of beamlets to land on a surface of a sample perpendicularly or substantially perpendicularly.

86. The source-conversion unit of claim 82, wherein the deflection angles enable the at least some of the plurality of beamlets to obliquely land on a surface of a sample with a same or substantially same landing angles.

87. A multi-beam apparatus comprising:

an electron source configured to generate a charged-particle beam along a primary optical axis:

a source-conversion unit comprising:

a beamlet-limit device with a plurality of beam-limit openings configured to allow a plurality of beamlets of the charged-particle beam to pass through, and

an image-forming device movable along the primary optical axis and comprising a plurality of electron optics elements, wherein at least some of the plurality of electron optics are configured to deflect at least some of the plurality of beamlets towards the primary optical axis: and

an objective lens configured to focus the plurality of beamlets on a surface of a sample to form a plurality of probe spots.

88. The multi-beam apparatus of claim 87, wherein the deflection of the at least some of the plurality of beamlets towards the primary optical axis form a plurality of virtual images of the electron source.

89. The multi-beam apparatus of claim 87, wherein the objective lens comprises a magnetic lens and an electrostatic lens.

90. The multi-beam apparatus of claim 89, wherein the magnetic lens and the electrostatic lens are configured to enable a selection of an orientation of the plurality of probe by varying a ratio of focusing powers of the magnetic lens and the electrostatic lens.

91. The multi-beam apparatus of claim 87, wherein the plurality of probe spots have pitches that are varied together by moving the image-forming device along the primary optical axis.

92. The multi-beam apparatus of claim 87, wherein the at least some of the plurality of electron optics elements are configured to deflect at least some of the plurality of beamlets at deflection angles to reduce off-axis aberrations of the plurality of probe spots.

93. The multi-beam apparatus of claim 92, wherein the deflection angles enable the at least some of the plurality of beamlets to land on a surface of a sample perpendicularly or substantially perpendicularly.

94. The multi-beam apparatus of claim 92, wherein the deflection angles enable the at least some of the plurality of beamlets to obliquely land on a surface of a sample with same or substantially same landing angles.

95. The multi-beam apparatus of claim 87, further comprising a deflection scanning unit positioned above a front focal plan of the objective lens.

96. The multi-beam apparatus of claim 95, wherein the deflection scanning unit is configured to tilt the plurality of beamlets to obliquely land on the surface with a same or substantially the same landing angles.

97. The multi-beam apparatus of claim 87, further comprising a beamlet-tilting deflector positioned between the source-conversion unit and a front focal plan of the objective lens.

98. The multi-beam apparatus of claim 97, wherein the beamlet-tilting deflector is configured to tilt the plurality of beamlets to obliquely land on the surface with a same or substantially the same landing angles.

99. A method to configure a multi-beam apparatus for observing a surface of a sample, the method comprising:

forming a plurality of virtual images of an electron source using an image-forming device with electron optics elements, wherein the virtual images are used to form a plurality of probe spots on the surface; and

moving the image forming device along a primary axis to vary pitches of the plurality of probe spots.

100. The method of claim 99, further comprising forming the plurality of probe spots on the sample using an objective lens to image the plurality of virtual images on the surface.

* * * * *