US00RE49530E

(19) **United States**
(12) **Reissued Patent**
Barefoot et al.

(10) **Patent Number: US RE49,530 E**
(45) **Date of Reissued Patent: *May 16, 2023**

(54) **CRACK AND SCRATCH RESISTANT GLASS AND ENCLOSURES MADE THEREFROM**

(71) Applicant: **Corning Incorporated**, Corning, NY (US)

(72) Inventors: **Kristen L. Barefoot**, Corning, NY (US); **Matthew John Dejneka**, Corning, NY (US); **Sinue Gomez**, Corning, NY (US); **Timothy Michael Gross**, Corning, NY (US); **Nagaraja Shashidhar**, Painted Post, NY (US)

(73) Assignee: **CORNING INCORPORATED**, Corning, NY (US)

(*) Notice: This patent is subject to a terminal disclaimer.

(21) Appl. No.: **16/746,545**

(22) Filed: **Jan. 17, 2020**

Related U.S. Patent Documents

Reissue of:
(64) Patent No.: **9,290,407**
Issued: **Mar. 22, 2016**
Appl. No.: **14/082,847**
Filed: **Nov. 18, 2013**

U.S. Applications:
(63) Continuation of application No. 15/862,353, filed on Jan. 4, 2018, now Pat. No. Re. 47,837, which is an
(Continued)

(51) **Int. Cl.**
C03C 3/091 (2006.01)
C03B 33/02 (2006.01)
(Continued)

(52) **U.S. Cl.**
CPC ***C03C 3/091*** (2013.01); ***C03B 33/0222*** (2013.01); ***C03B 33/04*** (2013.01);
(Continued)

(58) **Field of Classification Search**
CPC C03C 3/091; C03C 3/097; C03C 21/002; C03C 21/00; C03B 33/0222; C03B 33/04;
(Continued)

(56) **References Cited**

U.S. PATENT DOCUMENTS

3,357,876 A 12/1967 Rinehart
3,524,737 A 8/1970 Doyle et al.
(Continued)

FOREIGN PATENT DOCUMENTS

DE 10130214 A1 1/2003
DE 102007009786 A1 8/2008
(Continued)

OTHER PUBLICATIONS

International Search Report and Written Opinion of the International Searching Authority; PCT/US10/46185; dated Mar. 22, 2011; 10 Pages; European Patent Office.
(Continued)

Primary Examiner — Jerry D Johnson
Assistant Examiner — Alan Diamond
(74) *Attorney, Agent, or Firm* — Troutman Pepper Hamilton Sanders LLP (Rochester)

(57) **ABSTRACT**

A glass and an enclosure, including windows, cover plates, and substrates for mobile electronic devices comprising the glass. The glass has a crack initiation threshold that is sufficient to withstand direct impact, has a retained strength following abrasion that is greater than soda lime and alkali aluminosilicate glasses, and is resistant to damage when scratched. The enclosure includes cover plates, windows, screens, and casings for mobile electronic devices and information terminal devices.

8 Claims, 8 Drawing Sheets

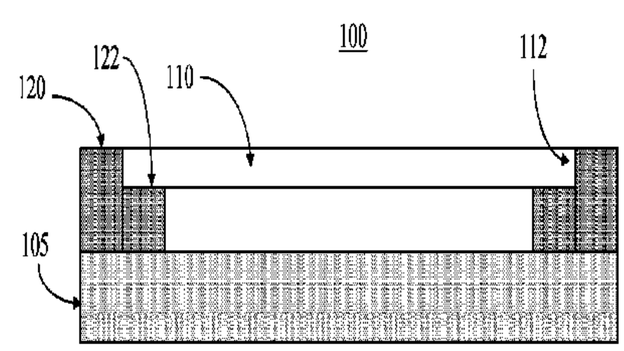

(a)

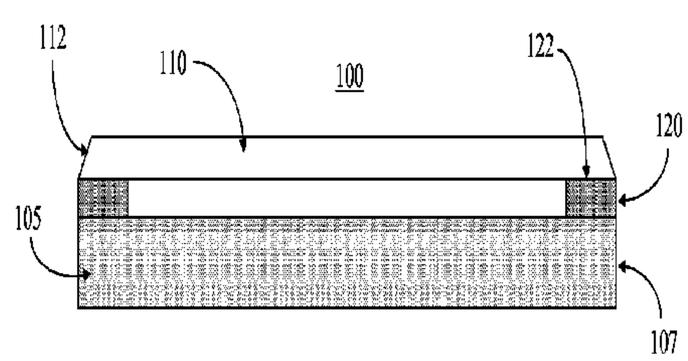

(b)

Related U.S. Application Data

application for the reissue of Pat. No. 9,290,407, which is a continuation of application No. 12/858,490, filed on Aug. 18, 2010, now Pat. No. 8,586,492.

(60) Provisional application No. 61/235,767, filed on Aug. 21, 2009.

(51) **Int. Cl.**

C03B 33/04	(2006.01)
C03B 33/09	(2006.01)
C03C 3/097	(2006.01)
C03C 21/00	(2006.01)

(52) **U.S. Cl.**
CPC ***C03B 33/091*** (2013.01); ***C03C 3/097*** (2013.01); ***C03C 21/002*** (2013.01); *Y02P 40/57* (2015.11); *Y10T 225/12* (2015.04); *Y10T 428/24777* (2015.01); *Y10T 428/315* (2015.01)

(58) **Field of Classification Search**
CPC C03B 33/091; Y02P 40/57; Y10T 225/12; Y10T 428/24777; Y10T 428/315
See application file for complete search history.

(56) **References Cited**

U.S. PATENT DOCUMENTS

3,772,135	A	11/1973	Hara et al.	
3,954,487	A	5/1976	Gliemeroth et al.	
4,018,965	A	4/1977	Kerko et al.	
4,166,745	A	9/1979	Araujo et al.	
4,259,118	A	3/1981	Sack	
4,396,720	A	8/1983	Beall et al.	
4,468,534	A	8/1984	Boddicker	
4,549,894	A	10/1985	Araujo et al.	
4,702,042	A	10/1987	Herrington et al.	
5,219,801	A	6/1993	Shorrock et al.	
5,277,946	A	1/1994	Nagai et al.	
5,489,558	A	2/1996	Moffatt et al.	
5,674,790	A	10/1997	Araujo	
5,741,745	A	4/1998	Sehgal et al.	
5,770,535	A	6/1998	Brix et al.	
5,801,109	A	9/1998	Nishizawa et al.	
5,876,472	A	3/1999	Gros et al.	
6,066,273	A	5/2000	Yamaguchi et al.	
6,096,670	A	8/2000	Lautenschlager et al.	
6,187,429	B1	2/2001	Weinberg et al.	
6,211,488	B1	4/2001	Hoekstra et al.	
6,268,304	B1	7/2001	Maeda et al.	
6,319,867	B1	11/2001	Chacon et al.	
6,329,310	B1	12/2001	Peuchert et al.	
RE37,920	E	12/2002	Moffatt et al.	
6,676,878	B2	1/2004	O'Brien et al.	
6,818,576	B2	11/2004	Ikenishi et al.	
6,831,029	B2	12/2004	Chacon et al.	
6,949,485	B2	9/2005	Nakashima et al.	
6,960,545	B2	11/2005	Wolff et al.	
6,992,026	B2	1/2006	Fukuyo et al.	
7,157,038	B2	1/2007	Baird et al.	
7,169,688	B2	1/2007	Liu	
7,341,966	B2	3/2008	Marques	
7,396,742	B2	7/2008	Fukuyo et al.	
7,482,296	B2	1/2009	Messerschmidt et al.	
7,547,613	B2	6/2009	Fukuyo et al.	
7,566,673	B2	7/2009	Kawai	
7,592,238	B2	9/2009	Fukuyo et al.	
7,615,721	B2	11/2009	Fukuyo et al.	
7,626,137	B2	12/2009	Fukuyo et al.	
7,666,511	B2	2/2010	Ellison et al.	
7,732,730	B2	6/2010	Fukuyo et al.	
7,825,350	B2	11/2010	Fukuyo et al.	
7,871,903	B2	1/2011	Couch et al.	
8,168,295	B2	5/2012	Murata	
8,232,218	B2	7/2012	Dejneka et al.	
8,586,492	B2 *	11/2013	Barefoot et al.	501/66
8,652,978	B2 *	2/2014	Dejneka et al.	501/66
8,759,238	B2	6/2014	Chapman et al.	
9,102,566	B2	8/2015	Sawada	
RE47,837	E	2/2020	Barefoot et al.	
2001/0038929	A1	11/2001	Uhlik et al.	
2003/0045420	A1	3/2003	Koyama et al.	
2003/0109370	A1	6/2003	Ikenishi et al.	
2004/0048729	A1	3/2004	Bitossi et al.	
2004/0132606	A1	7/2004	Wolff et al.	
2005/0090377	A1	4/2005	Shelestak et al.	
2005/0221044	A1	10/2005	Gaume et al.	
2005/0250639	A1	11/2005	Siebers et al.	
2006/0238100	A1	10/2006	Miyata et al.	
2006/0255195	A1	11/2006	Chen et al.	
2007/0090100	A1	4/2007	Yonai et al.	
2008/0090717	A1	4/2008	Nagashima et al.	
2008/0203894	A1	8/2008	Miyata et al.	
2008/0250639	A1	10/2008	Yang	
2008/0286548	A1	11/2008	Ellison et al.	
2009/0129061	A1	5/2009	Fechner et al.	
2009/0142568	A1	6/2009	Dejneka et al.	
2009/0176038	A1	7/2009	Komori et al.	
2009/0197048	A1	8/2009	Amin et al.	
2009/0202808	A1	8/2009	Glaesemann et al.	
2009/0220761	A1	9/2009	Dejneka et al.	
2010/0045721	A1	2/2010	Schaum et al.	
2010/0047521	A1	2/2010	Amin et al.	
2010/0055876	A1	3/2010	Fukuyo et al.	
2010/0151210	A1	6/2010	Ahimatani	
2010/0160141	A1	6/2010	Ikenishi et al.	
2010/0176100	A1	7/2010	Fukuyo et al.	
2010/0285272	A1	11/2010	Koval et al.	
2010/0285275	A1	11/2010	Baca et al.	
2011/0014475	A1	1/2011	Murata	
2011/0017297	A1	1/2011	Aitken et al.	
2011/0021004	A1	1/2011	Fukuyo et al.	
2011/0027971	A1	2/2011	Fukuyo et al.	
2011/0027972	A1	2/2011	Fukuyo et al.	
2011/0037149	A1	2/2011	Fukuyo et al.	
2011/0201490	A1	8/2011	Barefoot et al.	

FOREIGN PATENT DOCUMENTS

EP	0793132	A1	9/1997
GB	1212123	A	11/1970
GB	1329609	A	9/1973
JP	46-010430	B1	3/1971
JP	S4610430	B1	3/1971
JP	47-2274		1/1972
JP	47-002274	B	12/1974
JP	72002274	B	12/1974
JP	56104747	A	8/1981
JP	60141642	A	7/1985
JP	61053130	A	3/1986
JP	64042025	A	2/1989
JP	S6442025	A	2/1989
JP	03-177333	A	8/1991
JP	03237036	A	10/1991
JP	04083733	A	3/1992
JP	04119942	A	4/1992
JP	50069115	A	9/1993
JP	07053235	A	2/1995
JP	07-202274	A	8/1995
JP	11310431	A	11/1999
JP	2001106545	A	4/2001
JP	03177333	B2	6/2001
JP	2001305320	A	10/2001
JP	2002-192369	A	7/2002
JP	2004-268104	A	9/2004
JP	2004-299969	A	10/2004
JP	20662929	A	3/2006
JP	2006062929	A	3/2006
JP	2007-290304	A	11/2007
JP	2009-061462	A	3/2009
JP	2009-072829	A	4/2009
JP	2009203154	A	9/2009
JP	4490883	B2	6/2010
JP	2011213576	A	10/2011

(56) **References Cited**

FOREIGN PATENT DOCUMENTS

KR	10-0626553	B1	9/2006
KR	2007-0031467	A	3/2007
KR	10-0921662	B1	10/2009
KR	10-0934300	B1	12/2009
KR	10-0945980	B1	3/2010
WO	2007079077	A2	7/2007
WO	2009/070237		6/2009
WO	2009/070237	A1	6/2009
WO	2010021746	A1	2/2010
WO	2010/129624	A1	11/2010

OTHER PUBLICATIONS

U.S. Appl. No. 61/067,130; by Matthew J. Dejneka et al, titled "Fining Agents for Silicate Glasses", filed Feb. 26, 2008.
U.S. Appl. No. 61/067,732; by Matthew J. Dejneka et al, titled "Ion-Exchanged, Fast Cooled Glasses" filed on Feb. 29, 2008.
U.S. Appl. No. 61/079,995, by Douglas C. Allan et al, titled "Glass With Compressive Surface for Consumer Applications", filed Jul. 11, 2008.
U.S. Appl. No. 61/084,398, by Christopher M. Lee et al, titled "Dual Stage Ion Exchange for Chemical Strengthening of Glass", filed Jul. 29, 2008.
U.S. Appl. No. 61/087,324; by Kristen L. Barefoot et al, titled "Chemically Tempered Cover Glass", filed Aug. 8, 2008.
Deriano et al. "Physical and mechanical properties of a new borosilicate glass", Ann. Chim. Sci. Mat. 28 (2003) p. 55-62.
Deubener et al. "Crack ti fracture toughness of base glasses for dental restoration glass-ceramics using crack opening displacements" Journal of the Mechanical Behavior of Biomedical Materials 4 (2011) 1291-1298.
Hornberger et al. "Microstructure of a high strength alumina glass composite" Journal of Materials Research vol. 11 No. 4 (1996) p. 855-858.
Ito "Structural Study on Mechanical Behavior of Glass" Journal of the Ceramic Society of Japan 112 (9) 477-485 (2004).
Kato et al. "Effect of densification on crack initiation under Vickers indentation test" Journal of Non-Crystalline Solids 256 (2010) p. 1768-1773.
Seal et al. "Effect of phase separation on the fracture toughness of SiO2-B2O3-Na2O glass" Bull. Mater. Sci., vol. 28, No. 5, Aug. 2005, pp. 457-460.
West et al. "Silica Fracture Part III: Five and six fold ring contraction models", Journal of Materials Science 30 (1995) p. 6281-6287.
Wilantewicz "Vickers Indentation fracture inoptical glass compositions" Alfred University, 21 pgs.
Yoshida et al. "Crack growth in the high crack velocity region for binary sodium silicate glasses" Journal of the Ceramic Society of Japan 108 (10) p. 948-951 (2000).
Appen and Fu-si, "electrical properties of aluminosilicate, borosilicate, and aluminum borosilicate glasses" Solid State Physics 1(1), 1959. pp 1529-1537 (translation attached).
Levitsky and Papko, "effect of composition and structural factors on viscosity of borosilicate glasses and melts" Glass and Ceramics 2010, No. 11, pp. 6-9 (english translation attached).
Geisinger et al. "thermochemistry and structure of glasses along the join NaAlSi3O8-NaBSi3O8", Geochimica et Cosmochimica Acta, 1988, vol. 52, No. 10, p. 2405-2414.
Application No. 1533/DELNP/2012 Office Action Dated Jul. 23, 2018, India Patent Office.
Kingston, et al., "Compositional effects on fracture behaviour of alkali-silicate glasses," 2000 Blackwell Science Ltd., Fatigue Fract Engng Mater Struct 23, pp. 685-690.
Deriano, S., "Physical and Mechanical Properties of a New Borosilicate Glass," Annales de chimie-science des materiaux 28 (2003) pp. 55-62.
Deubener, J.., "Crack tip fracture toughness of base glasses for dental restoration glass-ceramics using crack opening displacements," Journal of the Mechanical Behavior of biomedical Materials 4 (2011) pp. 1291-1298.
Hornberger, H., "Microstructure of a high strength alumina glass composite", Journal of Materials Research 11 (1996) pp. 855-858.
Nakai, T., "Effect of aluminum ions on intrinsic sub-critical crack growth in metaphosphate glasses,", Journal of NonCrystalline Solids 353 (2007) pp. 2250-2257.
Seal, A., "Effect of phase separation on the fracture toughness of SiO2—B2O36—Na2O glass," Bulletin of Material Science, 28 (2005) pp. 457-460.
Sehgal, J, "Brittleness of glass," Journal of Non-Crystalline Solids 253 (1999) pp. 126-132.
Simmons, C., "Effects of Phase Separation on Crack Growth in borosilicage Glass," Journal of Non-Crystalline Solids 38 & 39 (1980) pp. 503-508.
Taniguchi, T., "Deformation and fracture of soda-lime-silica glass under tension by molecular dynamics simulation," Journal of the Ceramic Society of Japan 116 (2008) pp. 885-889.
West, J., "Silica fracture", Journal of Materials Science 30 (1995) pp. 6281-6287.
Yoshida, S., "Crack Growth in the High Cract Velocity Region for Binary Sodium Silicate Glasses," Journal of the Ceramic Society of Japan 108 (2000) pp. 958-961.
Morris, D.J., "indentations Crack Initiation in Ion-exchanged Aluminosilicate Glass," Journal of Materials Science, 39 (2004), pp. 2399-2410.
Gross, T.M., "A Glass with High Crack Initiation Load: Role of Fictive Temperature-Independent Mechanical Properties," Journal of Non-Crystalline Solids, 355 (2009), pp. 563-568.
Sehgal, Jeetendra, "A New Low-Brittleness Glass in the Soda-Line-Silicate Glass Family", Journal American Ceramic Society, 81 [9] pp. 2485-2488 (1998).
Ito, Setsuro, "Structural Study on Mechanical Behavior of Glass," Journal of the Ceramic Society of Japan, 112 [9] pp. 577-485 (2004.
Kato, Yoshinari, "Effect of Densification on Crack Initiation under Vickers Indentation Test," Journal of Non-Crystalline Solids 356 (2010) pp. 1768-1773.
Rizkala, A.S., "Effect of Nonbridging Oxygens on the Fracture Toughness of Synthesized Glasses," Br. Ceram. Trans. J., 91, pp. 12-15, 1992.
Yoshida, Satoshi, "Crack Initiation Behavior of Sodium Aluminosilicate Glasses," Journal of Non-Crystalline Solids, 344 (2004) pp. 37-43.
Wilantewicz, Trevor, "Vickers Indentation Fracture in Optical Glass Compositions," Fractrography of Glasses and Ceramics V pp. 131-151.

* cited by examiner

FIG. 1

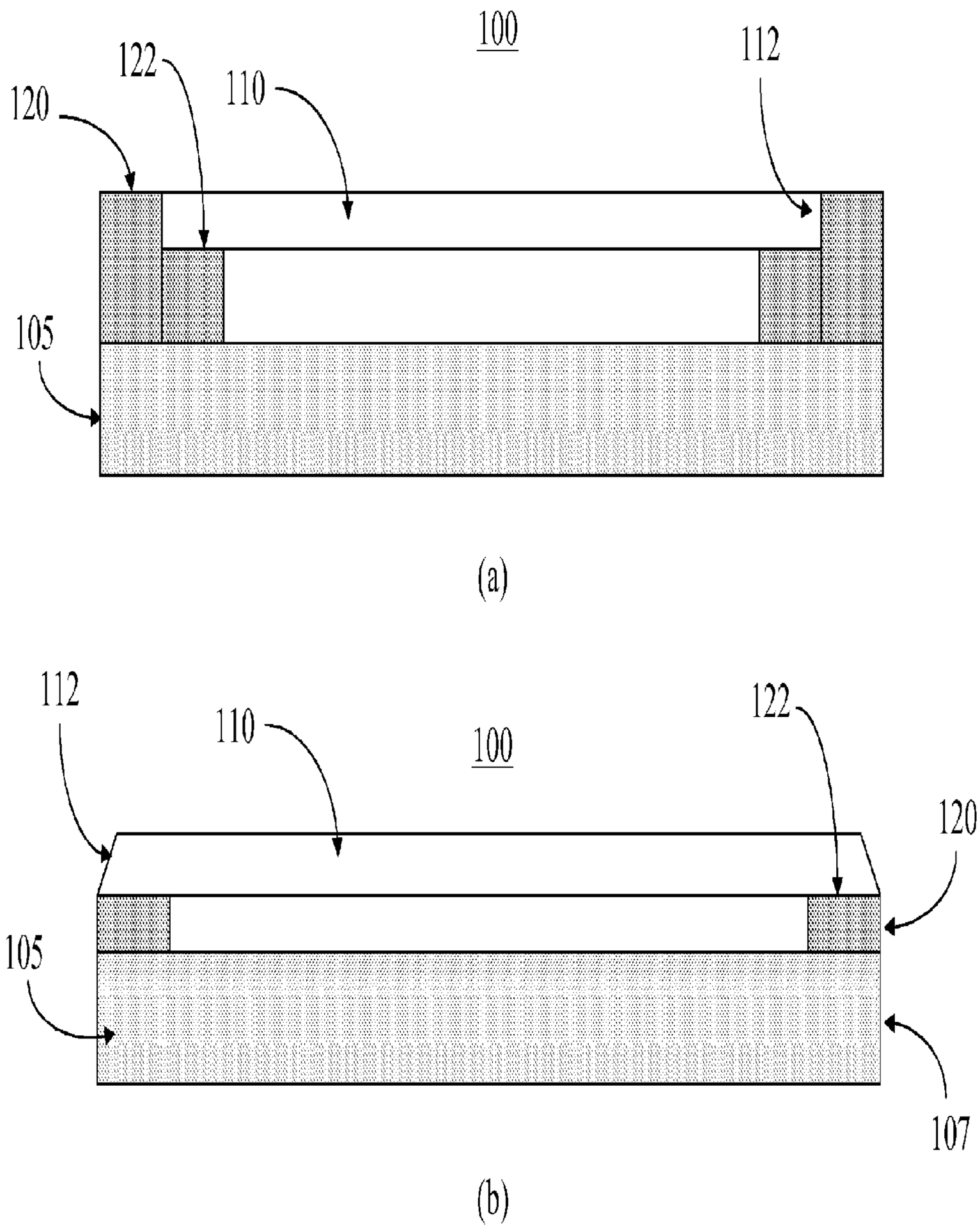

FIG. 2

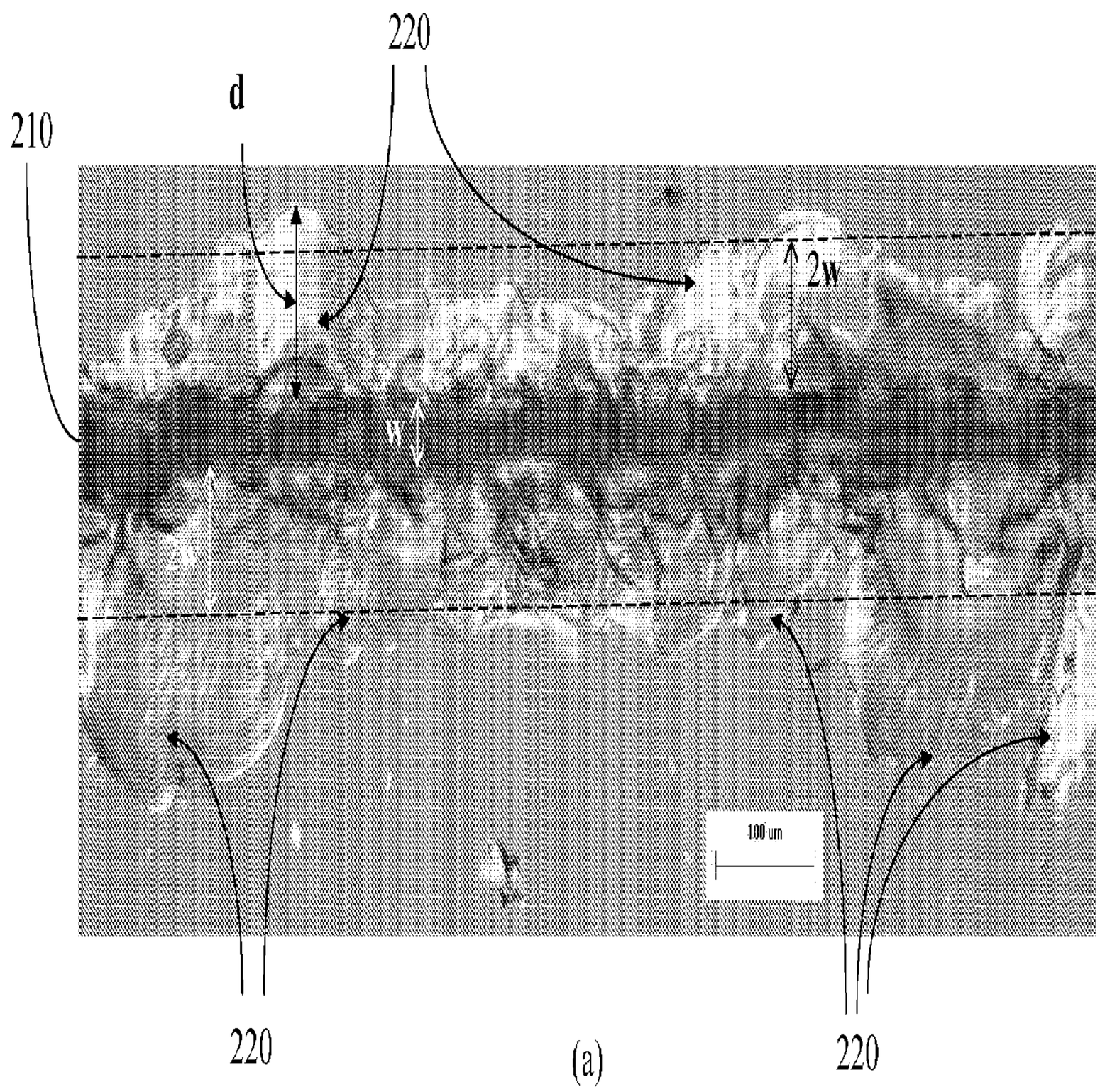

FIG. 2

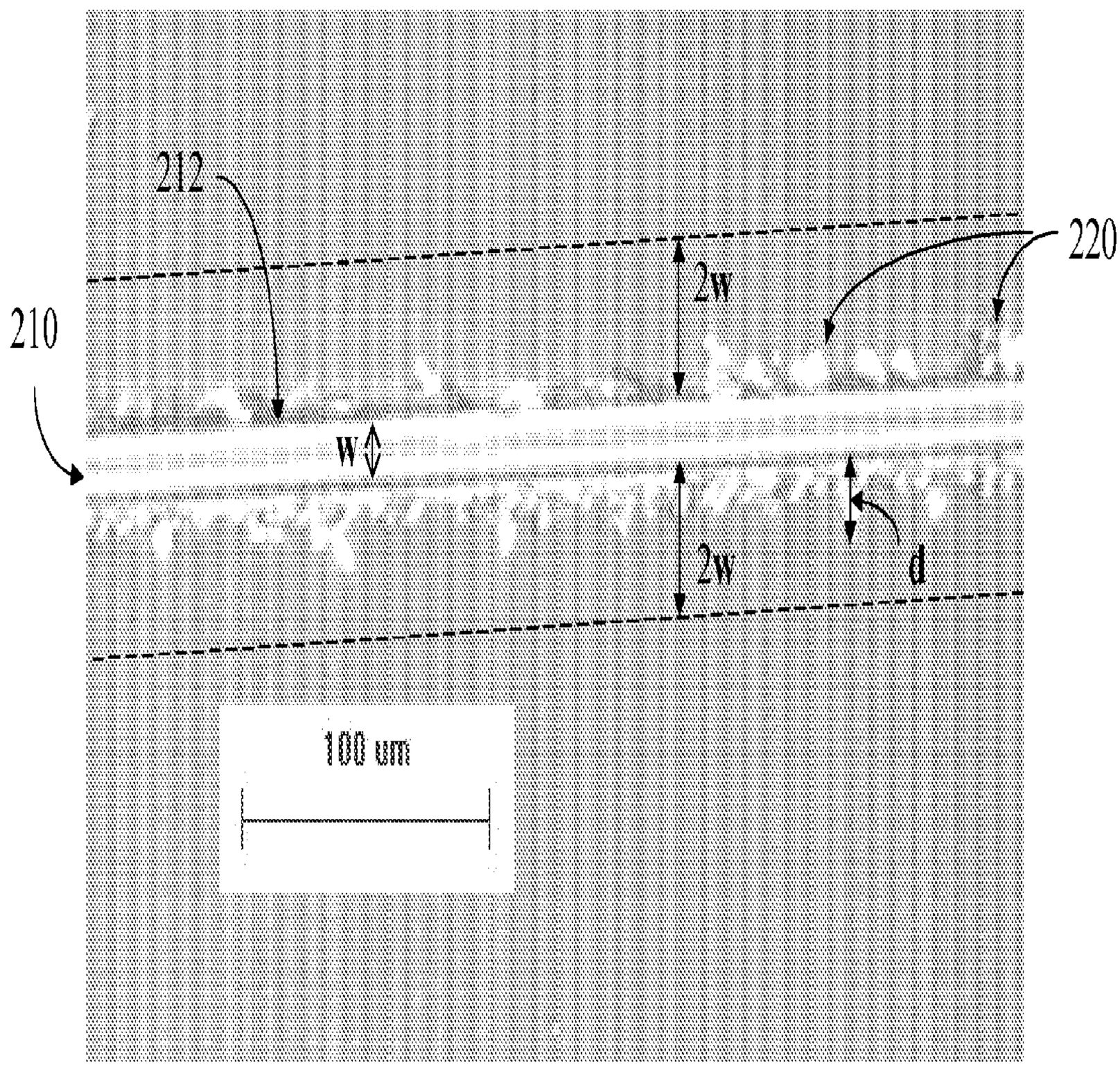

(b)

FIG. 3

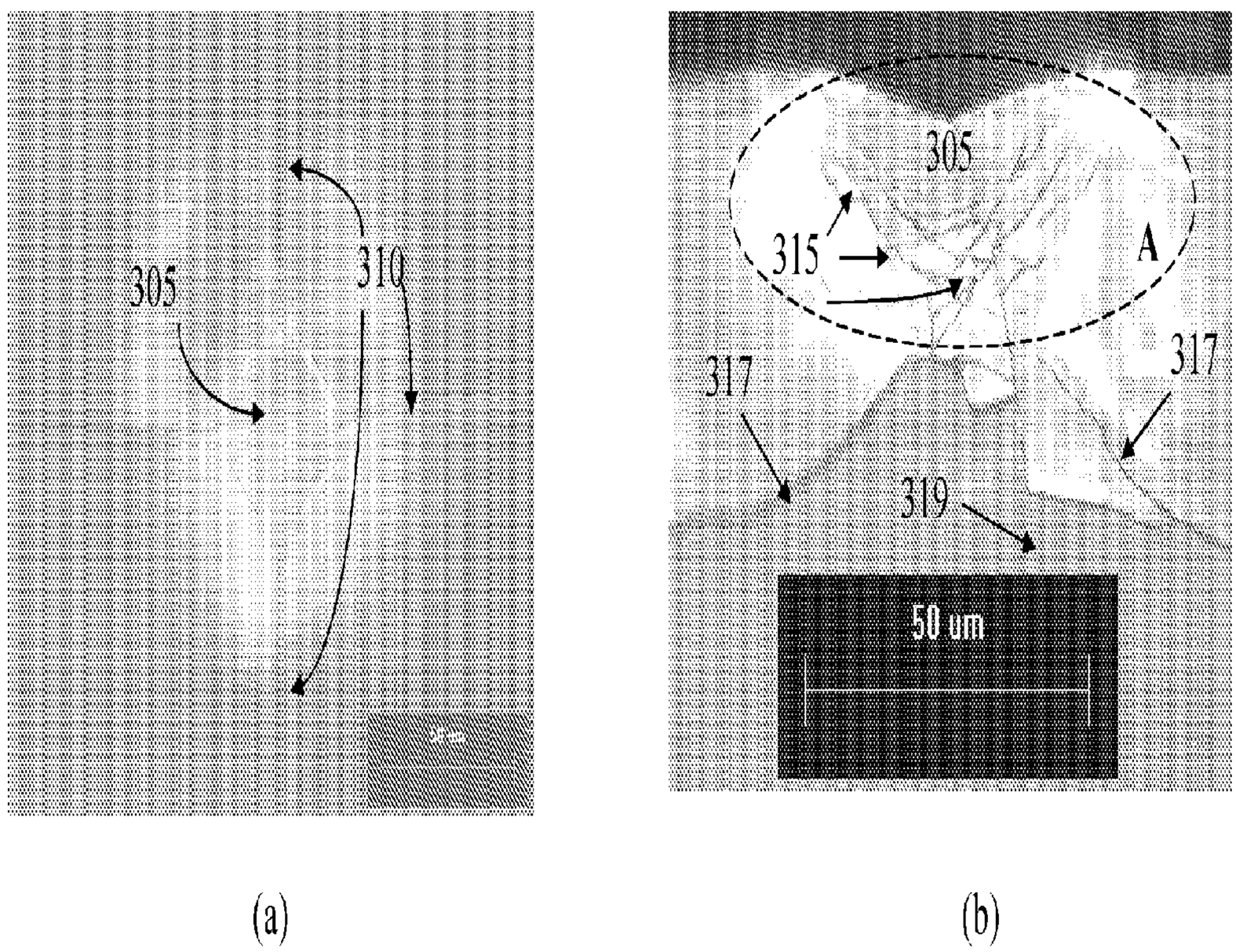

(a) (b)

FIG. 4

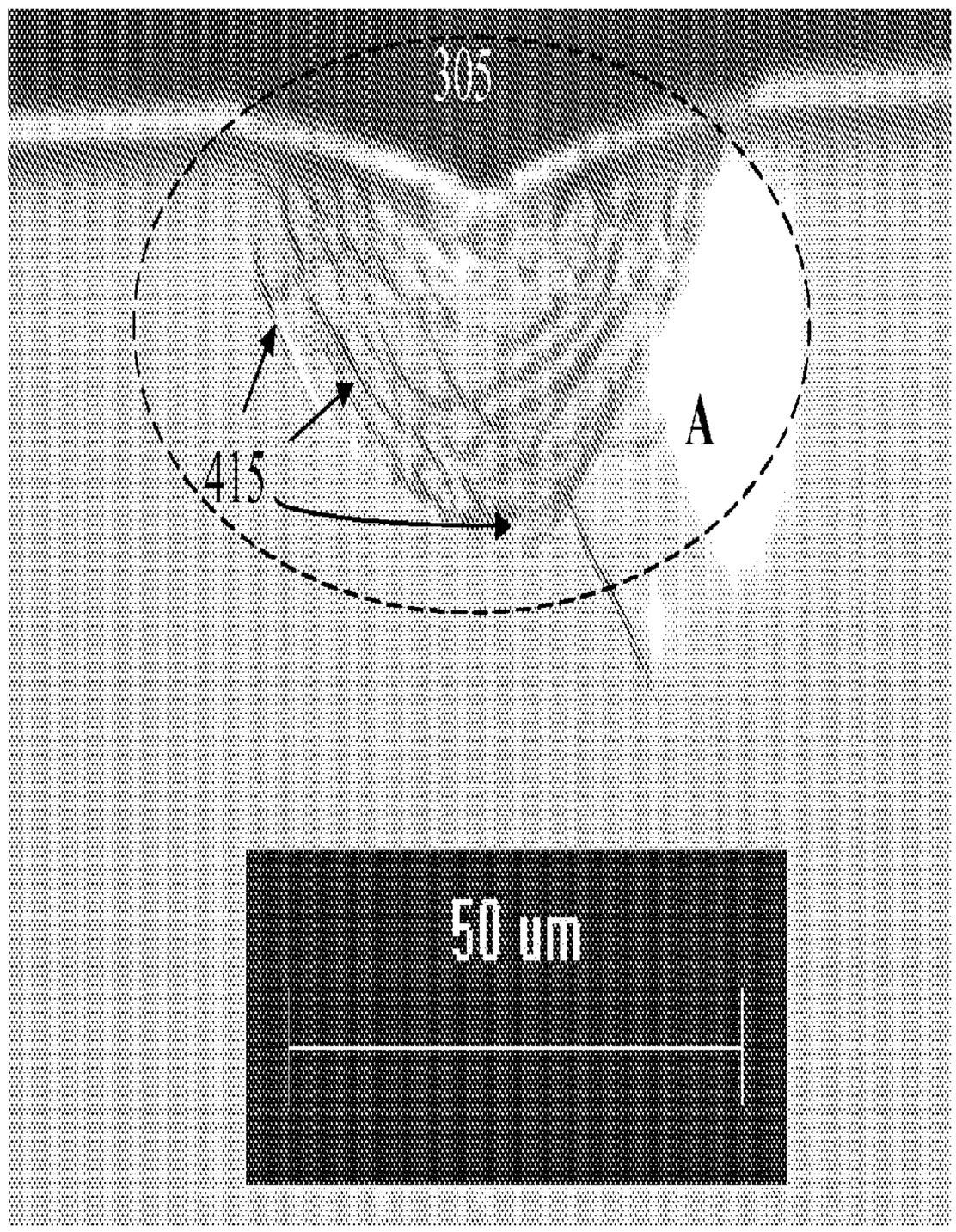

Prior Art

FIG. 5

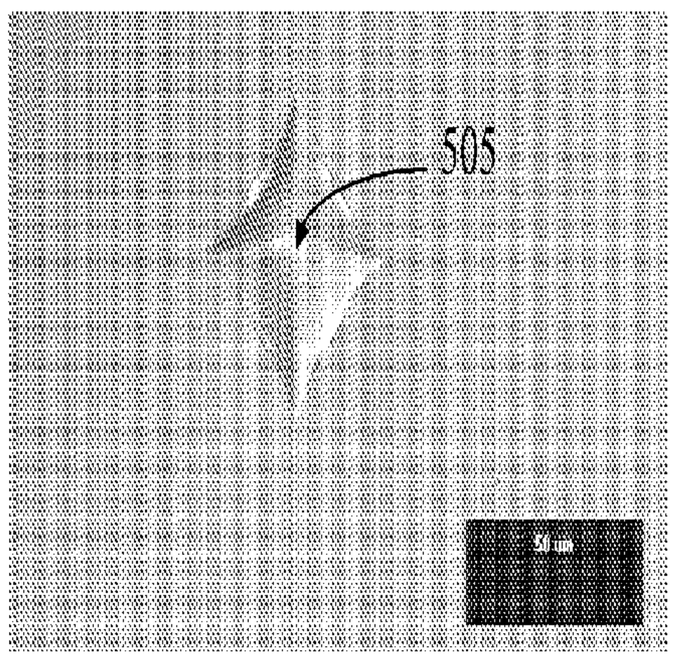

a

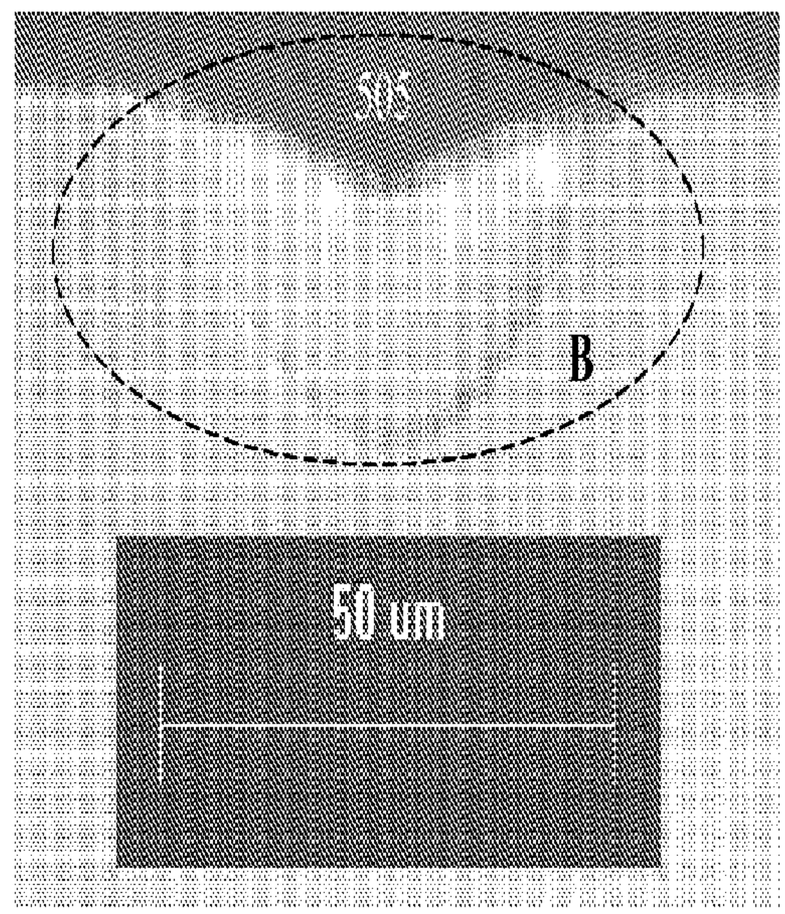

b

FIG. 6

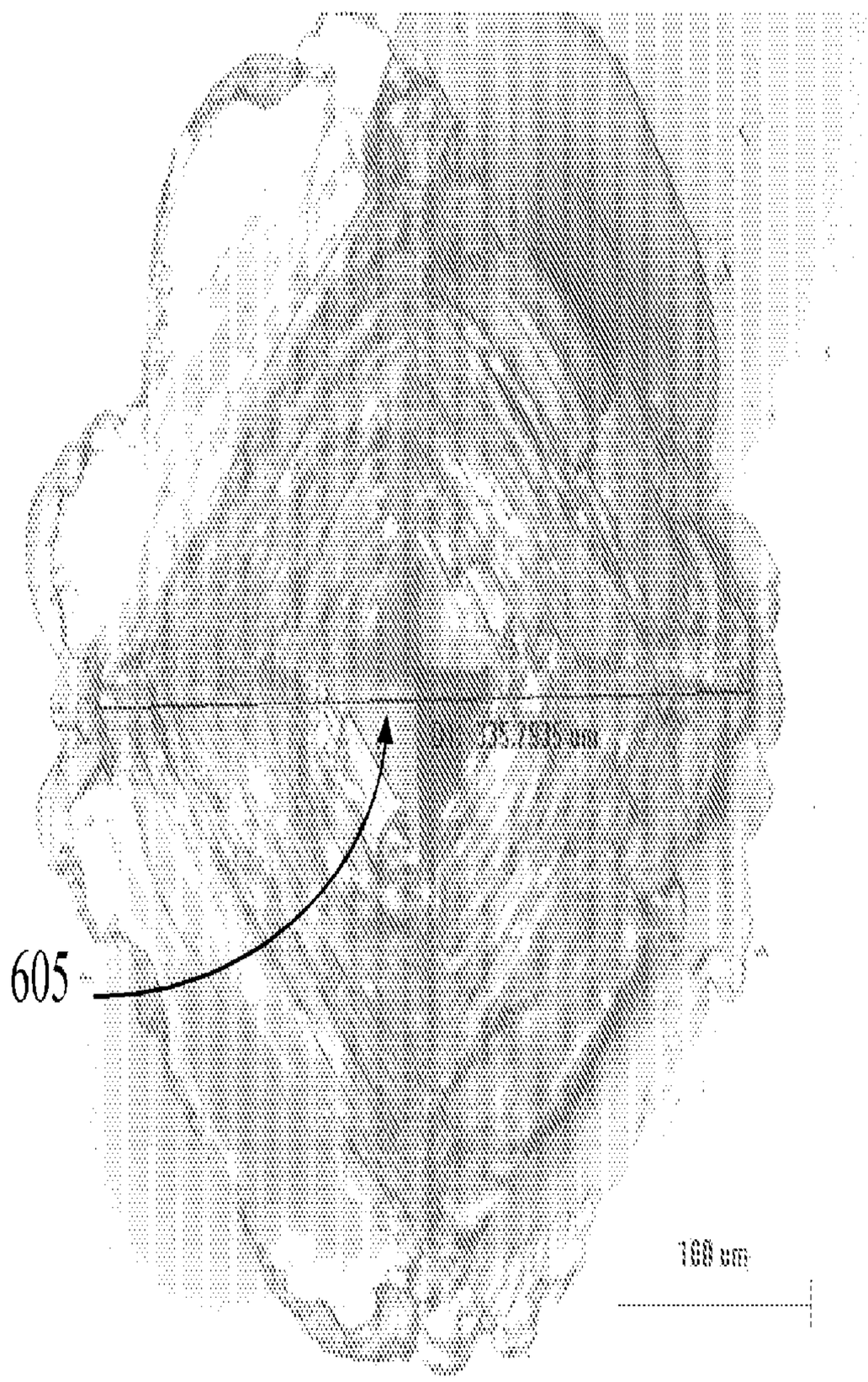

FIG. 7

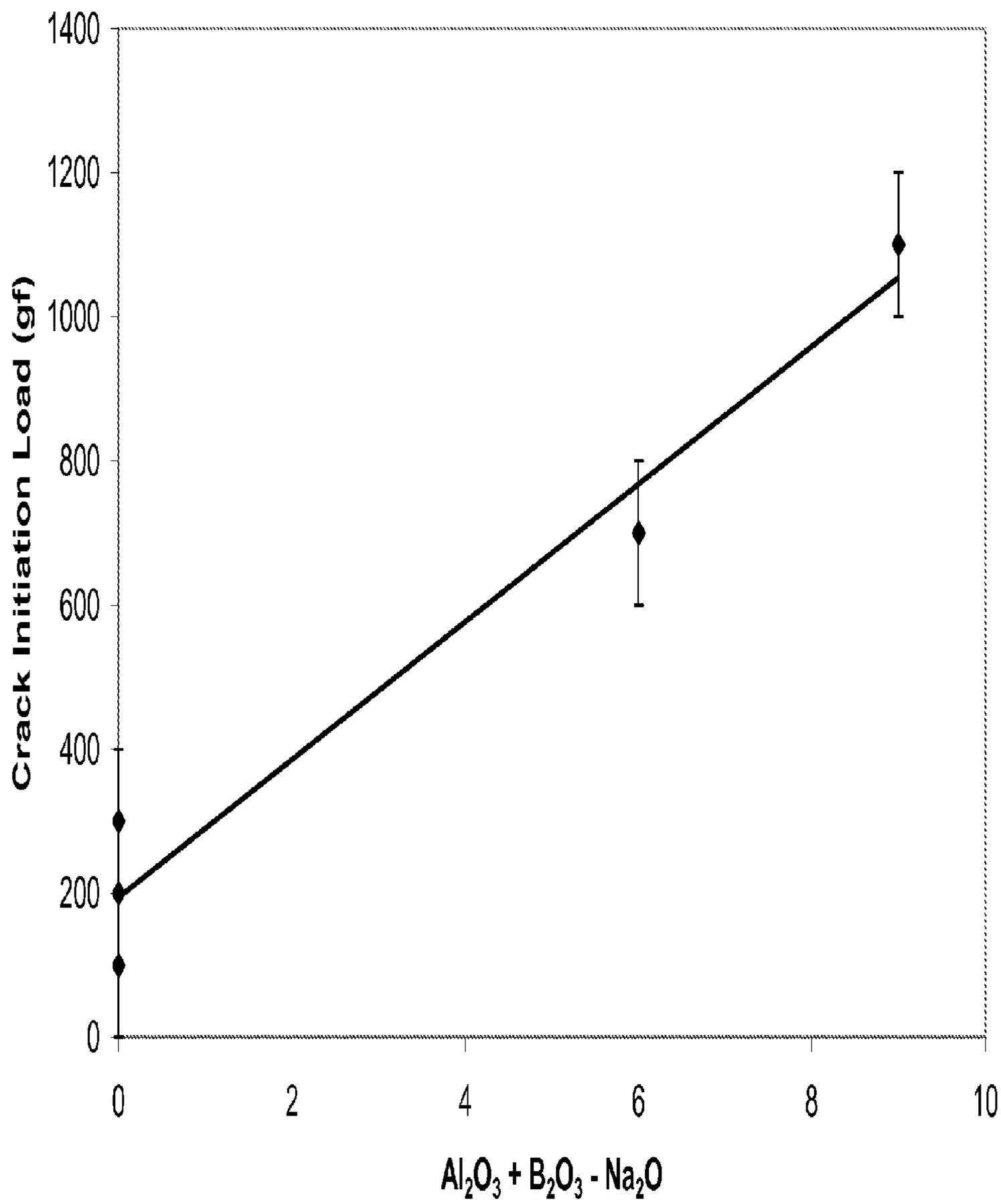
1400
1200
1000
800
600
400
200
0
Crack Initiation Load (gf)
0
2
4
6
8
10
$Al_2O_3 + B_2O_3 - Na_2O$

CRACK AND SCRATCH RESISTANT GLASS AND ENCLOSURES MADE THEREFROM

Matter enclosed in heavy brackets [ ] appears in the original patent but forms no part of this reissue specification; matter printed in italics indicates the additions made by reissue; a claim printed with strikethrough indicates that the claim was canceled, disclaimed, or held invalid by a prior post-patent action or proceeding.

CROSS REFERENCE TO RELATED APPLICATIONS

More than one reissue application has been filed for the reissue of U.S. Pat. No. 9,290,407. The reissue applications are the present application and U.S. patent application Ser. No. 15/862,353. This application is *a continuation reissue application of U.S. patent application Ser. No. 15/862,353, filed Apr. 1, 2018, which is an application for reissue of U.S. Pat. No. 9,290,407, issued Mar. 22, 2016, filed as U.S. patent application Ser. No. 14/082,847 on Nov. 18, 2013, which is* a continuation application of U.S. patent application Ser. No. 12/858,490, filed Aug. 18, 2010, now U.S. Pat. No. 8,586, 492, which claims the benefit of U.S. Provisional Application No. 61/235,767, filed Aug. 21, 2009, *each of which is incorporated herein by reference.*

BACKGROUND

The disclosure is related to glass enclosures, including windows, cover plates, and substrates for electronic devices. More particularly, the disclosure relates to crack- and scratch-resistant enclosures.

Glass is being designed into electronic devices, such as telephones, and entertainment devices, such as games, music players and the like, and information terminal (IT) devices, such as laptop computers. A predominant cause of breakage of cover glass in mobile devices is point contact or sharp impact. The solution for this problem has been to provide a bezel or similar protective structure to hold and protect the glass from such impacts. In particular, the bezel provides protection from impact on the edge of the glass. The edge of the cover glass is most vulnerable to fragmentation by direct impact. Incorporation of the bezel limits the use of glass to flat pieces in the device and prevents utilization of designs that exploit the crystal-like appearance of glass.

SUMMARY

A glass and a glass enclosure, including windows, cover plates, and substrates for mobile electronic devices comprising the glass are provided. The glass has a crack initiation threshold that is sufficient to withstand direct impact, a retained strength following abrasion that is greater than soda lime and alkali aluminosilicate glasses, and is more resistant to damage when scratched. The enclosure includes cover plates, windows, screens, touch panels, casings, and the like for electronic devices and information terminal devices. The glass can also be used in other applications, such as a vehicle windshield, where light weight, high strength, and durable glass is be desired.

Accordingly, one aspect of the disclosure is to provide an aluminoborosilicate glass comprising at least 50 mol % SiO_2 in some embodiments, at least 58 mol % SiO_2, in other embodiments, and at least 60 mol % SiO_2 in still other embodiments, and at least one modifier selected from the group consisting of alkali metal oxides and alkaline earth metal oxides. The aluminoborosilicate glass is ion exchangeable, and exhibits the ratio

$$\frac{Al_2O_3(\text{mol }\%) + B_2O_3(\text{mol }\%)}{\Sigma\text{modifiers (mol }\%)} > 1.$$

A second aspect of the disclosure is to provide an aluminoborosilicate glass. The aluminoborosilicate glass comprises: 50-72 mol % SiO_2; 9-17 mol % Al_2O_3; 2-12 mol % B_2O_3; 8-16 mol % Na_2O; and 0-4 mol % K_2O, wherein the ratio

$$\frac{Al_2O_3(\text{mol }\%) + B_2O_3(\text{mol }\%)}{\Sigma\text{modifiers (mol }\%)} > 1,$$

where the modifiers are selected from the group consisting of alkali metal oxides and alkaline earth metal oxides. The aluminoborosilicate glass is ion exchangeable.

A third aspect of the disclosure is to provide a glass enclosure for use in an electronic device. The glass enclosure comprises a strengthened glass that, when scratched with a Knoop diamond at a load of at least 5 N to form a scratch of width w, is free of chips having a size greater than three times the width w.

These and other aspects, advantages, and salient features will become apparent from the following detailed description, the accompanying drawings, and the appended claims.

BRIEF DESCRIPTION OF THE DRAWINGS

FIG. **1**a is an schematic representation of a prior art glass cover plate held in place by a bezel;

FIG. **1**b is a schematic representation of glass cover plate that is proud of the bezel;

FIG. **2**a is a microscopic image of an ion exchanged alkali aluminosilicate glass of the prior art having a scratch formed with a Knoop diamond at a load of 10 N;

FIG. **2**b is a microscopic image of a strengthened aluminoborosilicate glass having a scratch formed with a Knoop diamond at a load of 10 N;

FIG. **3**a is a top view of a 1 kilogram force (kgf) Vickers indentation **305** in a soda lime silicate glass of the prior art that had not been ion exchanged;

FIG. **3**b is a side or cross-sectional view of a 1 kgf Vickers indentation in a soda lime silicate glass of the prior art that had not been ion exchanged;

FIG. **4** is a side or cross-sectional view of a 1 kgf Vickers indentation of an ion-exchanged soda lime silicate glass of the prior art;

FIG. **5**a is a top view of a 1 kgf Vickers indentation in an aluminoborosilicate glass that had not been ion exchanged;

FIG. **5**b is a side or cross-sectional view of a 1 kgf Vickers indentation in an aluminoborosilicate glass that had not been ion exchanged;

FIG. **6** is top view of a 30 kgf Vickers indentation of a ion exchanged aluminoborosilicate glass; and

FIG. **7** is a plot of crack initiation thresholds measured of aluminoborosilicate glasses as a function of Al_2O_3+B_2O_3—Na_2O.

DETAILED DESCRIPTION

In the following description, like reference characters designate like or corresponding parts throughout the several

views shown in the figures. It is also understood that, unless otherwise specified, terms such as "top," "bottom," "outward," "inward," and the like are words of convenience and are not to be construed as limiting terms. In addition, whenever a group is described as comprising at least one of a group of elements and combinations thereof, it is understood that the group may comprise, consist essentially of, or consist of any number of those elements recited, either individually or in combination with each other. Similarly, whenever a group is described as consisting of at least one of a group of elements or combinations thereof, it is understood that the group may consist of any number of those elements recited, either individually or in combination with each other. Unless otherwise specified, a range of values, when recited, includes both the upper and lower limits of the range as well as any sub-ranges therebetween. Unless otherwise specified, all compositions and relationships that include constituents of compositions described herein are expressed in mole percent (mol %).

Referring to the drawings in general, it will be understood that the illustrations are for the purpose of describing particular embodiments and are not intended to limit the disclosure or appended claims thereto. The drawings are not necessarily to scale, and certain features and views of the drawings may be shown exaggerated in scale or in schematic in the interest of clarity and conciseness.

As used herein, the terms "enclosure," "cover plate," and "window" are used interchangeably and refer to glass articles, including windows, cover plates, screens, panels, and substrates, that form the outer portion of a display screen, window, or structure for mobile electronic devices.

Glass is being designed into mobile electronic devices, such as telephones, and entertainment devices, including games, music players and the like; information terminal (IT) devices, such as laptop computers; and analogous stationary versions of such devices.

In some instances, such designs are limited to a flat piece of glass that is protected by a bezel; i.e., a rim that is used to hold and protect a glass window or cover plate in a given device. An example of a glass cover plate or window that is held in place by a bezel is schematically shown in FIG. **1**a. Cover plate **110** rests in rim **122** of bezel **120**, which holds cover plate **110** in place on body **105** of device **100** and protects the edge **112** of cover plate **110** from sharp impacts.

In order to exploit the crystal-like appearance of glass windows, cover plates, and the like in such devices, designs are being extended to make the glass "proud" of the bezel. The term "proud of the bezel" means that the glass extends to the edge of the device and protrudes above and beyond any bezel or rim of the device. FIG. **1**b schematically shows an example of a glass cover plate **110** that is proud of the bezel **120** and is affixed to body **105** of device **100**. Glass cover plate **110** is mounted on the surface of bezel **120** such that edges **112** of glass cover plate **110** are exposed and otherwise not covered by bezel **120**. Edges **112** of cover plate **110** extend to the edges of **107** of body **105**.

The primary limitation to implementing a cover plate or window that is proud of the bezel in such designs is the inability of glass cover plate **110**—particularly edges **112**—to withstand direct impact, thus necessitating protection of edge **112** of glass cover plate **110** by bezel **120** (FIG. **1**a). Furthermore, a glass cover plate **110** that is proud of the bezel **120** (FIG. **1**b) will have a greater chance of being scratched during handling and use due to exposure of edge **112** of glass cover plate **110**. In order to implement the aforementioned new designs, a glass cover plate must therefore be better able to withstand direct impacts than those glasses that are presently used in such applications. Moreover, a glass must also be resistant to scratching and should have a high retained strength after being scratched or abraded.

The predominant cause of glass breakage in applications such as windshields or cover glass in electronic devices is point contact or sharp impact. To serve as a cover glass or other enclosure in such applications, the crack initiation load of the glass has to be sufficiently high so that it can withstand direct impact. The depth of the surface layers of the glass that are under compressive stress has to be sufficient to provide a high retained strength and increased resistance to damage incurred upon being scratched or abraded.

Accordingly, a glass or glass article that is more resistant to sharp impact and is be able to withstand direct or point impacts is provided. Such glass articles include a windshield or glass enclosure such as, but not limited to, a cover plate, window, casing, screen, touch panel, or the like, for electronic devices. The glass enclosure comprises a strengthened glass which does not exhibit lateral damage such as, but not limited to, chipping when scratched at a rate of 0.4 mm/s with a Knoop diamond that is oriented so that the angle between the leading and trailing edges of the tip of the Knoop diamond is 172°30' at a load of 5 N and, in some embodiments, at a load of 10 N. As used herein, "chipping" refers to the removal or ejection of glass fragments from a surface of a glass when the surface is scratched with an object such as a stylus. As used herein, "chip" can refer to either a glass fragment removed during scratching of the glass surface or the region on the surface from which the chip is removed. In the latter sense, a chip is typically characterized as a depression in the vicinity of the scratch. When scratched, the glass article described herein does not exhibit chipping (i.e., chips are not generated, or the glass is free of chips) beyond a region extending laterally on either side of the scratch track (i.e., the scratch formed by the Knoop diamond) formed for a distance d that is greater than twice the width w of the scratch and, in another embodiment, three times the width w of the scratch. In other words, chipping generated by scratching is limited to a region bordering either side of the scratch track, wherein the width of the region is no greater than twice (in some embodiment, no greater than three times) the width w of the scratch. In one embodiment, the glass enclosure is proud of a bezel, extending above and protruding beyond the bezel, in those instances where a bezel is present. In one embodiment, the glass enclosure has a thickness in a range from about 0.1 mm up to about 2.0 mm. In another embodiment, the glass enclosure has a thickness in a range from about 0.1 mm up to about 2.3 mm and, in other embodiments, the glass enclosure has a thickness of up to about 5.0 mm.

The scratch resistance or response of a glass enclosure to scratching is illustrated in FIG. **2**a. The glass shown in FIG. **2**a is an alkali aluminosilicate glass having the composition 66 mol % SiO_2, 10.3 mol % Al_2O_3, 0.6 mol % B_2O_3, 14 mol % Na_2O, 2.45 mol % K_2O, and 0.21 mol % SnO_2, wherein the ratio $(Al_2O_3+B_2O_3)/\Sigma(\text{modifiers})$, expressed in mol %, is 0.66. The glass was strengthened by ion exchange by immersion in a molten KNO_3 salt bath at 410° C. for 8 hrs. FIG. **2**a is a microscopic image of the glass having a scratch **210** of width w formed at a rate of 0.4 mm/s with a Knoop diamond at a load of 10 N. Numerous chips **220** are formed along scratch **210**, with some chips extending from scratch **210** for a distance d exceeding twice the width w (2w) of scratch **210**. In contrast to the behavior of the glass shown in FIG. **2**a, the response of the glass enclosure and glasses described herein to scratching is illustrated in FIG. **2**b. FIG.

2b is a microscopic image of an aluminoborosilicate glass (64 mol % SiO_2, 14.5 mol % Al_2O_3, 8 mol % B_2O_3, 11.5 mol % Na_2O, 0.1 mol % SnO_2; wherein the ratio $(Al_2O_3+B_2O_3)/\Sigma$(modifiers), wherein Al_2O_3, B_2O_3, and Na_2O modifier concentrations are expressed in mol %, is 1.96) that is representative of those aluminoborosilicate glasses described herein. The glass shown in FIG. **2**b was ion exchanged by immersion in a molten KNO_3 salt bath at 410° C. for 8 hrs. The glass shown in FIG. **2**b has a scratch **210** of width w formed with a Knoop diamond at a load of 10 N. The chips **220** formed in the aluminoborosilicate glass shown in FIG. **2**b are significantly smaller than those seen in FIG. **2**a. In FIG. **2**b, chip formation is limited to a zone extending from an edge **212** of scratch **210** to a distance d. The width d of the zone or region in which such chipping occurs is significantly less than 2w. In other words, most of the chips **220** seen in FIG. **2**b extend for a distance d, which is less than about width w from crack **210**. The glass retains at least 30% of its original load at failure and, in some embodiments, at least 50% of its original load at failure as a determined by ring on ring measurements after scratching with a 3 N Vickers load at a rate of 0.4 mm/s.

The glass enclosures described herein comprise a strengthened glass that deforms upon indentation under an indentation load of at least 500 gf primarily by densification rather than by shear faulting. The glass is free of subsurface faulting and radial and median cracks upon deformation and is consequently more resistant to damage than typical ion-exchangeable glasses. In addition, the glass is more resistant to crack initiation by shear faulting when strengthened by ion exchange. In one embodiment, the glass enclosure comprises an ion exchanged glass and has a Vickers median/radial crack initiation threshold of at least 10 kilogram force (kgf). In a second embodiment, the glass enclosure has a Vickers median/radial crack initiation threshold of at least about 20 kgf and, in a third embodiment, the glass enclosure has a Vickers median/radial crack initiation threshold of at least about 30 kgf. Unless otherwise specified, the Vickers median/radial crack threshold is determined by measuring the onset of median or radial cracks in 50% relative humidity at room temperature.

In another embodiment, the glass enclosures described herein are non-frangible. As used herein, the term "non-frangible" means that the glass enclosures and the glass comprising the glass enclosures do not exhibit forceful fragmentation upon fracture. Such forceful fragmentation is typically characterized by multiple crack branching with ejection or "tossing" of small glass pieces and/or particles from the glass enclosure in the absence of any external restraints, such as coatings, adhesive layers, or the like. More specifically frangible behavior is characterized by at least one of: breaking of the strengthened glass article (e.g., a plate or sheet) into multiple small pieces (e.g., ≤1 mm); the number of fragments formed per unit area of the glass article; multiple crack branching from an initial crack in the glass article; and violent ejection of at least one fragment a specified distance (e.g., about 5 cm, or about 2 inches) from its original location; and combinations of any of the foregoing breaking (size and density), cracking, and ejecting behaviors. The glass enclosure and the glass comprising the enclosure are deemed to be substantially non-frangible if they do not exhibit any of the foregoing criteria.

The strengthened glass comprising the glass enclosure can be strengthened by either thermal or chemical processes known in the art. The glass, in one embodiment, can be thermally tempered by heating the glass at a temperature that is between the strain point and the softening point of the glass, followed by cooling to room temperature. In another embodiment, the glass is chemically strengthened by ion exchange in which smaller metal ions in the glass are replaced or "exchanged" by larger metal ions of the same valence within a layer of the glass that extends from the outer surface of the glass to a depth below the surface (commonly referred to as the "depth of layer" or "DOL"). The replacement of smaller ions with larger ions creates a compressive stress within the layer. In one embodiment, the metal ions are monovalent alkali metal ions (e.g., Na^+, K^+, Rb+, and the like), and ion exchange is accomplished by immersing the glass in a bath comprising at least one molten salt (e.g., KNO_3, K_2SO_4, KCl, or the like) of the larger metal ion that is to replace the smaller metal ion or ions (e.g., Na^+ ions) in the glass. Alternatively, other monovalent cations such as Ag^+, Tl^+, Cu^+, and the like can be exchanged for the alkali metal cations in the glass. The ion exchange process or processes that are used to strengthen the glass can include, but are not limited to, immersion in a single bath or multiple baths of like or different compositions with washing and/or annealing steps between immersions.

The depth of the compressive stress layer (depth of layer) present in ion-exchanged glasses prevents the propagation of flaws at or near the surface of the glass. Glasses such as soda lime silicate and alkali aluminosilicate glasses deform with a high shear band density. Such behavior is known to lead to crack nucleation and propagation in the non-ion exchanged versions of such glasses. An example of shear fault formation and crack initiation is shown in FIGS. **3**a and **3**b. FIGS. **3**a and **3**b are top and side (i.e., cross-sectional) views, respectively, of a 1 kilogram force (kgf) Vickers indentation **305** in a soda lime silicate glass that has not been ion exchanged. Radial cracks **310** extend from the Vickers indentation **305** (FIG. **3**a) and shear deformation zone A. Lateral cracks **317**, median cracks **319**, and subsurface shear faults **315** are seen in the side view of the glass (FIG. **3**b). Shear faults **315** serve as initiation sites for lateral and median cracks **317**, **319**.

The compressive stress created in the surface layers of ion exchanged glasses prevents or mitigates the propagation of nucleated cracks, but does not totally eliminate shear deformation. FIG. **4** is a cross-sectional view of a 1 kgf Vickers indentation of an ion-exchanged soda lime silicate glass having a compressive stress of 400 MPa and a depth of layer of 13 μm. Although mitigated, deformation still occurs by the shearing mechanism and leads to crack initiation, as seen in the shear deformation zone A. The compressive layer prevents radial cracks **310** from extending far away from their nucleation sites in the shear deformation zone A. Under flexural loading, subsurface cracks **415** overcome the compressive stress created by ion exchange and propagate into the central tensile region of the glass, thereby causing failure.

To improve the mechanical properties of glass enclosures beyond those of currently available ion-exchanged glasses, a glass having higher damage resistance is needed. Accordingly, the glass enclosure described herein comprises an ion-exchanged glass that does not exhibit deformation by subsurface shear faulting, but instead exhibits indentation deformation by densification when submitted to an indentation load of at least 500 gf, which makes flaw/crack initiation more difficult. An example of deformation by densification is shown in FIGS. **5**a and **5**b, which are top and side views, respectively, of a 1 kilogram force (kgf) Vickers indentation in an alkaline earth aluminoborosilicate (EAGLE XG™, manufactured by Corning, Inc.) glass that has not been strengthened by ion exchange. The top view

(FIG. **5**a) shows no radial cracks extending from the Vickers indentation **505**. As seen in the cross-sectional view (FIG. **5**b), the glass deforms primarily by densification (region "B" in FIG. **5**b) with no shear faulting. A top view of a 30 kgf Vickers indentation of an aluminoborosilicate glass having the composition: 64 mol % SiO_2, 14.5 mol % Al_2O_3, 8 mol % B_2O_3, 11.5 mol % Na_2O, and 0.1 mol % SnO_2; wherein the ratio $(Al_2O_3+B_2O_3)/\Sigma(\text{modifiers})$, with Al_2O_3, B_2O_3, and Na_2O modifier concentrations expressed in mol %, is 1.96, and strengthened by ion exchange by immersion in a molten KNO_3 salt bath at 410° C. for 8 hours is shown in FIG. **6**. At maximum load, the indenter tip has a depth of about 48 μm. No radial cracks extend from Vickers indentation **605**.

The densification mechanism described hereinabove can be attributed to the absence or lack of non-bridging oxygens (NBOs) in the glass structure, high molar volume (at least 27 cm^3/mol), and low Young's modulus (less than about 69 GPa) of the glass. In the aluminoborosilicate glasses described herein, a structure having substantially no non-bridging oxygens (NBO-free) is achieved through compositions in which the relationship

$$\frac{Al_2O_3(\text{mol }\%) + B_2O_3(\text{mol }\%)}{\Sigma\text{modifiers (mol }\%)} > 1, \quad (1)$$

where Al_2O_3 and B_2O_3 are intermediate glass formers and alkali metal (e.g., Li_2O, Na_2O, K_2O, Rb_2O, Cs_2O) and alkaline earth metal oxides (e.g., MgO, CaO, SrO, BaO) are modifiers, is satisfied. Such modifiers are intentionally or actively included in the glass composition, and do not represent impurities that are inadvertently present in the batched material used to form the glass. To obtain sufficient depth of layer and compressive stress by ion exchange, it is preferable that $0.9<R_2O/Al_2O_3<1.3$, wherein Al_2O_3 and R_2O modifier concentrations are expressed in mol %. Given a particular compressive stress and compressive depth of layer, any ion-exchangeable silicate glass composition that obeys equation (1) and contains alkali metals (e.g., Li^+, Na^+, K^+) should have a high resistance to both crack initiation and crack propagation following ion exchange. Prior to ion exchange, such aluminoborosilicate glasses have a Vickers median/radial crack initiation threshold of at least 500 gf and, in one embodiment, the glasses have Vickers median/radial crack initiation threshold of at least 1000 gf.

In some embodiments, the glass enclosure comprises, consists essentially of, or consists of a strengthened glass that, when ion exchanged, is resistant to damage, such as crack initiation and propagation. The glass comprises at least 50 mol % SiO_2 in some embodiments, at least 58 mol % SiO_2 in some embodiments, at least 60 mol % SiO_2 in other embodiments, and includes at least one alkali metal modifier, wherein the ratio $(Al_2O_3+B_2O_3)/\Sigma(\text{modifiers})>1$, wherein Al_2O_3, B_2O_3, and modifier concentrations are expressed in mol %, and wherein the modifiers are selected from the group consisting of alkali metal oxides and alkaline earth metal oxides. In some embodiments, $(Al_2O_3+B_2O_3)/\Sigma(\text{modifiers})\geq 1.45$. As the value of this ratio increases, the damage resistance of the glass increases. In addition, an increase in the ratio or a substitution of B_2O_3 for Al_2O_3 results in a decrease in Young's modulus. In one embodiment, the Young's modulus of the aluminoborosilicate glass is less than about 69 GPa. In one embodiment, the Young's modulus of the aluminoborosilicate glass is less than about 65 GPa. In another embodiment, the Young's modulus of the aluminoborosilicate glass is in a range from about 57 GPa up to about 69 GPa. In another embodiment, the strengthened glass of the glass enclosure has a compressive stress of at least about 400 MPa and a depth of layer of at least about 15 μm, in another embodiment, at least about 25 μm, and, in yet another embodiment, at least about 30 μm.

In one embodiment, the glass enclosure comprises, consists essentially of, or consists of an ion exchangeable aluminoborosilicate glass that has been strengthened, for example, by ion exchange. As used herein, "ion exchangeable" means that a glass is capable of exchanging cations located at or near the surface of the glass with cations of the same valence that are either larger or smaller in size. In a particular embodiment, the aluminoborosilicate glass comprises, consists essentially of, or consists of: 50-72 mol % SiO_2; 9-17 mol % Al_2O_3; 2-12 mol % B_2O_3; 8-16 mol % Na_2O; and 0-4 mol % K_2O, wherein $(Al_2O_3+B_2O_3)/\Sigma(\text{modifiers})>1$, and has a molar volume of at least 27 cm^3/mol. In another embodiment, the aluminoborosilicate glass comprises, consists essentially of, or consists of: 60-72 mol % SiO_2; 9-16 mol % Al_2O_3; 5-12 mol % B_2O_3; 8-16 mol % Na_2O; and 0-4 mol % K_2O, wherein the ratio of concentrations of Al_2O_3 and B_2O_3 to the total concentrations of modifiers, $(Al_2O_3+B_2O_3)/\Sigma(\text{modifiers})$, is greater than 1, and has a molar volume of at least 27 cm^3/mol. In the above embodiments, the modifiers are selected from alkali metal oxides (e.g., Li_2O, Na_2O, K_2O, Rb_2O, Cs_2O) and alkaline earth metal oxides (e.g., MgO, CaO, SrO, BaO). In some embodiments, the glass further includes 0-5 mol % of at least one of P_2O_5, MgO, CaO, SrO, BaO, ZnO, and ZrO_2. In other embodiments, the glass is batched with 0-2 mol % of at least one fining agent selected from a group that includes Na_2SO_4, NaCl, NaF, NaBr, K_2SO_4, KCl, KF, KBr, and SnO_2. The aluminoborosilicate glass is, in some embodiments, substantially free of lithium, whereas in other embodiments, the aluminoborosilicate glass is substantially free of at least one of arsenic, antimony, and barium. In other embodiments, the aluminoborosilicate glass is down-drawable by processes known in the art, such as slot-drawing, fusion drawing, re-drawing, and the like, and has a liquidus viscosity of at least 130 kilopoise.

Various non-limiting compositions of the aluminoborosilicate glasses described herein are listed in Table 1. Table 1 also includes properties measured for these glass compositions. Crack initiation thresholds were measured by making multiple indentations (indents) in the glass using a Vickers diamond indenter loaded onto the surface. The load was increased until formation of median or radial cracks extending out from the corners of the indent impression was observed at the surface of the glass in greater than 50% of indents. Crack initiation thresholds for the samples listed in Table 1 are plotted in FIG. **7** as a function of $Al_2O_3+B_2O_3—Na_2O$ in the glass samples.

Samples a, b, c, and d in Table 1 have compositions that are nominally free of non-bridging oxygens; i.e., $Al_2O_3+B_2O_3=Na_2O$, or $Al_2O_3+B_2O_3—Na_2O=0$ (i.e. $(Al_2O_3+B_2O_3)/\Sigma(\text{modifiers})=1$). Regardless of whether B_2O_3 or Al_2O_3 is used to consume the NBOs created by the presence of the Na_2O modifier in these sample compositions, all of the above samples exhibited low (i.e., 100-300 gf) crack initiation thresholds.

In samples e and f, however, an excess of B_2O_3 is created by increasing the Al_2O_3 content while decreasing the concentration of alkali metal oxide modifiers. For samples e and f, $(Al_2O_3+B_2O_3)/\Sigma(\text{modifiers})>1$. In these samples, the crack initiation threshold increases dramatically, as shown in FIG. **7**. Specifically, sample e exhibited a crack initiation

threshold of 700 gf prior to strengthening by ion exchange, whereas sample f exhibited a crack initiated threshold of 1000 gf prior to strengthening.

Non-limiting examples of the aluminoborosilicate glasses described herein are listed Table 2, which lists various compositions and properties of glasses. Several compositions (**34**, **35**, **36**, **37**, **38**, and **39**), when ion exchanged, have crack initiation thresholds that are less than 10 kgf. These compositions are therefore outside the scope of the disclosure and appended claims and thus serve as comparative examples. Among the properties listed in Table 2 is the coefficient of thermal expansion (CTE), given in units of $1\times10^{-7}/°$ C. CTE is one consideration that is taken into account when designing devices that develop minimal thermal stresses upon temperature changes. Glasses having lower CTEs are desirable for down-draw processes (e.g., fusion-draw and slot-draw) to minimize sheet distortion during the drawing process. The liquidus temperature and corresponding liquidus viscosity (expressed in kP (kilopoise) or MP (megapoise)) indicate the suitability of glass compositions for hot forming the glass into sheets or other shapes. For down-draw processes, it is desirable that the aluminoborosilicate glasses glass described herein have a liquidus viscosity of at least 130 kP. The 200P temperature is the temperature at which the glass has a viscosity of 200 Poise, and is the process temperature typically used in manufacturing to remove gaseous inclusions (fining) and melt any remaining batch materials. The columns labeled 8 and 15 hr DOL and CS in Table 2 are the depth of the compressive layer and the surface compressive stress resulting from ion exchange in 100% KNO_3 at 410° C. in 8 and 15 hours, respectively.

To maintain desirable ion exchange properties for the glasses described herein, the total alkali metal oxide modifier concentration should equal that of Al_2O_3 and any excess (Al_2O_3+B_2O_3) that is needed should be made up with B_2O_3 alone to increase the crack initiation load. For optimum ion exchange, the aluminoborosilicate glass should the total concentration of alkali metal oxide modifiers should equal that of alumina—i.e., (Li_2O+Na_2O+K_2O+Rb_2O+Cs_2O) $=Al_2O_3$— to achieve the greatest compressive stress and depth of layer, with excess B_2O_3 to improve damage resistance of the glass. However, excess B_2O_3 content should be balanced against the rate of ion exchange. For deep (e.g., >20 μm) ion exchange, the B_2O_3 concentration should, in some embodiments, be less than that of Al_2O_3. To achieve the lowest level of melting defects such as undissolved batch or gaseous inclusions, it is best to that $R_2O/Al_2O_3>1.0$ and, preferably, between $1.05\geq R_2O/Al_2O_3\geq1.2$. Since this condition would create NBOs, given by R_2O—Al_2O_3, enough B_2O_3 should, in some embodiments, be added to consume the excess modifiers (i.e., $B_2O_3>R_2O$—Al_2O_3) to maintain damage resistance. More preferably, $B_2O_3>2(R_2O$—$Al_2O_3)$.

Divalent cations can be added to lower the 200 P temperature (i.e., the typical melting viscosity) of the aluminoborosilicate glass and eliminate defects such as undissolved and/or unmelted batch materials. Smaller divalent cations, such as Mg^{2+}, Zn^{2+}, or the like are preferable, as they have beneficial impact on the compressive stress developed during ion exchange of the glass. Larger divalent cations such as Ca^{2+}, Sr^{2+}, and Ba^{2+} decrease the ion exchange rate and the compressive stress achieved by ion exchange. Likewise, the presence of smaller monovalent cations such as Li^+ in the glass can have a positive effect on the crack initiation threshold, whereas larger ions such as K^+ are not as desirable. In addition, whereas small amounts of K_2O can increase the depth of layer of the compressive stress region, high concentrations of larger monovalent ions such as K^+ decrease compressive stress and should therefore be limited to less than 4%.

The aluminoborosilicate glass described herein comprises at least 50 mol %, 58 mol % SiO_2 in some embodiments, and in other embodiments, at least 60 mol % SiO_2. The SiO_2 concentration plays a role in controlling the stability and viscosity of the glass. High SiO_2 concentrations raise the viscosity of the glass, making melting of the glass difficult. The high viscosity of high SiO_2-containing glasses frustrates mixing, dissolution of batch materials, and bubble rise during fining. High SiO_2 concentrations also require very high temperatures to maintain adequate flow and glass quality. Accordingly, the SiO_2 concentration in the glass should not exceed 72 mol %.

As the SiO_2 concentration in the glass decreases below 60 mol %, the liquidus temperature increases. The liquidus temperature of SiO_2—Al_2O_3—Na_2O compositions rapidly increases to temperatures exceeding 1500° C. at SiO_2 contents of less than 50 mol %. As the liquidus temperature increases, the liquidus viscosity (the viscosity of the molten glass at the liquidus temperature) of the glass decreases. While the presence of B_2O_3 suppresses the liquidus temperature, the SiO_2 content should be maintained at greater than 50 mol % to prevent the glass from having excessively high liquidus temperature and low liquidus viscosity. In order to keep the liquidus viscosity from becoming too low or too high, the SiO_2 concentration of the gasses described herein should therefore be within the range between 50 mol % and 72 mol %, between 58 mol % in some embodiments, and between 60 mol % and 72 mol % in other embodiments.

The SiO_2 concentration also provides the glass with chemical durability with respect to mineral acids, with the exception of hydrofluoric acid (HF). Accordingly, the SiO2 concentration in the glasses described herein should be greater than 50 mol % in order to provide sufficient durability.

TABLE 1

Compositions and properties of alkali aluminoborosilicate glasses.

Mol %	a	b	c	d	e	f
SiO_2	64	64	64	64	64	64
Al_2O_3	0	6	9	15	12	13.5
B_2O_3	18	12	9	3	9	9
Na_2O	18	18	18	18	15	13.5
SnO_2	0.1	0.1	0.1	0.1	0.1	0.1
$Al_2O_3 + B_2O_3 - Na_2O$	0	0	0	0	6	9
Strain Point (° C.)	537	527	524	570	532	548
Anneal Point (° C.)	575	565	564	619	577	605
Softening Point (° C.)	711	713	730	856	770	878

TABLE 1-continued

Compositions and properties of alkali aluminoborosilicate glasses.

Mol %	a	b	c	d	e	f
Coefficient of Thermal Expansion ($\times 10^{-7}$/° C.)	81.7	81.8	84.8	88.2	78	74.1
Density (g/cm$^{3)}$	2.493	2.461	2.454	2.437	2.394	2.353
Crack Initiation Load (gf)	100	200	200	300	700	1100
Vickers Hardness at 200 gf		511	519	513	489	475
Indentation Toughness (MPa m^0.5)		0.64	0.66	0.69	0.73	0.77
Brittleness (μm^0.5)		7.8	7.6	7.3	6.6	6
IX at 410° C. for 8 hrs in 100% KNO_3						
DOL (μm)	10.7	15.7	20.4	34.3	25.6	35.1
CS (MPa)	874	795	773	985	847	871

TABLE 2

Table 2. Compositions, expressed in mol %, and properties of alkali aluminoborosilicate glasses.

	Composition (mol %)											
Sample	SiO_2	Al_2O_3	B_2O_3	Li_2O	Na_2O	K_2O	MgO	CaO	P_2O_5	SnO_2	ZnO	ZrO_2
1	64.0	13.5	8.9		13.4	0.0	0.0	0.0		0.10		0.00
2	65.7	12.3	9.0		11.5	1.3	0.0	0.0		0.10		0.00
3	65.7	12.3	9.0		9.5	3.3	0.0	0.0		0.10		0.00
4	65.7	12.3	9.0		12.8	0.0	0.0	0.0		0.10		0.00
5	64.0	13.0	8.9		13.9	0.00	0.02	0.05		0.10		0.00
6	64.0	13.5	8.9		13.4	0.00	0.02	0.04		0.10		0.00
7	64.0	14.0	8.9		12.9	0.00	0.02	0.04		0.10		0.00
8	64.0	14.5	7.9		13.4	0.00	0.02	0.04		0.10		0.00
9	64.0	12.5	9.9		13.4	0.00	0.02	0.04		0.10		0.00
10	64.0	13.5	8.9		11.4	2.01	0.02	0.04		0.10		0.00
11	64.0	14.5	7.0		14.4	0.00	0.00	0.05		0.10		0.00
12	64.0	13.5	7.9		13.4	0.00	1.00	0.05		0.10		0.00
13	63.3	12.3	9.8		12.3	0.99	0.00	0.02		0.15		0.02
14	64.0	13.5	8.5		14.0	0.00				0.10		
15	64.0	12.5	10.0		13.0	0.50				0.10		
16	64.0	13.5	9.0		12.5	1.00				0.10		
17	64.0	13.5	9.0		13.5	0.00				0.10		
18	65.7	11.8	9.5		11.5	1.3	0.0	0.0		0.05		0.00
19	64.0	12.5	10.9		12.4	0.00	0.00	0.04		0.10		0.00
20	64.0	13.5	8.0		14.5	0.00				0.10		
21	64.0	13.5	8.9		13.4	0.0	0.0	0.0		0.10		0.00
22	63.9	13.0	5.0		11.0	3.0	4.0	0.0		0.10		0.00
23	65.7	11.8	10.0		11.0	1.30	0.02	0.04		0.05		0.00
24	65.7	11.3	10.0		11.5	1.3	0.0	0.0		0.05		0.00
25	65.7	10.7	10.6		11.5	1.30	0.02	0.05		0.05		0.00
26	64.0	13.5	6.0		13.4	0.00	3.02	0.06		0.10		0.00
27	64.0	13.5	7.0		15.5	0.00				0.10		
28	65.7	12.3	10.0		10.5	1.30	0.02	0.04		0.05		0.00
29	64.0	12.0	11.9		11.9	0.00	0.00	0.04		0.10		0.00
30	64.0	14.0	6.0		11.4	2.50	2.02	0.05		0.10		0.00
31	64.0	13.5	7.0		13.4	0.00	2.01	0.06		0.10		0.00
32	64.0	12.0	8.9		14.9	0.0	0.0	0.0		0.10		0.00
33	62.0	14.0	6.0		12.9	3.01	2.01	0.05		0.10		0.00
34	64.1	13.2	5.6		12.2	2.83	1.89	0.05		0.09		0.00
35	64.0	12.5	6.0		12.9	2.50	2.02	0.05		0.10		0.00
36	63.1	13.6	5.8		12.6	2.92	1.95	0.05		0.10		0.00
37	64.0	12.5	5.5		14.9	3.0	0.0	0.0		0.10		0.00
38	64.0	13.0	6.0		12.4	2.50	2.01	0.05		0.10		0.00
39	65.7	10.3	11.0		11.5	1.30	0.02	0.05		0.05		0.00
40	61.8	12.9	10.3	0.0	13.9	1.03	0.00	0.0	0.0	0.12	0.00	0.0
41	62.6	12.6	10.1	0.0	13.6	1.01	0.00	0.0	0.0	0.12	0.00	0.0
42	63.3	12.4	9.9	0.0	13.4	0.99	0.00	0.0	0.0	0.12	0.00	0.0
43	64.0	12.1	9.7	0.0	13.1	0.97	0.00	0.0	0.0	0.12	0.00	0.0
44	63.3	11.4	9.9	0.0	13.4	0.99	0.00	0.0	1.0	0.12	0.00	0.0
45	63.3	10.4	9.9	0.0	13.4	0.99	0.00	0.0	2.0	0.12	0.00	0.0
46	62.7	12.2	9.8	0	12.2	0.98	1.96	0.00	0	0.12	0.00	0
47	61.5	12.0	9.6	0	12.0	0.96	3.84	0.00	0	0.12	0.00	0
48	62.7	12.2	9.8	0	12.2	0.98	0.00	0.00	0	0.12	2.0	0
49	61.5	12.0	9.6	0	12.0	0.96	0.00	0.00	0	0.12	3.8	0
50	62.7	12.2	9.8	0	12.2	0.98	0.98	0.00	0	0.12	0.98	0
51	63.9	12.5	10.0	0	12.5	1.00	0.00	0.00	0	0.12	0.00	0
52	64.1	16.9	2.1		15.6	1.01	0.02	0.12		0.10		
53	64.0	16.4	2.1		16.3	1.01	0.02	0.13		0.10		

TABLE 2-continued

Table 2. Compositions, expressed in mol %, and properties of alkali aluminoborosilicate glasses.

54	59.9	16.5	6.6	16.2	0.5	0.0	0.1	0.1	0.0
55	50.5	20.2	9.8	19.4				0.1	
56	52.3	19.4	9.3	18.9				0.1	
57	55.2	20.3	9.7	14.6				0.1	

Sample	Total	$(R_2O + RO)/(Al_2O_3 + B_2O_3)$	R_2O/Al_2O_3	$(Al_2O_3 + B_2O_3)/(R_2O + RO)$	Density g/cm^3	Molar Volume cm^3/mol
1	100.0	0.602	0.997	1.661	2.353	28.44
2	100.0	0.606	1.046	1.651	2.347	28.47
3	100.0	0.606	1.046	1.651	2.345	28.77
4	100.0	0.605	1.045	1.652	2.346	28.31
5	100.0	0.639	1.074	1.564	2.363	28.23
6	100.0	0.602	0.997	1.661	2.355	28.41
7	100.0	0.567	0.926	1.764	2.335	28.74
8	100.0	0.602	0.929	1.661	2.363	28.45
9	100.0	0.602	1.076	1.662	2.354	28.29
10	100.0	0.602	0.998	1.660	2.356	28.67
11	100.0	0.676	0.997	1.480	2.376	28.27
12	100.0	0.676	0.997	1.479	2.369	28.12
13	99.00	0.601	1.077	1.665	2.346	28.41
14	100.1	0.636	1.037	1.571		
15	100.1	0.600	1.080	1.667		
16	100.1	0.600	1.000	1.667		
17	100.1	0.600	1.000	1.667		
18	100.0	0.606	1.090	1.652	2.346	28.4
19	100.0	0.533	0.996	1.877	2.353	28.34
20	100.1	0.674	1.074	1.483		
21	100.0	0.602	0.997	1.661	2.354	28.43
22	100.0	1.002	1.076	0.998	2.407	27.62
23	100.0	0.569	1.048	1.759	2.336	28.54
24	100.0	0.606	1.138	1.651	2.347	28.32
25	100.0	0.606	1.203	1.651	2.349	28.21
26	100.0	0.850	0.997	1.176	2.395	27.56
27	100.1	0.756	1.148	1.323		
28	100.0	0.533	0.964	1.875	2.331	28.68
29	100.0	0.502	0.997	1.994	2.326	28.62
30	100.0	0.804	0.998	1.244	2.392	28.11
31	100.0	0.758	0.996	1.319	2.385	27.81
32	100.0	0.717	1.246	1.395	2.394	27.7
33	100.0	0.903	1.141	1.108	2.418	27.89
34	100.0	0.903	1.141	1.108	2.409	27.82
35	100.0	0.949	1.237	1.053	2.414	27.61
36	100.0	0.903	1.141	1.108	2.411	27.88
37	100.0	1.002	1.438	0.998	2.444	27.5
38	100.0	0.897	1.151	1.115	2.406	27.78
39	100.0	0.606	1.249	1.651	2.431	27.21
40	100.0	0.644	1.160	1.552	2.358	
41	100.0	0.644	1.160	1.552	2.355	28.48
42	100.0	0.644	1.160	1.552	2.352	28.46
43	100.0	0.644	1.160	1.552	2.350	28.42
44	100.0	0.644	1.261	1.552	2.356	
45	100.0	0.644	1.381	1.552	2.358	
46	100.0	0.689	1.080	1.452	2.369	28.03
47	100.0	0.778	1.080	1.286	2.386	27.62
48	100.0	0.600	1.080	1.667	2.395	28.06
49	100.0	0.600	1.080	1.667	2.432	27.75
50	100.0	0.644	1.080	1.552	2.383	28.04
51	100.0	0.600	1.080	1.667	2.354	28.04
52	100.0	0.877	0.979	1.141	2.425	28.07
53	100.0	0.940	1.052	1.064	2.433	27.89
54	100.0	0.727	1.013	1.375	2.399	28.32
55	100.0	0.647	0.960	1.546	2.412	28.97
56	100.0	0.659	0.974	1.519	2.413	28.73
57	99.9	0.487	0.719	2.055	2.399	29.09

Sample	Strain pt. (° C.)	Anneal pt. (° C.)	Softening pt. (° C.)	CTE × 10^7 K^{-1}	Liquidus T (° C.)	Liquidus Viscosity (Mpoise)	200 poise T (° C.)	Elastic modulus (GPa)	Shear modulus (GPa)
1	548	605	878	74.1				62.3	25.6
2	543	603					1694		
3	524	580							
4	538	593					1690		
5	539	590	824	76.0	<750	>1786	1680	63.4	26.1
6	548	605	864	72.8	<750	>9706	1684	62.2	25.6
7	559	618	885	69.9	<750			62.7	25.7

TABLE 2-continued

Table 2. Compositions, expressed in mol %, and properties of alkali aluminoborosilicate glasses.

8	566	625	893	72.1				63.3	26.1
9	528	577	804	74.0	<730	>474	1650	62.9	25.7
10	534	590	864	78.4	<745			62.3	25.8
11	563	620	900	80.0	<715	>132346	1732	64.0	26.3
12	546	599	864	74.8	<715	>11212	1655	64.4	26.4
13	542	597		75.4			1669	61.6	25.4
14	547	600		75.7	<720				
15	523	574			<745				
16	539	595			<720				
17	569	628			<720				
18	518	570	820	72.8			1692	63.2	26.1
19	522	578	874	70.3	<705			60.6	24.8
20	545	596		78.2	<700				
21	546	604	871	72.0	<700	>100	1665	62.6	25.7
22	556	608	864	81.8	1115				
23	521	575	831	73.8				62.4	25.5
24	517	568	798	75.2			1702	64.1	26.3
25	513	561	777	73.2			1663	64.6	26.6
26	564	616	872	73.0	1050			67.6	27.8
27	547	594			<745				
28	528	587	883	68.9				61.8	25.3
29	509	563	826	69.9	<745	>663	1648	59.6	24.4
30	557	613	882	79.5	975	4.72	1689	67.4	27.6
31	550	603	862	75.4	945			66.2	27.2
32	532	577	770	78.0	865			67.4	27.8
33	538	587	830	87.7	<710		1614	68.8	28.3
34	540	591	839	82.1	<730	>885	1671	69.0	28.4
35	533	581	803	84.9	<710	>518	1634	69.0	28.5
36	538	588	830	85.7	<720	>1212	1663	68.4	28.1
37	522	564	754	91.2	<710			72.1	29.7
38	537	586	827	82.1	<720	>1698	1653	68.1	28.2
39	521	561	739	83.7	820	1.26	1480	72.5	29.9
40	517	567	805	79.4	<720			62.7	
41	518	569	811	75.4	<710	1662	1668	62.7	
42	520	572	831	74.0	<745			62.6	
43	519	571	824	76.4	<700	2053	1679	62.2	
44	508	556	785	76.0	<710			63.6	
45	500	547	785	75.7	<745			63.5	
46	524	573	809	74.5	<750				
47	526	573	791	74.8					
48	507	557	796	74.7	<700				
49	507	554	781	74.0	955				
50	513	562	795	75.4	<730				
51	489	539	791		<710				
52	666	726	1016	88.8	<930	>500	1743		
53	620	679	969	89.3	1010	8.2	1727		
54	588	643	905	87.4	1050	0.86	1628		
55	559.0	609.0	849.5	74.4					
56	559.0	610.0	841.0	92.4					
57	577.0	631.0	877.7	68.9					

Sample	Poisson ratio	Pre-IX Crack initiation load (gf)	CS[1] IX 8 hrs (MPa)	DOL[1] IX 8 hrs (μm)	CS[2] IX 15 hrs (MPa)	DOL[2], IX 15 hrs (μm)	Damage Threshold (gf)[3]
1	0.219	1100	871	35.1			>30000
2		600					>30000
3		600					29000
4		800					>30000
5	0.213	500-1000	803	38.8	762	51.5	
6	0.215	500-1000	816	38.8	782	51.8	
7	0.219	500-1000	803	36.1	761	50.5	
8	0.213	500-1000	868	40.3	840	53.6	
9	0.223		752	34.8	707	47.2	
10	0.209		722	47.8	687	65.1	
11	0.216		924	46	877	60.9	
12	0.219		839	36.2	790	48.8	
13	0.214		775	43.5	732	60.8	
14			850	38.5	792	50.7	
15			738	33.7	686	47.2	
16			763	40.7	716	55.5	
17			808	40.5	757	55.4	
18	0.212						25000
19	0.224		691	33.7	641	46.6	
20			868	37.1	810	52.1	
21	0.217		824	35.8			
22			771	50.6	747	66	
23	0.222						21000

TABLE 2-continued

Table 2. Compositions, expressed in mol %, and properties of alkali aluminoborosilicate glasses.

24	0.218						20000
25	0.216						20000
26	0.217		887	34.8	864	46.7	
27			887	34.7	835	48	
28	0.221						18000
29	0.219		623	31.3	557	43	
30	0.219	500-1000	791	54.1	772	67.5	
31	0.217		870	35.2	833	46.9	
32	0.21	600	847	25.6			
33	0.216	500-1000	814	50.8	773	67	
34	0.217	300-500	825	46.3	792	63.6	
35	0.21	300-500	794	45.5	750	60.6	
36	0.217	300-500	801	51.2	779	66.2	
37	0.215	200-300	747	43.9	698	56.5	
38	0.208	200-300	803	46.4	761	63.3	
39	0.213						5000
40			694	38.1	668	54.2	
41			707	40.1	654	50.6	
42			690	39.9	643	52.6	
43			689	38.6	627	55	
44			611	37.5	555	51.2	
45			533	37.4	502	50.4	
46			806	40.1	705	71.7	
47			753	27	716	36.3	
48			712	29.3	670	37.2	
49			720	25	688	34.8	
50			716	30.4	680	39.5	
51			574	32.5	540	43.1	
52							
53							
54			1029	51.2			
55			901	38.3	858	57.5	10000-15000
56			967	37.8	964	50.7	10000-15000
57			832	18.3	790	29	10000-15000

Sample	Damage Threshold (gf)[4]	Damage Threshold (gf)[5]	Damage Threshold (gf)
1			30
2			30
3			29
4			30
5	>30000		30
6	>30000		30
7	>30000		30
8	>30000		30
9	>30000		30
10	>30000		30
11	>30000		30
12	>30000		30
13	>30000		30
14	>30000		30
15	>30000		30
16	>30000		30
17	>30000		30
18			25
19	25000		25
20	25000		25
21		23000	23
22	20000-25000		22
23			21
24			20
25			20
26	20000		20
27	<25000		20
28			18
29	18000		18
30	15000		15
31	13000		13
32		11000	11
33	10000		10
34	9000		9
35	8000		8
36	8000		8
37	6000		6
38	6000		6
39			5
40	19000		19
41	22000		22

TABLE 2-continued

Table 2. Compositions, expressed in mol %, and properties of alkali aluminoborosilicate glasses.

42	>30000	30
43		
44	20000-25000	22.5
45		
46	15000-20000	17.5
47	>30000	>30
48	>30000	>30
49	>30000	>30
50	>30000	>30
51	20000-25000	22.5
52		13.5
53		11.5
54	10000-15000	12.5
55	10000-15000	12.5
56	<10000	12.5
57	10000-15000	12.5

[1]Compressive stress (CS) and depth of layer (DOL) after ion exchange (IX) in 100% KNO_3 at 410° C. for 8 hrs.
[3]Compressive stress (CS) and depth of layer (DOL) after ion exchange (IX) in 100% KNO_3 at 410° C. for 15 hrs.
[3]After ion exchange (IX) in 100% KNO_3 at 410° C. for 8 hrs.
[4]After ion exchange (IX) in 100% KNO_3 at 410° C. for 15 hrs.
[5]After ion exchange (IX) in 100% KNO_3 at 370° C. for 64 hrs.

Example

The following example illustrates features and advantages of the glasses described herein, and is in no way intended to limit the disclosure or appended claims thereto.

The purpose of this example was to verify that pre-ion exchange crack resistance improves post-ion exchange crack resistance in a glass. Samples of crack resistant aluminoborosilicate glass having composition e in Table 1 (64 mol % SiO_2, 13.5 mol % Al_2O_3, 9 mol % B_2O_3, 13.5 mol % Na_2O, 0.1 mol % SnO_2) and a pre-ion exchange crack initiation threshold of 1100 gram force (gf), were ion exchanged by immersion in a molten KNO_3 salt bath at 410° C. for 8 hrs to achieve depths of layer DOL and compressive stresses CS. One sample had a DOL of 55.8 μm and a CS of 838 MPa, and another sample had a DOL of 35.1 μm and a CS of 871 MPa.

For purposes of comparison, samples of Corning GORILLA™ Glass (an alkali aluminosilicate glass having the composition: 66.4 mol % SiO_2; 10.3 mol % Al_2O_3; 0.60 mol % B_2O_3; 4.0 mol % Na_2O; 2.10 mol % K_2O; 5.76 mol % MgO; 0.58 mol % CaO; 0.01 mol % ZrO_2; 0.21 mol % SnO_2; and 0.007 mol % Fe_2O_3) with a pre-ion exchange crack initiation threshold of 300 gf were then ion exchanged to closely match the compressive stress and depths of layer of the samples having composition f, listed in Table 1. One sample had a DOL of 54 μm and a CS of 751 MPa, and another sample had a DOL of 35 μm and a CS of 790 MPa. Compressive stresses and depths of layer of the ion exchanged samples of composition f and GORILLA Glass are listed in Table 3.

Following ion exchange, Vickers crack initiation loads were measured for each of composition f in Table 1 and the GORILLA Glass samples. Post-ion exchange crack initiation loads were measured using a Vickers diamond indenter as previously described herein and are listed in Table 3. The results of the crack initiation testing listed in Table 3 demonstrate that greater pre-ion exchange crack resistance improves post-ion exchange crack resistance. The GORILLA Glass 55 samples required loads of 5,000-7,000 gf to initiate median/radial crack systems, whereas the composition f samples required loads of greater than 30,000 gf, or 4-6 times the load needed to initiate such cracks in GORILLA Glass samples, to initiate median/radial crack systems. The GORILLA Glass samples fractured into several pieces when the indentation load exceeded the measured crack initiation loads, and in all cases fracture was observed by the point at which the load exceeded 10,000 gf. In contrast, the composition f samples did not fracture at any of the indentation loads (3,000 up to 30,000 gf) studied.

TABLE 3

Crack initiation loads of ion-exchanged glasses having composition f (listed in Table 1) and Gorilla ® Glasses.

Glass	Pre-Ion-Exchange Crack Initiation Load (gf)	DOL (microns)	Compressive Stress (MPa)	Post-Ion-Exchange Crack Initiation Load (gf)
Comp. f	1100	55.8	838	30000+
Gorilla Glass	300	54	751	7000
Comp. f	1100	35.1	871	30000+
Gorilla Glass	300	35	790	5000

While typical embodiments have been set forth for the purpose of illustration, the foregoing description should not be deemed to be a limitation on the scope of the disclosure or appended claims. Accordingly, various modifications, adaptations, and alternatives may occur to one skilled in the art without departing from the spirit and scope of the present disclosure or appended claims.

The invention claimed is:

[1. A glass comprising:
at least 58 mol % SiO_2;
at least 8 mol % Na_2O;
5.5-12 mol % B_2O_3; and
Al_2O_3;
wherein a ratio

$$\frac{Al_2O_3(\text{mol }\%) + B_2O_3(\text{mol }\%)}{\sum \text{modifiers}(\text{mol }\%)} > 1,$$

the modifiers are one or more alkali metal oxide (R_2O) and one or more alkaline earth oxide (RO);

wherein Al_2O_3 (mol %)>B_2O_3 (mol %) and $0.9<R_2O/Al_2O_3<1.3$, wherein the glass is substantially free of Li_2O.]

[2. The glass of claim 1, wherein the glass is ion exchanged and has a layer under a compressive stress of at least about 600 MPa, the layer extending from a surface of the glass into the glass to a depth of layer of at least about 30 μm.]

[3. The glass of claim 2, wherein the compressive stress is at least about 800 MPa.]

[4. The glass of claim 2, wherein the glass has a Vickers crack initiation threshold of at least about 30 kgf.]

[5. The glass of claim 1, wherein the glass is defined by the equation

$$\frac{Al_2O_3(\text{mol }\%)+B_2O_3(\text{mol }\%)}{\sum \text{modifiers}(\text{mol }\%)} \geq 1.45.$$

]

[6. The glass of claim 1, wherein the glass comprises from about 60 to 72 mol % SiO_2, about 9 mol % to about 17 mol % Al_2O_3, and about 8 mol % to about 20 mol % Na_2O.]

[7. The glass of claim 1, wherein the glass comprises at least one of MgO, ZnO, CaO, SrO, and BaO.]

[8. The glass of claim 1, wherein the glass comprises 5.5-10 mol % B_2O_3.]

[9. The glass of claim 1, wherein the glass comprises from 0 mol % to about 4 mol % K_2O.]

[10. The glass of claim 1, wherein the glass is defined by the following equation -5.7 mol %<Σ modifiers−Al_2O_3<2.99 mol %.]

[11. The glass of claim 1, wherein the glass is defined by the following equation $1.0<R_2O/Al_2O_3<1.3$.]

[12. The glass of claim 1, wherein the glass has a Young's modulus of less than about 69 GPa.]

[13. A glass comprising:
at least 58 mol % SiO_2;
at least 8 mol % Na_2O;
2-12 mol % B_2O_3; and
Al_2O_3;
wherein a ratio

$$\frac{Al_2O_3(\text{mol }\%)+B_2O_3(\text{mol }\%)}{\sum \text{modifiers}(\text{mol }\%)} > 1,$$

the modifiers are one or more alkali metal oxide (R_2O) and one or more alkaline earth oxide (RO);
wherein $0.9<R_2O/Al_2O3<1.3$, Al_2O_3 (mol %)>B_2O_3 (mol %), and wherein the glass is defined by the following equation -5.7 mol %<Σ modifiers−Al_2O_3<2.17 mol %.]

[14. The glass of claim 13, wherein the glass is defined by the equation

$$\frac{Al_2O_3(\text{mol }\%)+B_2O_3(\text{mol }\%)}{\sum \text{modifiers}(\text{mol }\%)} \geq 1.45.$$

]

[15. The glass of claim 13, wherein the glass comprises from about 60 to 72 mol % SiO_2, about 9 mol % to about 17 mol % Al_2O_3, and about 8 mol % to about 20 mol % Na_2O.]

[16. The glass of claim 13, wherein the glass comprises at least one of MgO, ZnO, CaO, SrO, and BaO.]

[17. The glass of claim 13, wherein the glass comprises 3-10 mol % B_2O_3.]

[18. The glass of claim 13, wherein the glass is defined by the following equation $1.0<R_2O/Al_2O_3<1.3$.]

[19. The glass of claim 13, wherein the glass has a Young's modulus of less than about 69 GPa.]

[20. A glass comprising:
at least 58 mol % SiO_2;
at least 8 mol % Na_2O;
2-10 mol % B_2O_3;
Al_2O_3; and
wherein a ratio

$$\frac{Al_2O_3(\text{mol }\%)+B_2O_3(\text{mol }\%)}{\sum \text{modifiers}(\text{mol }\%)} > 1,$$

the modifiers are one or more alkali metal oxide (R_2O) and one or more alkaline earth oxide (RO);
wherein $0.9<R_2O/Al_2O_3<1.3$, and wherein the glass is defined by the following equation -5.7 mol %<Σ modifiers−Al_2O_3<2.17 mol %.]

[21. The glass of claim 20, wherein the glass is defined by the equation

$$\frac{Al_2O_3(\text{mol }\%)+B_2O_3(\text{mol }\%)}{\sum \text{modifiers}(\text{mol }\%)} \geq 1.45.$$

]

[22. The glass of claim 20, wherein the glass comprises from about 60 to 72 mol % SiO_2, about 9 mol % to about 17 mol % Al_2O_3, and about 8 mol % to about 20 mol % Na_2O.]

[23. The glass of claim 20, wherein the glass comprises at least one of MgO, ZnO, CaO, SrO, and BaO.]

[24. The glass of claim 20, wherein the glass comprises 3-10 mol % B_2O_3.]

[25. The glass of claim 20, wherein the glass is defined by the following equation $1.0<R_2O/Al_2O_3<1.3$.]

26. An aluminoborosilicate glass comprising:
at least 58 mol % SiO_2;
9-17 mol % Al_2O_3;
2-12 mol % B_2O_3;
8-16 mol % Na_2O;
>0-2 mol % SnO_2; and
0 mol % P_2O_5,
wherein

$$\frac{Al_2O_3(\text{mol }\%)+B_2O_3(\text{mol }\%)}{\Sigma \text{modifiers }(\text{mol }\%)} > 1,$$

wherein the modifiers are one or more alkali metal oxide (R_2O) and one or more alkaline earth metal oxide (RO),
wherein Al_2O_3 (mol %)>B_2O_3 (mol %),
wherein $1<R_2O$ (mol %)/Al_2O_3 (mol %)<1.3,
wherein the glass has a Vickers crack initiation threshold of greater than 500 gf, and
wherein the glass is substantially free of lithium.

27. The glass of claim 26, wherein the glass comprises from 60 to 72 mol % SiO_2.

28. The glass of claim 26, wherein the glass is defined by the equation wherein B_2O_3 *(mol %)>(*R_2O *(mol %)–*Al_2O_3 *(mol %)).*

29. The glass of claim 26, wherein the glass is defined by the equation

$$1 < \frac{Al_2O_3(mol\ \%) + B_2O_3(mol\ \%)}{\Sigma modifiers\ (mol\ \%)} < 1.45.$$

30. The glass of claim 26, wherein the glass has a molar volume of at least 27 cm^3*/mol.*

31. The glass of claim 26, wherein the glass is free of at least one of arsenic, antimony, and barium.

32. The glass of claim 26, wherein the glass has a Vickers crack initiation threshold of at least 1000 gf.

33. The glass of claim 26, wherein the glass, when ion exchanged, has a Vickers crack initiation threshold of at least 30 kgf.

* * * * *