US00RE45541E

(19) **United States**
(12) **Reissued Patent**
Adelson

(10) **Patent Number: US RE45,541 E**
(45) **Date of Reissued Patent: Jun. 2, 2015**

(54) **TACTILE SENSOR USING ELASTOMERIC IMAGING**

(71) Applicant: **Massachusetts Institute of Technology**, Cambridge, MA (US)

(72) Inventor: **Edward Adelson**, Winchester, MA (US)

(73) Assignee: **MASSACHUSETTS INSTITUTE OF TECHNOLOGY**, Cambridge, MA (US)

(21) Appl. No.: **14/045,668**

(22) Filed: **Oct. 3, 2013**

Related U.S. Patent Documents

Reissue of:

(64) Patent No.: **8,411,140**
Issued: **Apr. 2, 2013**
Appl. No.: **12/488,008**
Filed: **Jun. 19, 2009**

U.S. Applications:

(63) Continuation of application No. 13/971,456, filed on Aug. 20, 2013, now Pat. No. Re. 44,856, which is an application for the reissue of Pat. No. 8,411,140.

(60) Provisional application No. 61/073,904, filed on Jun. 19, 2008.

(51) **Int. Cl.**
H04N 7/18 (2006.01)
G06F 3/042 (2006.01)
G06K 9/00 (2006.01)

(52) **U.S. Cl.**
CPC ***G06F 3/042*** (2013.01)

(58) **Field of Classification Search**
USPC 348/92, 135, 77; 382/124, 125, 126, 382/115, 127, 116; 396/15
See application file for complete search history.

(56) **References Cited**

U.S. PATENT DOCUMENTS

4,120,585 A 10/1978 DePalma et al.
4,340,300 A 7/1982 Ruell

(Continued)

FOREIGN PATENT DOCUMENTS

JP 2005121858 A 5/2005
JP 2007520040 A 7/2007

(Continued)

OTHER PUBLICATIONS

Maekawa et al., "Development of a Finger-Shaped Tactile Sensor and its Evaluation by Active Touch" Proceedings of the 1992 IEEE International Conference on Robotics and Automation, Nice, France, May 1992, pp. 1327-1334.

(Continued)

Primary Examiner — Behrooz Senfi
(74) *Attorney, Agent, or Firm* — Gesmer Updegrove LLP

(57) **ABSTRACT**

A tactile sensor includes a photosensing structure, a volume of elastomer capable of transmitting an image, and a reflective skin covering the volume of elastomer. The reflective skin is illuminated through the volume of elastomer by one or more light sources, and has particles that reflect light incident on the reflective skin from within the volume of elastomer. The reflective skin is geometrically altered in response to pressure applied by an entity touching the reflective skin, the geometrical alteration causing localized changes in the surface normal of the skin and associated localized changes in the amount of light reflected from the reflective skin in the direction of the photosensing structure. The photosensing structure receives a portion of the reflected light in the form of an image, the image indicating one or more features of the entity producing the pressure.

20 Claims, 10 Drawing Sheets

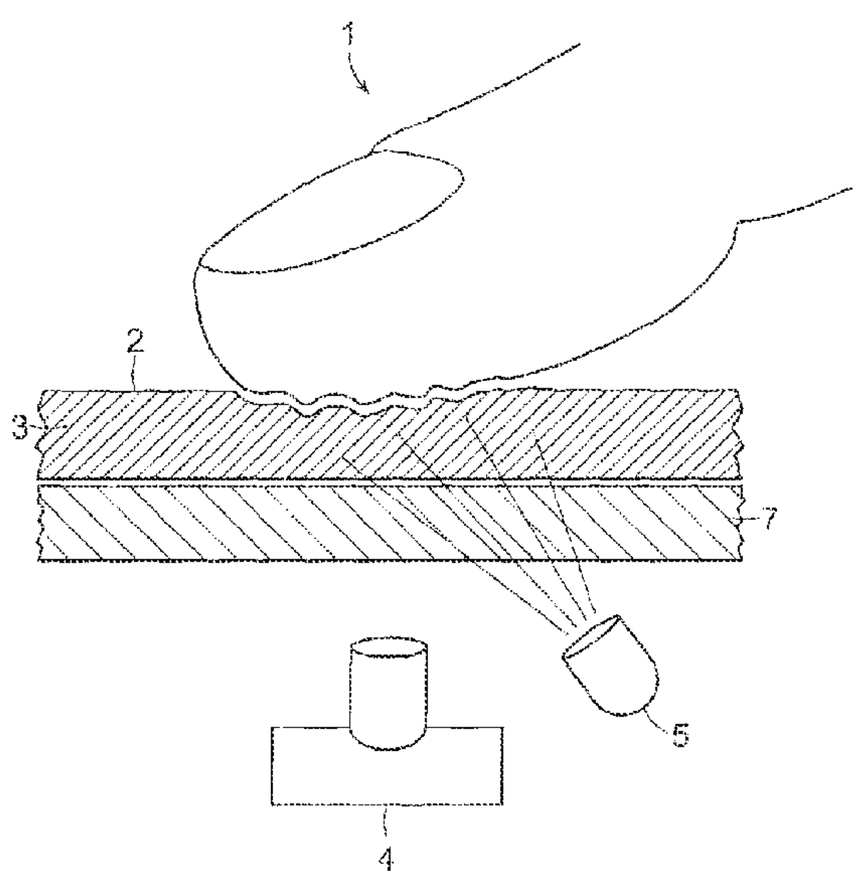

(56) **References Cited**

U.S. PATENT DOCUMENTS

4,481,815	A	11/1984	Overton	
4,549,093	A	10/1985	Severwright	
4,584,625	A	4/1986	Kellogg	
4,588,348	A	5/1986	Beni et al.	
4,775,961	A	10/1988	Capek et al.	
5,357,799	A	10/1994	Roth et al.	
5,448,649	A	9/1995	Chen et al.	
5,616,839	A	4/1997	Chen et al.	
5,737,071	A *	4/1998	Arndt	356/71
5,879,454	A *	3/1999	Peng	118/31.5
5,967,940	A	10/1999	Yamaguchi	
5,967,990	A	10/1999	Thierman et al.	
6,144,757	A *	11/2000	Fukuzumi	382/124
6,154,285	A *	11/2000	Teng et al.	356/445
6,234,031	B1 *	5/2001	Suga	73/862.474
6,909,084	B2	6/2005	Tachi et al.	
7,707,001	B2 *	4/2010	Obinata et al.	702/127
7,787,110	B2 *	8/2010	Raguin et al.	356/71
2003/0178556	A1	9/2003	Tachi et al.	
2004/0237669	A1 *	12/2004	Hayward et al.	73/862.624
2004/0252867	A1 *	12/2004	Lan et al.	382/124
2004/0255128	A1 *	12/2004	Ohba	713/186
2006/0119837	A1 *	6/2006	Raguin et al.	356/71
2007/0146536	A1	6/2007	Lemoine	
2007/0288186	A1	12/2007	Datta et al.	
2008/0106258	A1	5/2008	Torres-Jara	
2008/0219521	A1 *	9/2008	Benkley et al.	382/124
2008/0284925	A1 *	11/2008	Han	349/12
2010/0284565	A1 *	11/2010	Benkley et al.	382/103
2014/0104395	A1 *	4/2014	Rohaly et al.	348/47

FOREIGN PATENT DOCUMENTS

JP	2008008746 A	1/2008
WO	2005085766	9/2005
WO	2006098719	9/2006

OTHER PUBLICATIONS

Lee et al., "A Modular Expandable Tactile Sensor Using Flexible Polymer" 18th IEEE International Conference 2005, pp. 642-645.

Begej, "Planar and Finger-Shaped Optical Tactile Sensors for Robotic Applications" IEEE Journal of Robotics and Automation, vol. 4, No. 5, Oct. 1988, pp. 472-484.

Hritsu et al., "The performance of a deformable-membrane tactile sensor: basic results on geometrically-defined tasks" IEEE International Conference on Robotics and Automation 2000, pp. 508-513.

Heo et al., "Tactile Sensor arrays using fiber Bragg grating sensors" Sensors and Actuators A 126, 2006 pp. 312-327.

Maheshwari et al., "Tactile Sensors to Sense Touch on a Par with a Human Finger" Angewandte Chem. Int. Ed. 2008, 47, pp. 7808-7826.

Maheshwari et al., "High-Resolution Thin Film Device to Sense Texture by Touch" Science, vol. 312, Jun. 9, 2006, pp. 1501-1504.

Full et al., "Maximum single leg force production: Cockroaches Righting on Photoelastic Gelatin" The Journal of Experimental Biology 198, 1995, pp. 2441-2452.

O'Gorman et al., "Fingerprint Verification" Chapter 2, Biometrics:Personal Identification in Networked Society 1999, 1-22.

Graz et al., "Flexible ferroelectret field-effect transistor for large-area sensor skins and microphones" Applied Physics Letters, 89, 2006, pp. 073501-1-073501-3.

NODA, "300nm-Thick Cantilever in PDMS for Tactile Sensing" 2005 IEEE pp. 283-286.

English Translation of Japanese Notice of Rejection issued on Aug. 7, 2012 in connection with Japanese Patent Appln. No. 2011-514834, 2 pages.

International Search Report and Written Opinion issued on Jan. 21, 2010 in connection with International Application PCT/US2009/047930, 11 pages.

International Preliminary Report on Patentability issued on Jan. 6, 2011 in connection with International Application PCT/US2009/04930, 6 pages.

Kajimoto et al., "Active Tactile Sensor using Deformable Sheet Reflector" Technical Digest of the 16th Sensor Symposium 1998, pp. 99-104.

* cited by examiner

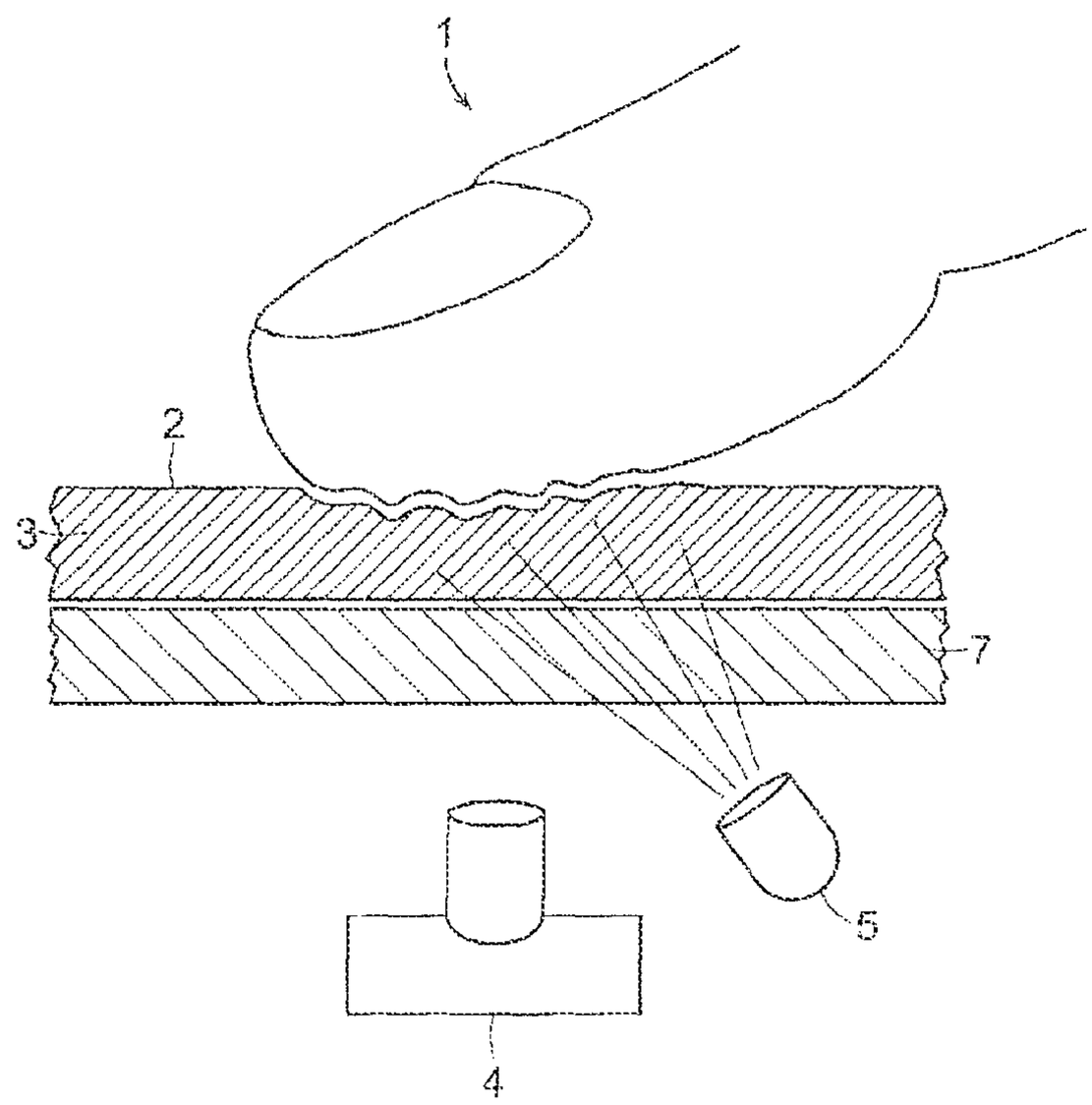

FIG. 1

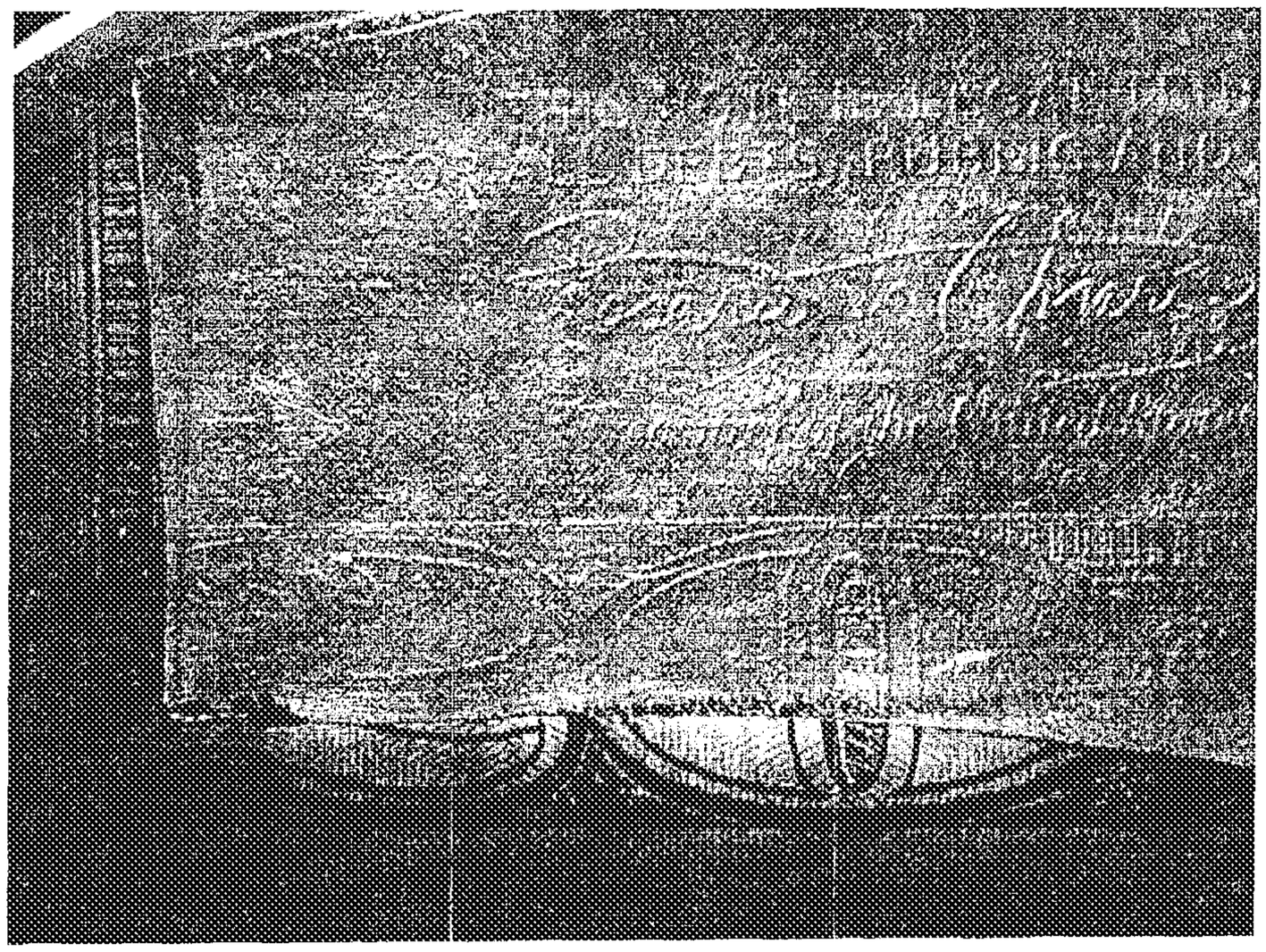

FIG. 2

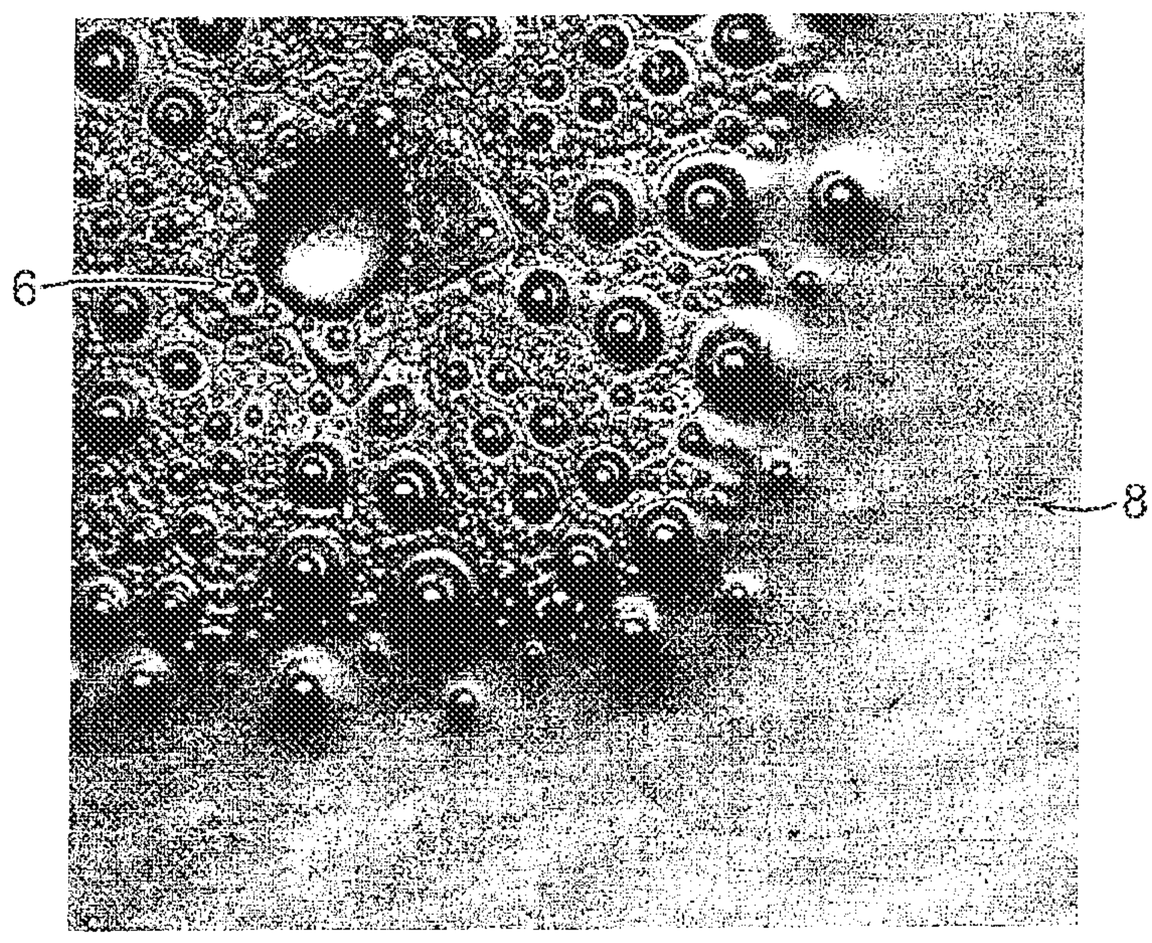

FIG. 3

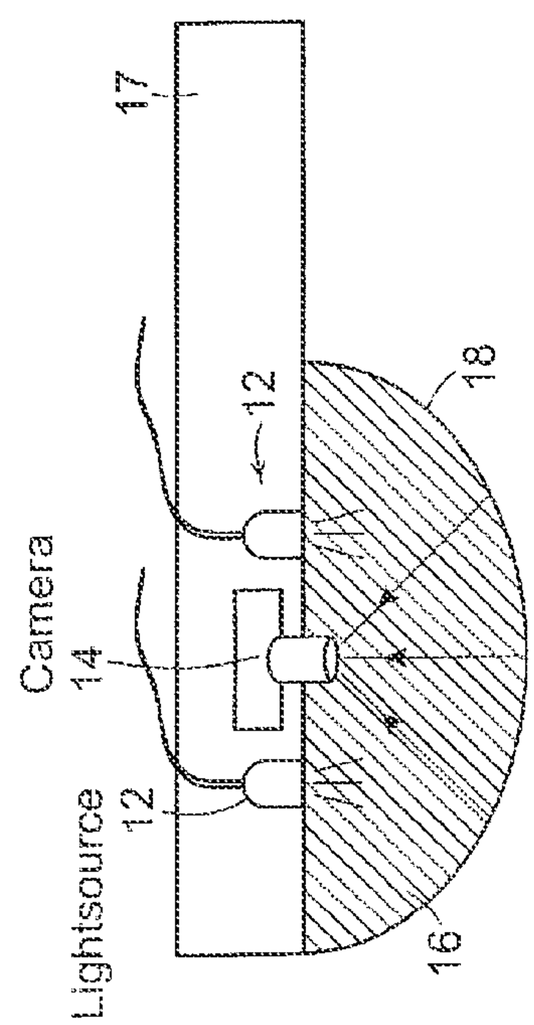

FIG. 4A

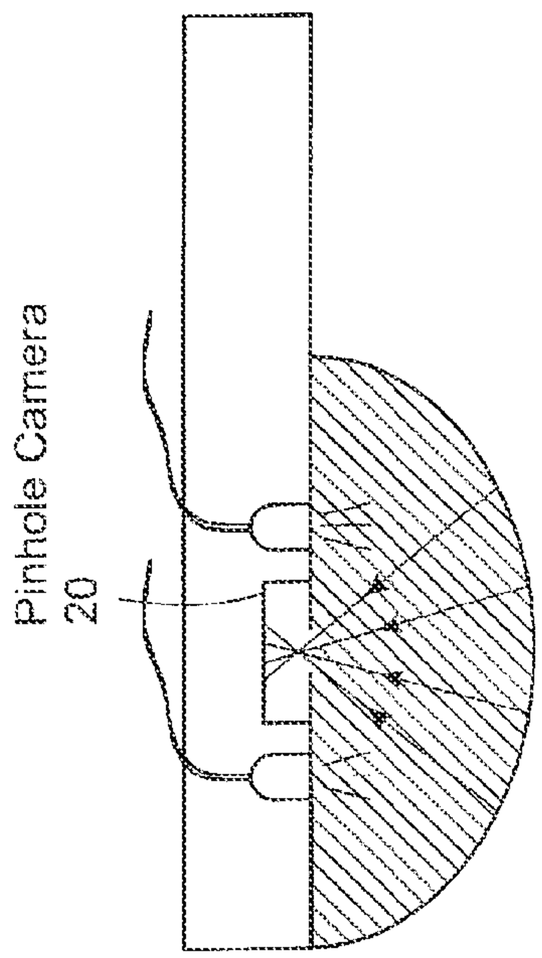

FIG. 4B

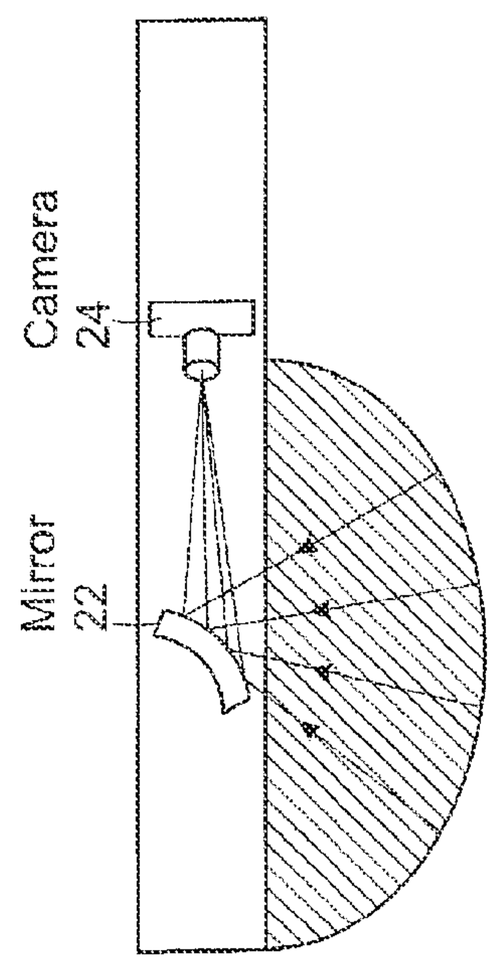

FIG. 4C

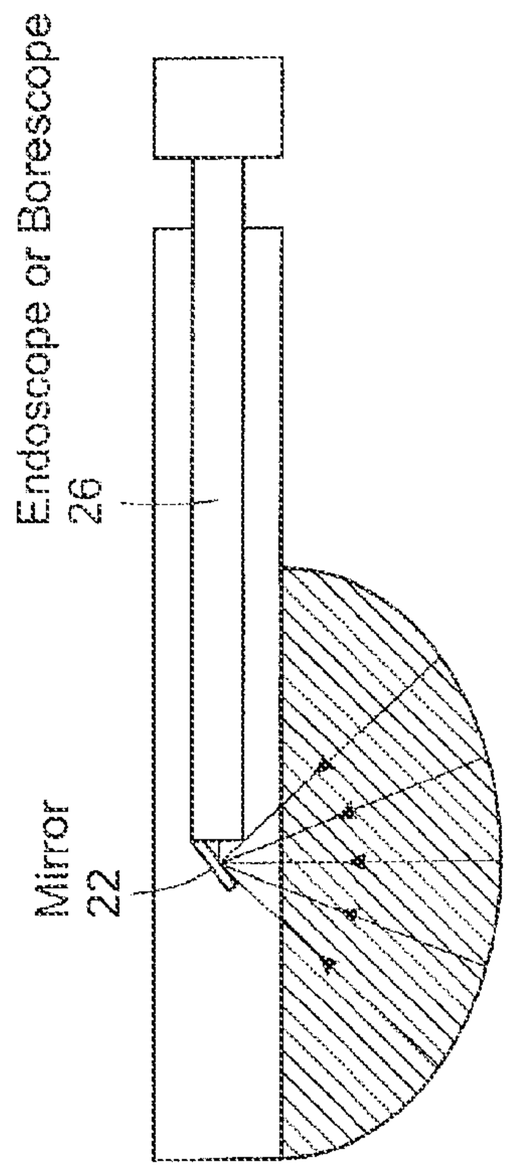

FIG. 4D

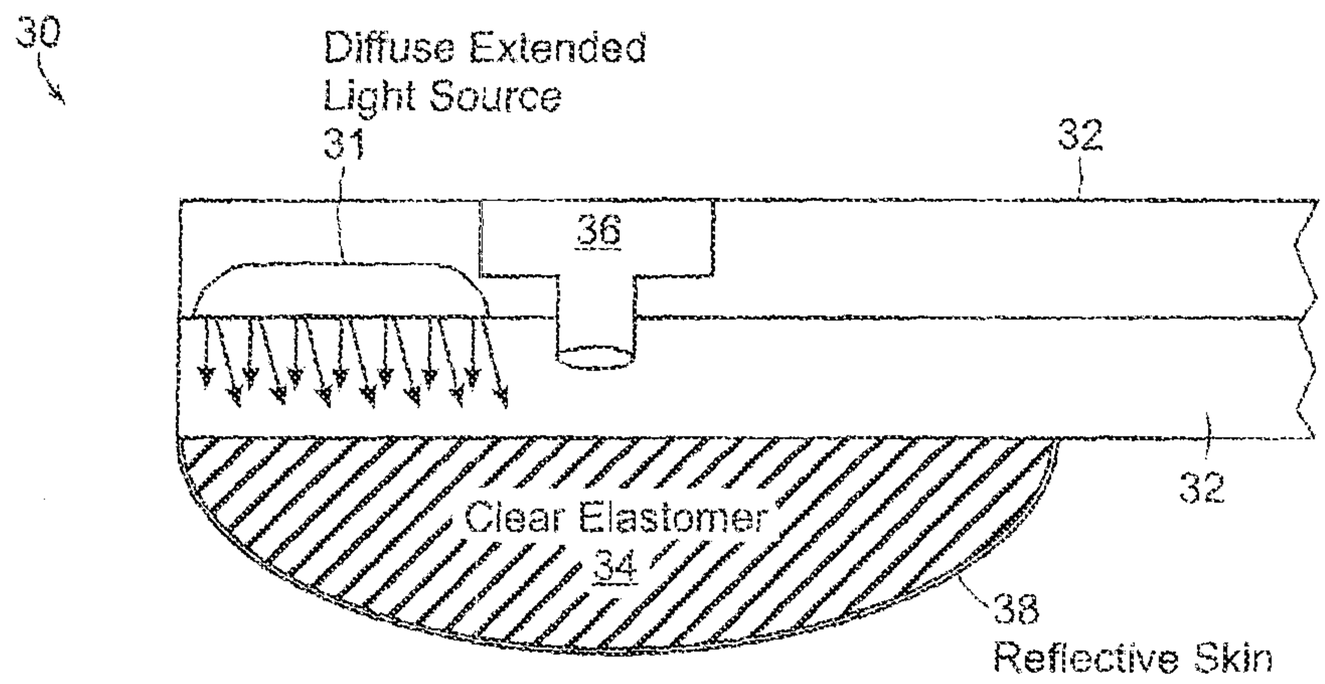
30
Diffuse Extended
Light Source
31
32
36
32
Clear Elastomer
34
38
Reflective Skin

FIG. 5A

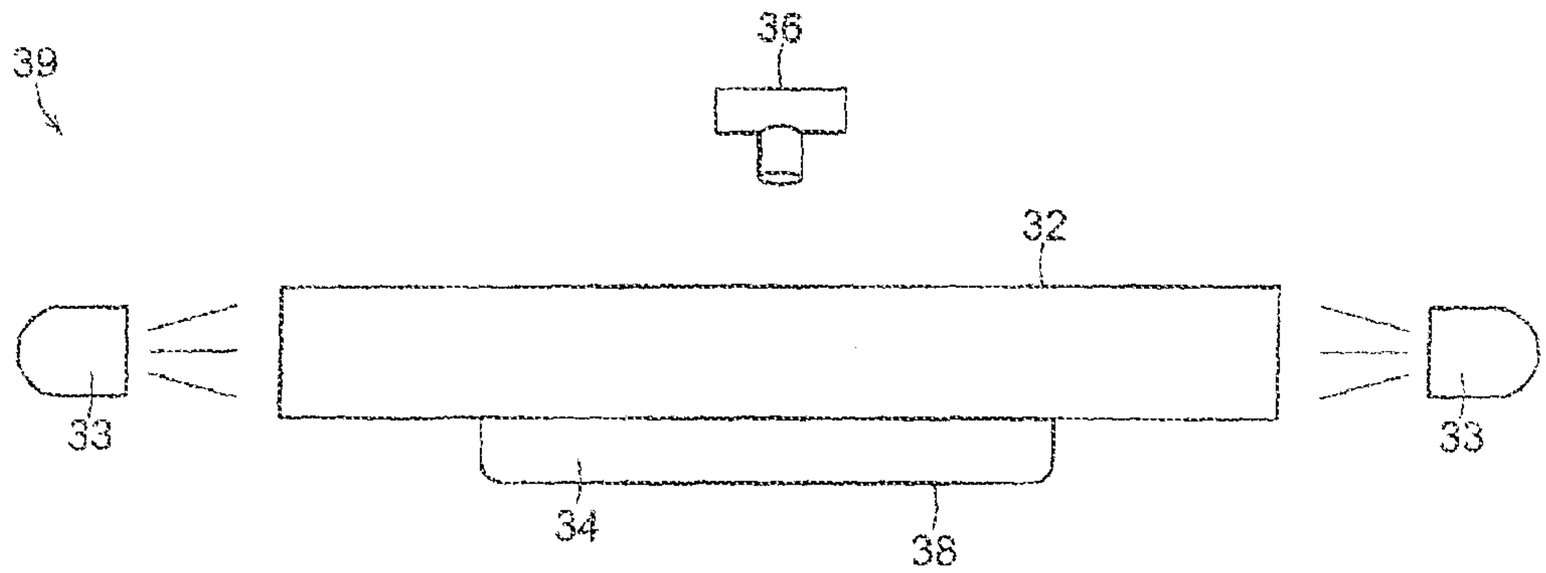
39
36
32
33
33
34
38

FIG. 5B

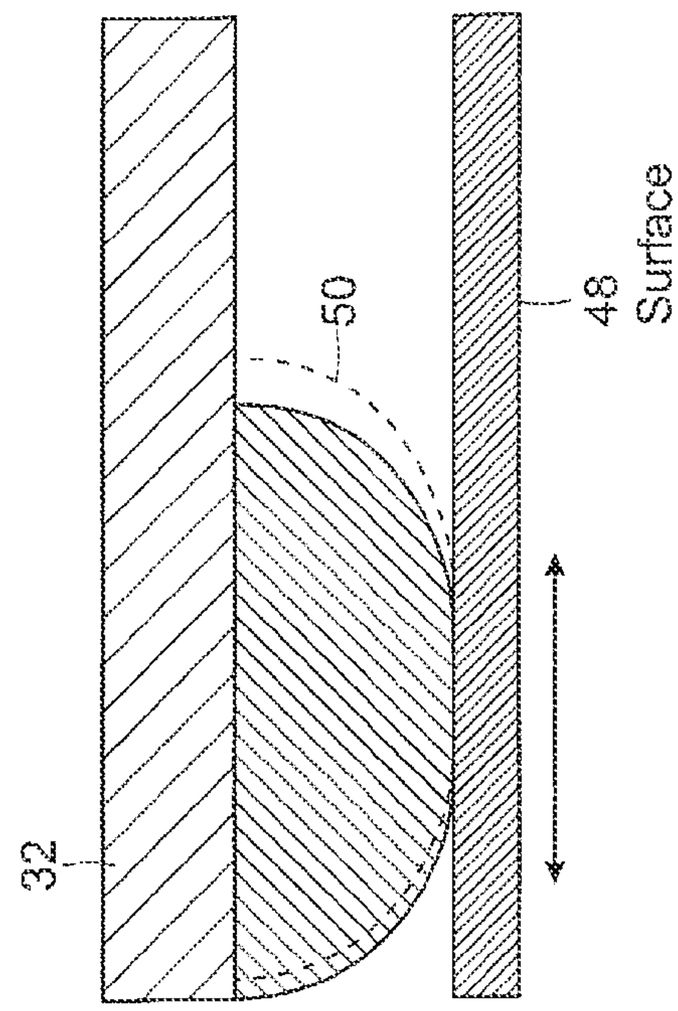

FIG. 6B

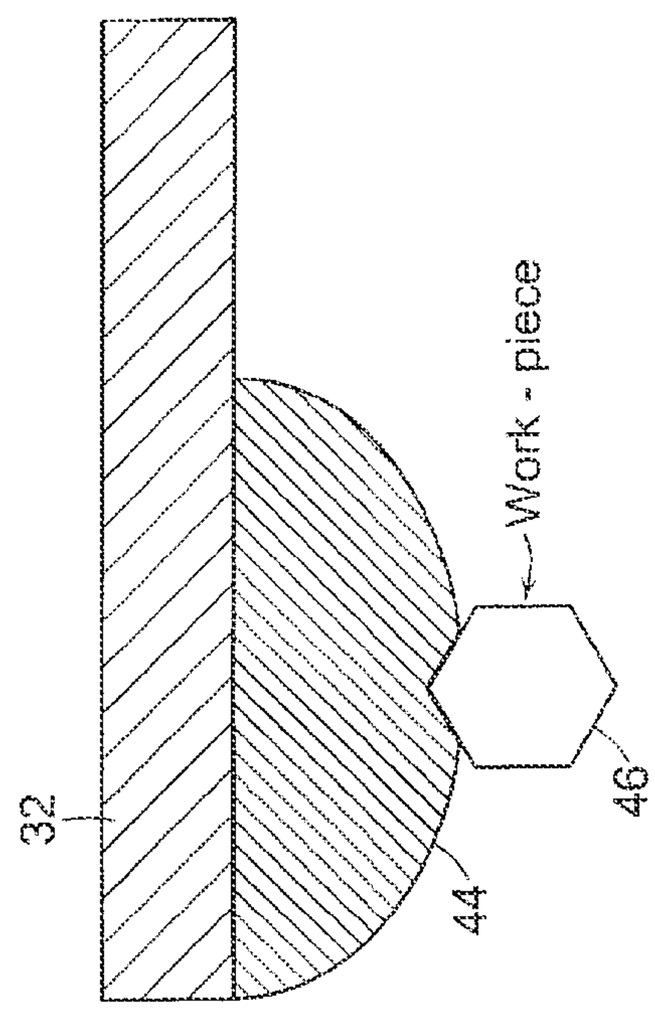

FIG. 6A

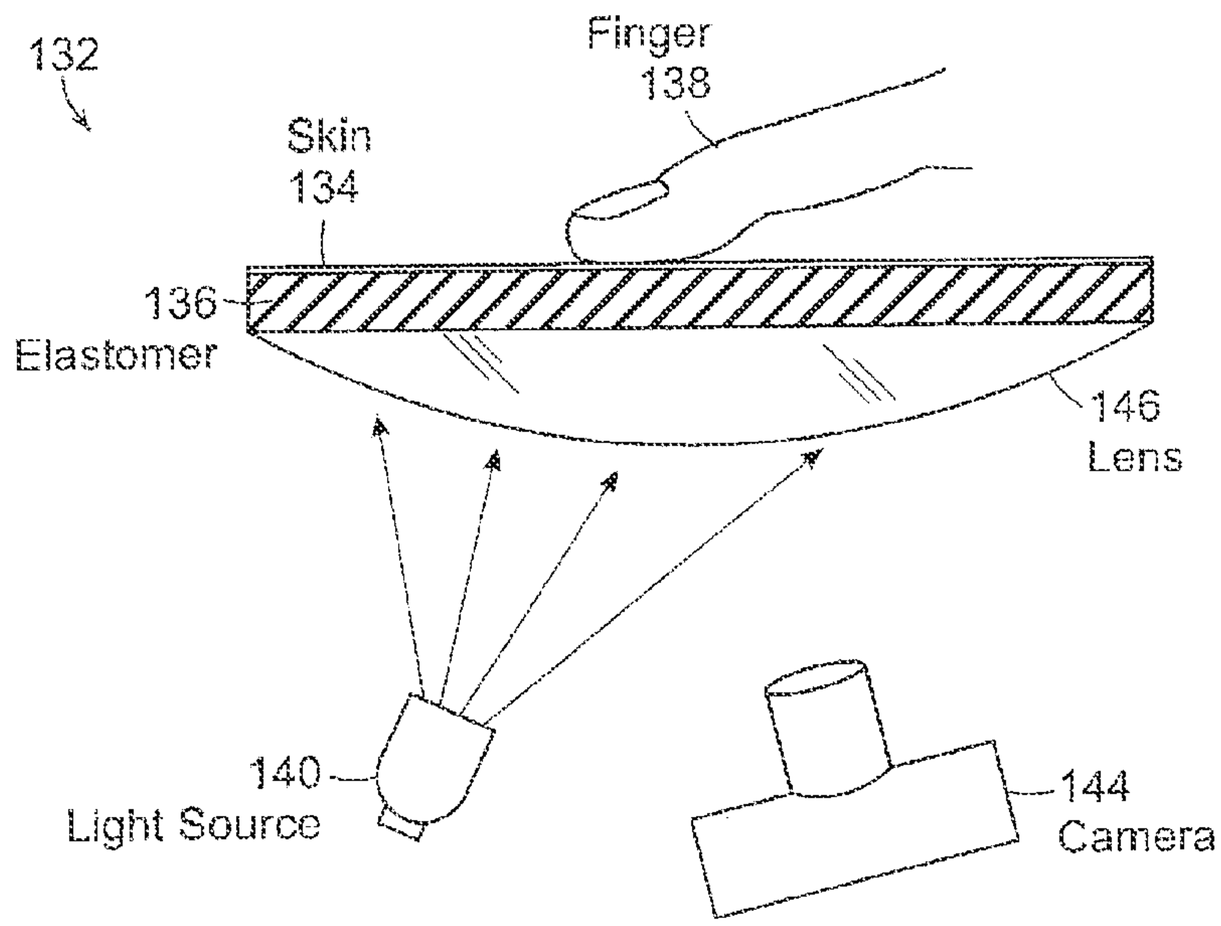
132
Finger
138
Skin
134
136
Elastomer
146
Lens
140
Light Source
144
Camera

FIG. 7A

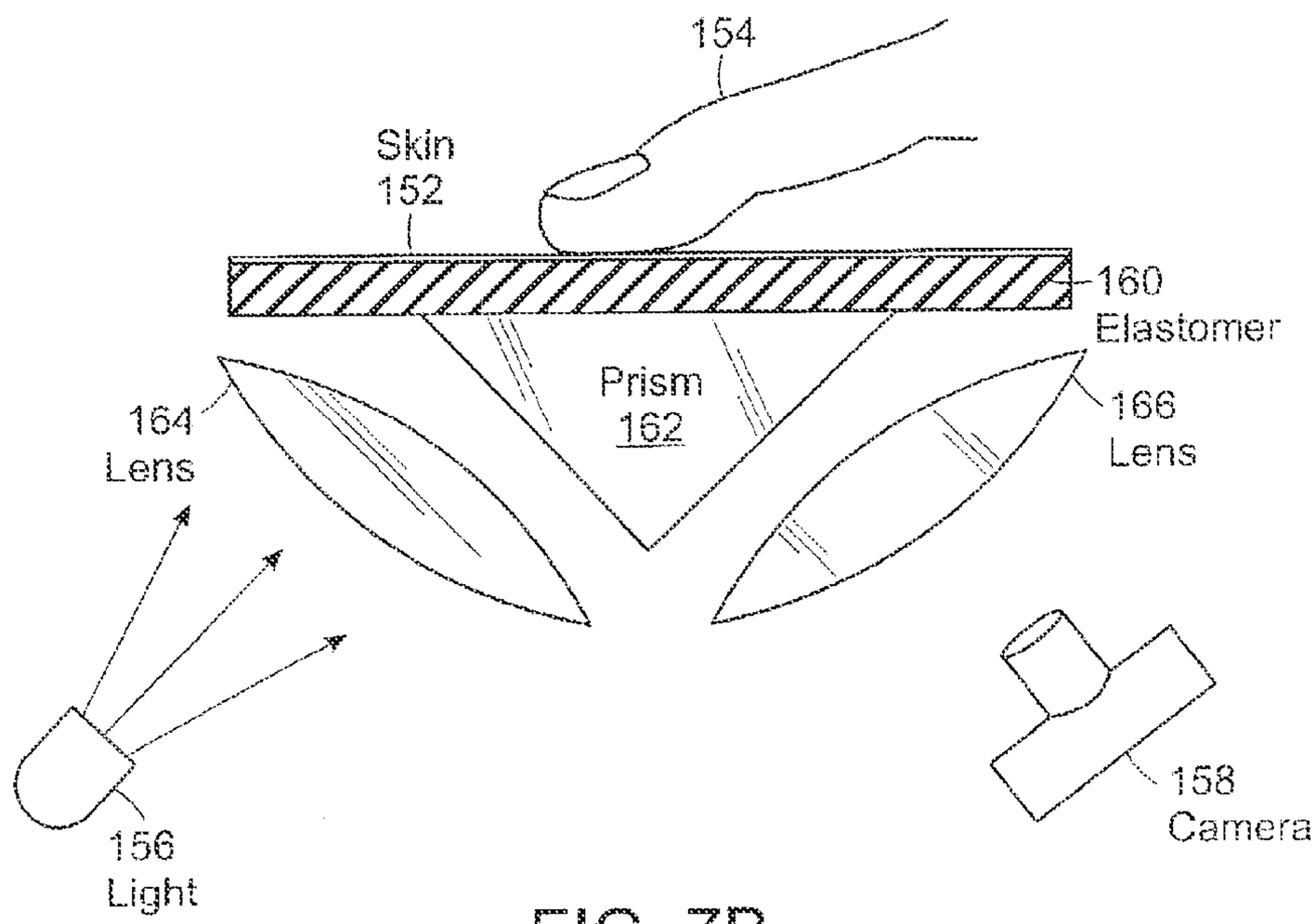
154
Skin
152
160
Elastomer
Prism
162
164
Lens
166
Lens
156
Light
158
Camera

FIG. 7B

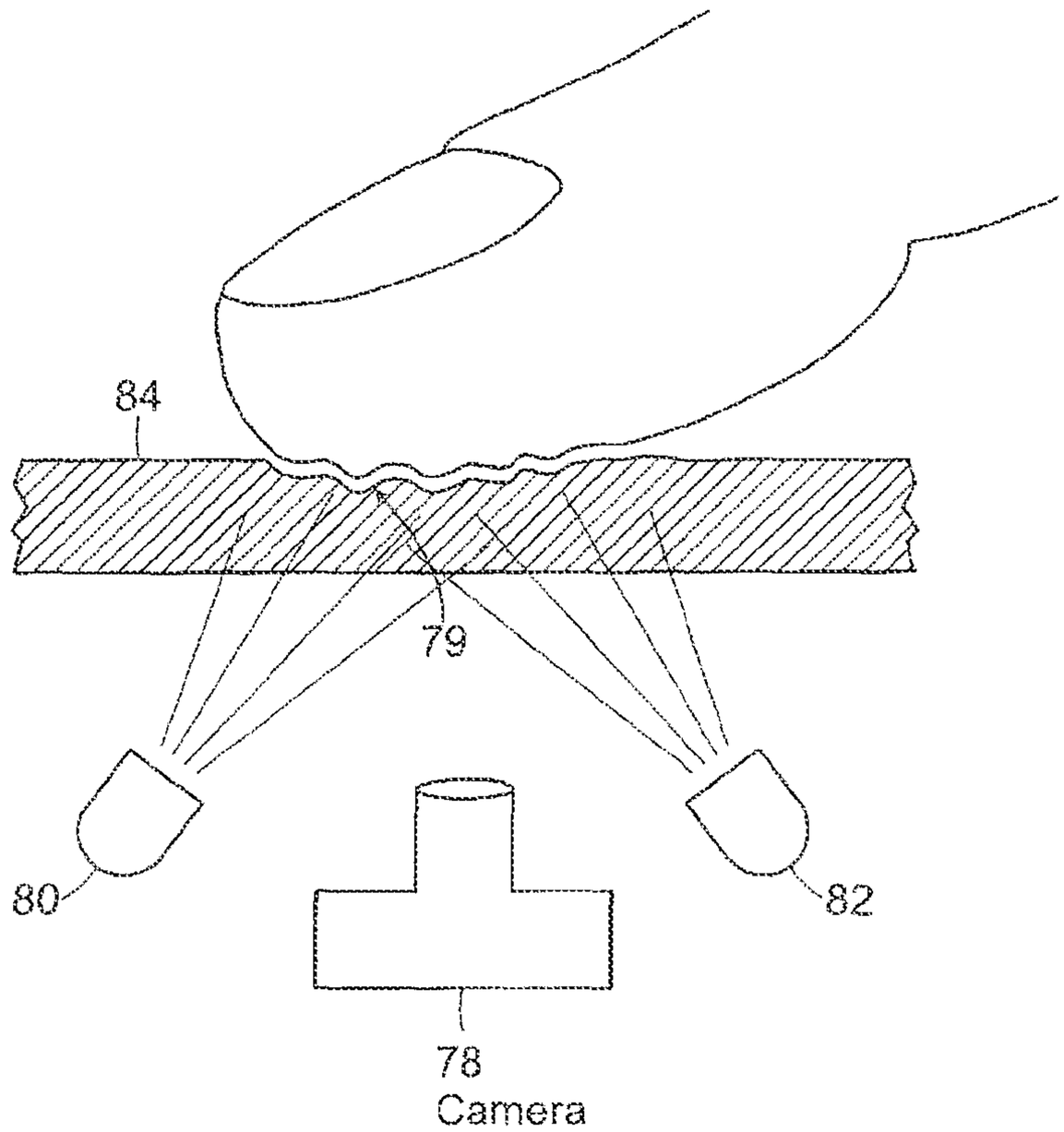
84
79
80
82
78
Camera

FIG. 8

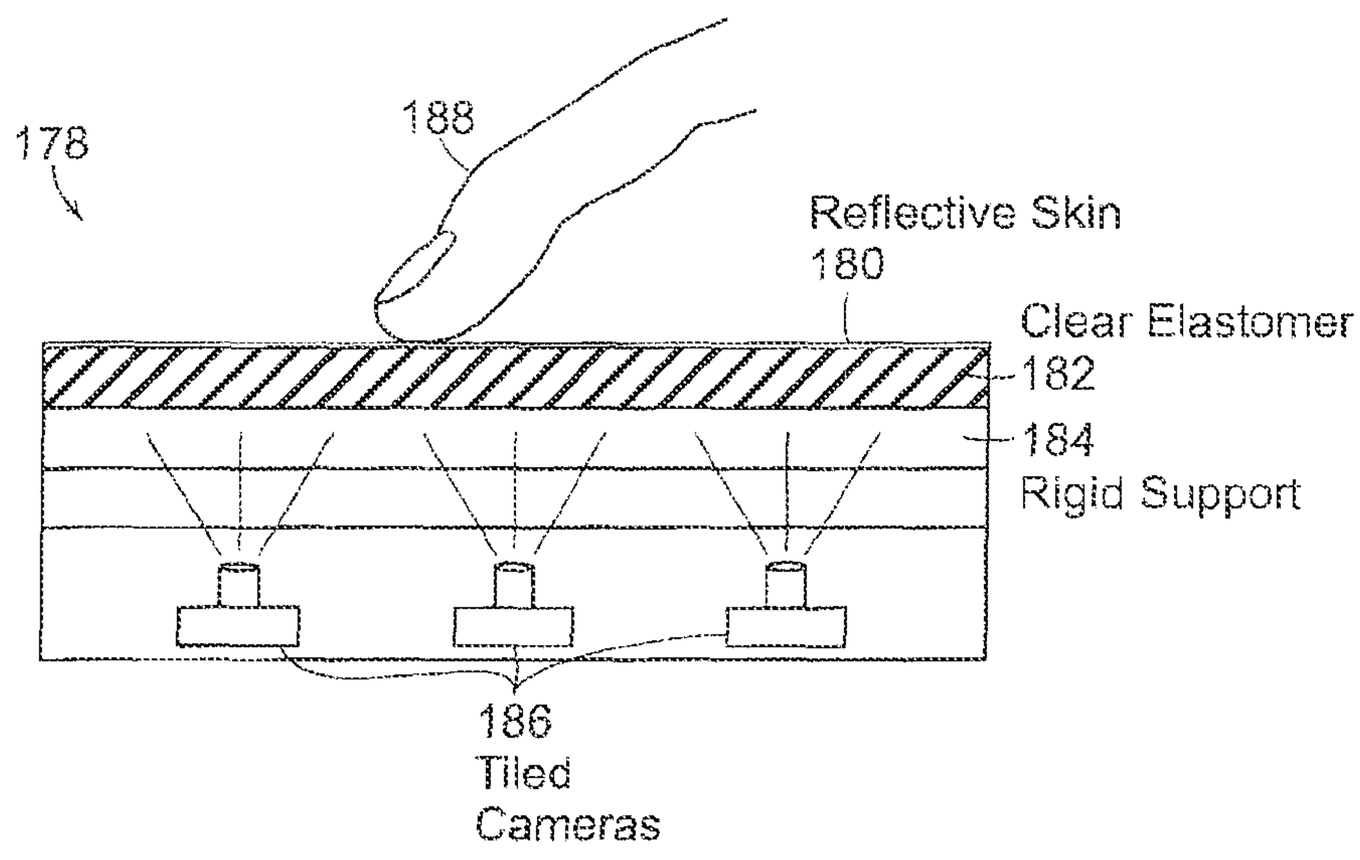
178
188
Reflective Skin
180
Clear Elastomer
182
184
Rigid Support
186
Tiled
Cameras

FIG. 9

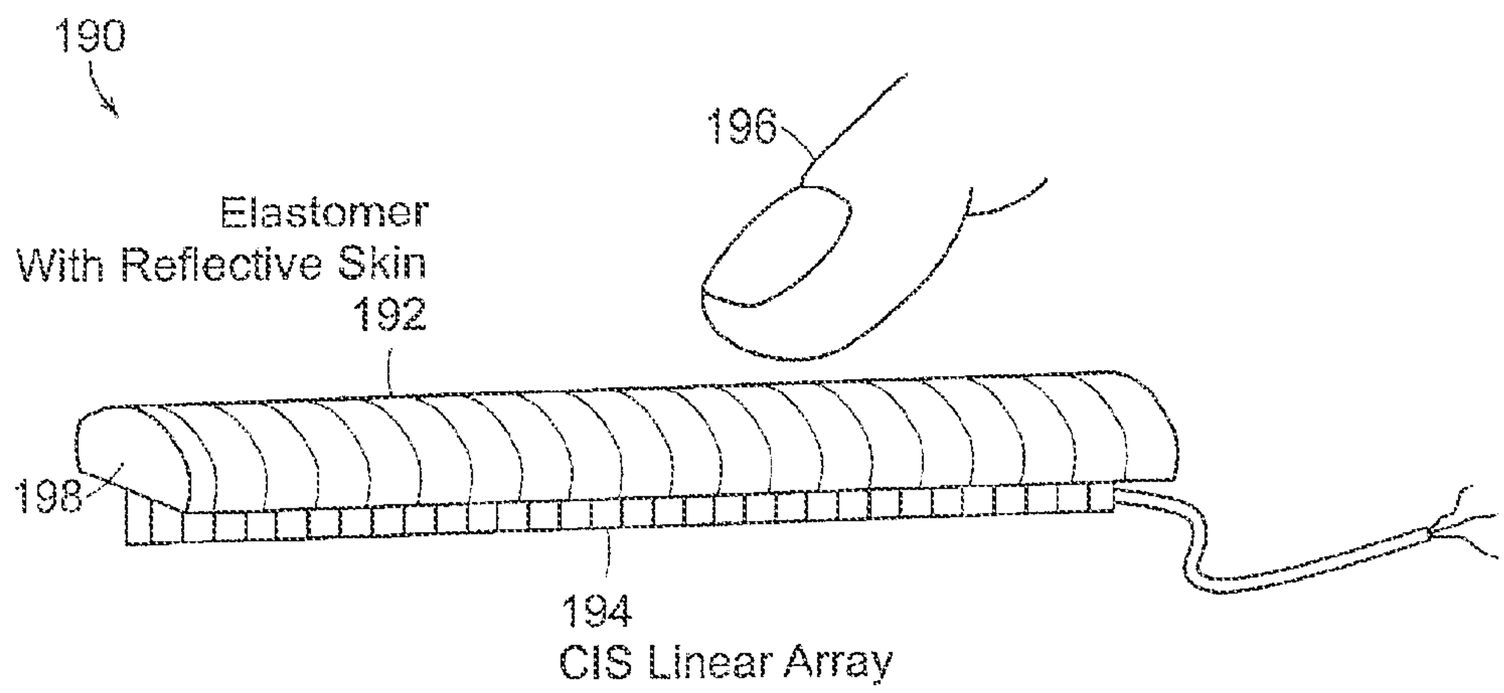
190
196
Elastomer
With Reflective Skin
192
198
194
CIS Linear Array

FIG. 10

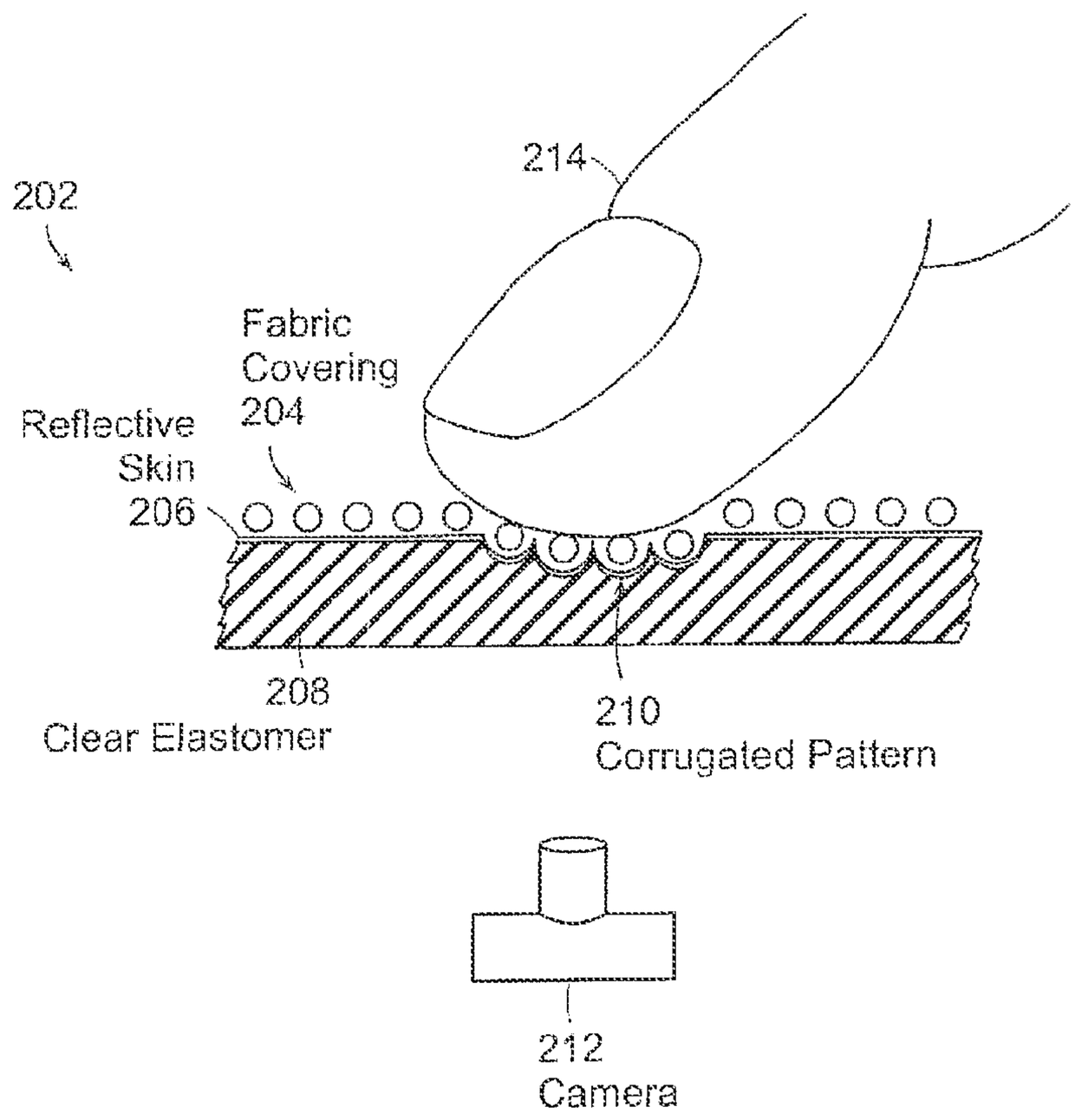
214
202
Fabric
Covering
204
Reflective
Skin
206
208
Clear Elastomer
210
Corrugated Pattern
212
Camera

FIG. 11

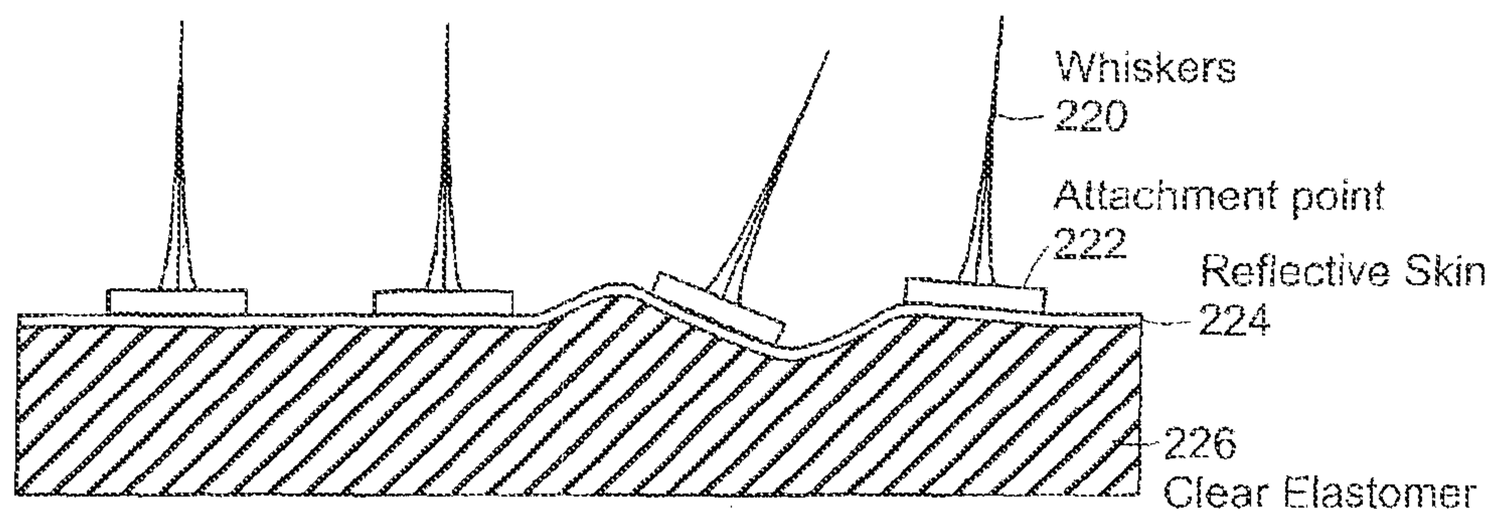
Whiskers
220
Attachment point
222
Reflective Skin
224
226
Clear Elastomer

FIG. 12

New

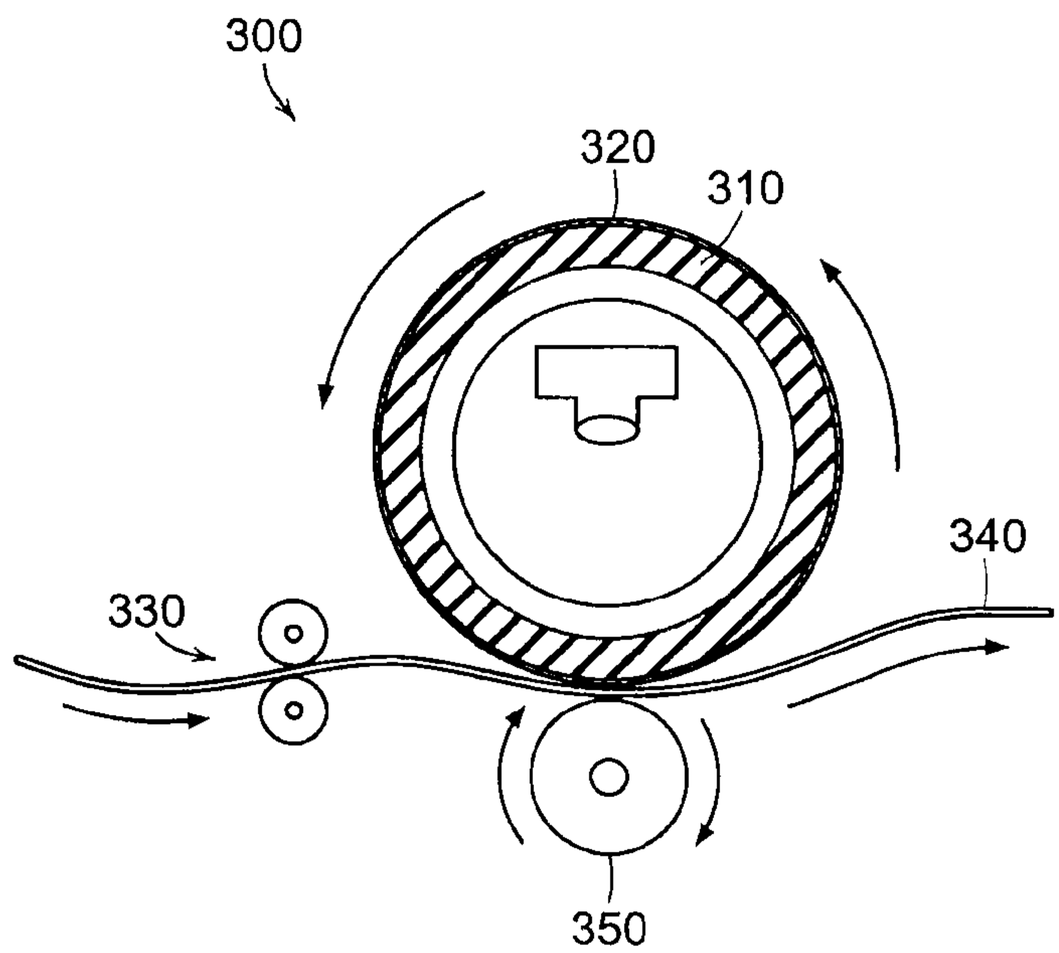

FIG. 13

TACTILE SENSOR USING ELASTOMERIC IMAGING

Matter enclosed in heavy brackets [ ] appears in the original patent but forms no part of this reissue specification; matter printed in italics indicates the additions made by reissue; a claim printed with strikethrough indicates that the claim was canceled, disclaimed, or held invalid by a prior post-patent action or proceeding.

PRIORITY INFORMATION

More than one reissue patent application has been filed for the reissue of U.S. Pat. No. 8,411,140, which include U.S. Reissue patent application Ser. No. 13/971,456, filed Aug. 20, 2013, U.S. Reissue patent application Ser. No. 14/045,668, filed Oct. 3, 2013, U.S. Reissue patent application Ser. No. 14/045,647, filed Oct. 3, 2013, U.S. Reissue patent application Ser. No. 14/045,620 filed Oct. 3, 2013, and U.S. Reissue patent application Ser. No. 14/045,594 filed Oct. 3, 2013. This application *is a continuation reissue of application Ser. No. 13/971,456, which is an application for reissue of U.S. Pat. No. 8,411,140, and thereby* claims priority from provisional application Ser. No. 61/073,904 filed Jun. 19, 2008, which is incorporated herein by reference in its entirety.

SPONSORSHIP INFORMATION

This invention was made with government support under grant number BCS-0345805 awarded by the National Science Foundation. The government has certain rights in this invention.

BACKGROUND OF THE INVENTION

The invention is related to the field of sensors, and in particular to tactile sensors.

A variety of 2-D tactile sensors have been described in the art. In a typical sensor, an array of individual elements change some electrical property, such as resistance or capacitance, in response to pressure. The electrical changes are sensed and conveyed via wires or other electronic means to the controller or user. Another type of tactile sensor is optical. Some optical properly such as luminance or reflectance changes as a result of pressure, and a light sensing system detects and conveys the signal to the controller or user.

For an application such as a robot fingerpad, there are a number of properties that are desired in a tactile sensor. It should have high resolution (be able to make fine spatial discriminations), have high sensitivity (be able to detect small variations in pressure), and be compliant (able to elastically deform in response to pressure). The tactile sensor should be manufacturable with reasonably large areas. It should be easily manufactured using inexpensive materials. It has been impossible to achieve all of these goals in a single sensor.

SUMMARY OF THE INVENTION

According to one aspect of the invention, there is provided a tactile sensor including a photosensing structure, a volume of elastomer that is capable of transmitting an image, and a reflective skin covering the volume of elastomer. The reflective skin is illuminated through the volume of elastomer by one or more light sources, and has particles that reflect light incident on the reflective skin from within the volume of elastomer. The reflective skin is geometrically altered in

response to pressure applied by an entity touching the reflective skin, the geometrical alteration causing localized changes in the surface normal of the skin and associated localized changes in the amount of light reflected from the reflective skin in the direction of the photosensing structure. The photosensing structure is positioned to receive a portion of the reflected light in the form of an image, the image indicating one or more features of the entity producing the pressure.

According to another aspect of the invention, there is a method of performing tactile sensing. The method includes providing a volume of elastomer capable of transmitting an image, and covering the volume of elastomer with a reflective skin. The reflective skin is illuminated through the volume of elastomer by one or more light sources, and has particles that reflect light incident on the reflective skin from within the volume of elastomer. The method also includes geometrically altering the reflective skin in response to pressure applied by an entity touching the reflective skin, the alteration causing localized changes in the surface normal of the skin and associated localized changes in the amount of light reflected from the reflective skin in the direction of a photo sensing structure. The photosensing structure is positioned to receive a portion of the reflected light in the form an image, the image indicating one or more features of entity producing the pressure.

BRIEF DESCRIPTION OF THE DRAWINGS

FIG. **1** is a schematic diagram illustrating the elements of a sensor comprising a clear elastomer, a reflective skin, a light source, and a camera in accordance with the invention;

FIG. **2** is a photograph illustrating a slab of a clear elastomer covered with a skin containing fine gold-colored flakes, pressed against a twenty dollar bill;

FIG. **3** is a photograph illustrating a slab of a clear elastomer covered with a skin containing fine gold-colored flakes, pressed against a sea urchin shell;

FIGS. **4**A-**4**D are schematic diagrams illustrating the elements of an imaging system that can be used in a compact structure;

FIGS. **5**A and **5**B are schematic diagrams illustrating the elements of an imaging system using diffused light and edge illumination in accordance with the invention;

FIGS. **6**A-**6**B are schematic diagrams illustrating the technique used in accordance with the invention to measure deformation and shear;

FIGS. **7**A and **7**B are schematic diagrams illustrating the various tactile sensor arrangements used in accordance with the invention;

FIG. **8** is a schematic diagram illustrating a structure to reconstruct 3D shape of an object;

FIG. **9** is a schematic diagram illustrating a large area high resolution sensor formed by tiling a set of smaller sensors;

FIG. **10** is a schematic diagram illustrating a contact image sensor (CIS) linear array being used directly in a tactile sensor structure in accordance with the invention;

FIG. **11** is a schematic diagram illustrating a fabric covering on the reflective skin; and

FIG. **12** is a schematic diagram illustrating the use hair or whiskers on the inventive tactile sensor structure.

FIG. 13 is a schematic diagram illustrating the elements of a rolling scanner.

DETAILED DESCRIPTION OF THE INVENTION

The invention provides a new approach to making tactile sensors that attain high sensitivity, high spatial resolution, and

low cost. In addition, it can be built in a compliant form, so that a robot finger incorporating this sensor can deform elastically in depth, following the profile of the object being manipulated, thereby allowing good control.

An exemplary embodiment of the invention, as shown in FIG. **1**, is made from slab of clear elastomer, **3**, supported by a rigid sheet **7** made of glass or other rigid clear material. The surface of the elastomer is coated with a reflective layer **2**, referred to as the "skin," which is made, for example, from an elastomeric paint comprising metallic powder embedded in an elastomeric material. The skin has an inner surface (facing the elastomer) and an outer surface (facing the outside world). Light from an illuminator **5** passes through the rigid support **7** and the clear elastomer **3** and strikes the reflective skin **2**. When an object such as a finger **1** applies pressure to the outer surface of the skin, it causes a distortion of the skin. Local variations in pressure lead to local variations in the skin's surface normal. A change in the surface normal leads to a change in the amount of light reflected in a given direction. A camera **4** views the inner skin and records the reflected light as an image. The image pattern is the result of the pressure pattern, and thus conveys information about the pressure pattern. Note that the image pixel values do not directly encode pressure. They encode the angle of surface normal, which is indicative of the spatial variation of the pressure.

The clear elastomer can be composed of a wide range of materials including but not limited to silicone rubber, polyurethane, thermoplastic elastomer, plastisol, natural rubber, polyisoprene, polyvinyl chloride, or a mixture thereof. Typically, the hardness of the elastomer, as measured on the Shore A scale, will range between 5 and 90. The reflective skin is also elastomeric, and will typically have a hardness that is equal to or greater than that of the clear elastomer body. The reflective skin may be comprised of the same material as the body, or of a different material.

The sensor skin can be made by adding reflective particles to the elastomer when it is in a liquid state, via solvent or heat, or before curing. This makes a reflective paint that can be attached to the surface by standard coating techniques such as spraying or dipping. The skin may be coated directly on the surface of the bulk elastomer, or it may be first painted on a smooth medium such as glass and then transferred to the surface of the bulk material and bound there. Also, the particles (without binder) can be rubbed into the surface of the bulk elastomer, and then bound to the elastomer by heat or with a thin coat of material overlaid on the surface. Also, it may be possible to evaporate, precipitate, sputter, other otherwise attach thin films to the surface.

The reflective particles in the skin may reflect light directionally or non-directionally. If the particles reflect light uniformly in all directions regardless of the light's angle of incidence, the resulting skin will behave like a Lambertian surface, which is entirely non-directional. Titanium dioxide powder, as is used in white paint, leads to a largely Lambertian reflectance. If the reflective particles are comprised of fine metal flakes, and if these flakes tend to be aligned with each other, then the skin will reflect light directionally, meaning that, for a given angle of incident light, there will be a non-uniform distribution of reflected light. If the metal flakes are flat and mirror-like, and if they are well aligned with each other, the distribution of reflected light will be highly directional. If the metal flakes are rough or irregular, or if there is randomness in their alignment, then the distribution of reflected light will be moderately directional, with an appearance resembling sandblasted metal. Directional reflectance can also be obtained with flakes of other materials such as mica. In addition there are pigments comprising flakes covered with multilayer interference coatings that can have different directionality for different wavelengths of light.

Further still, metal flake powder of aluminum can be used.

Skin with highly directional reflectance illuminated by a highly directional light source yields a device that is sensitive to small variations in pressure. This sensitivity can be increased by recording the skin's image in its resting state, and using this as a baseline image that is subtracted from images recorded when pressure is applied to the skin. Softer elastomers lead to devices that are more sensitive to low amplitude pressure patterns.

FIG. **2** shows an image obtained with a skin containing gold-colored bronze flakes that are directionally selective. A slab of a clear elastomer about 1 cm thick, was mounted on a sheet of glass. The slab was coated with a thin skin containing fine gold-colored flakes. The slab was pressed against a twenty dollar bill, and the skin was viewed through the glass and the elastomer. Due to the way that bills are printed, the printing on a twenty dollar bill has a raised relief. When the skin is pressed against the bill, its surface deforms in accordance with the bill's relief. The deformation causes a variation in the amount of light reflected toward the camera, revealing the fine details of the bill's surface in the form of an image.

Another example is shown in FIG. **3**. A slab of clear elastomer was coated with a reflective skin made with bronze flakes and was placed, skin side up, on the platen of a flatbed scanner. A sea urchin shell was pressed against the reflective skin, causing 3D deformation in the contact region **6**. The untouched region **8** remained smooth and the image of this region retained its original smooth appearance. The scanner's internal light source was reflected differently depending on the reflective skin's surface normal, resulting in an image that is recognizable as a shaded relief of the sea urchin shell.

The image pixel values do not directly encode pressure. If spatially uniform pressure is applied to the entire skin surface, there will be no change in surface normal and thus no observable variation in the image. The image pixel values depend on surface normal, which in turn depends on the spatial derivative of pressure. Thus, it is the pattern of pressure variation across the surface that is encoded in the image.

Pressure can be applied to the skin by a rigid object or a non-rigid object. In the case of a non-rigid object, such as a fingertip, both the object and the skin will deform, and the skin's shape will depend on the balance of pressures that the skin and the object exert on each other. Pressure can also be applied by a liquid or gas. For example, a stream of water striking the skin causes it to deform, and the pattern of deformation is visible in the image. If the skin and the elastomer are made of very soft gel-like materials, and if at froth of soap bubbles is placed in contact with the skin, one can visualize the forces exerted by the soap bubble walls.

FIGS. **4**A-**4**D show the elements of the imaging system that can be used in a compact structure such as a robot fingertip. In the illustrated embodiment, there is a rounded piece of elastomer, which is mounted on a rigid member.

FIG. **4**A shows a pair of LEDs **12** and a small camera **14**, which are looking through the rounded piece of elastomer **16** positioned on a rigid support **17**. The skin **18** of the elastomer is reflective, and the camera forms an image of the inner side of the skin. FIG. **4**B shows an example wherein the camera is a pinhole camera **20**. FIG. **4**C shows a folded path optical system that utilizes a curved mirror **22** which reflects light from the skin to the camera **24**. FIG. **4**D shows the case Where the skin is imaged with an endoscope **26** (or the related videoscope, borescope, fiberscope, or the like). This allows the camera **28** to be placed at a distance from the sensor.

FIG. **5**A shows an exemplary embodiment of a sensor **30** using an extended diffuse source of light **31**. The diffuse light source **31** and camera **36** are positioned on a rigid support **32**. A volume of clear elastomer **34** is positioned on the rigid support **32**.

To make the structure compact, it may be preferable to introduce the light at the edge of the support. FIG. **5**B shows another exemplary embodiment of the invention where one or more light sources **33** illuminates the sensor from a side or edge of the support **32**, preferably made of glass or other clear material. Light will bounce off the back face of the support by total internal reflection, and will also be reflected by the reflective skin surface **38** by ordinary reflection. This will cause many of the light rays to remain within the glass+ elastomer volume; these rays will illuminate the reflective skin surface **38**, and the surface can be viewed by the camera **36**. It may be advantageous to use a glass wedge rather than an ordinary sheet of glass. With a wedge (for example, the "Light Wedge" book light) the light reflects oft the front and back faces successively, making a larger angle with each bounce. This causes a greater amount of light to exit the wedge at larger distance from the light source.

FIGS. **6**A-**6**B show two exemplary embodiments of the invention wherein deformation and shear can be sensed. Deformation (in particular, changes in surface normal) can be sensed by measuring the change in intensity at each point on the skin **44** produced by a work piece **46**, as shown in FIG. **6**A. FIG. **6**B shows a case in which the surface **48** exerts shear forces on the elastomer and skin **50**, causing no change in surface normal, but causing a lateral displacement. The skin typically contains a visible microtexture due to the random pattern of reflective particles, and shear causes a displacement of this microtexture. Motion analysis methods can then be used to estimate the shear.

In some applications it is desirable that the light source and the camera be placed at optical infinity so that the angle of incidence and reflectance are parallel when the device is in its resting state. This causes the devices optical properties to be spatially uniform across the recorded image. FIG. **7**A shows a slab of elastomer **136** covered with reflective skin **134** and mounted on lens **146**. An object **138** applies pressure to skin **134**. The focal length of the lens is such that the light rays from light source **140** are refracted to be parallel when striking skin **134**. Camera **144** views the skin through the same lens. The optical properties of the skin **134** as observed by camera **144** will be fairly uniform across the image.

FIG. **7**B shows an arrangement in which a slab of elastomer **160** is covered by a reflective skin **152**. The elastomer is mounted on a right angle prism **162**. Light source **156** passes through lens **164**, emerging as parallel rays that enter prism **162** and strike skin **152**. An object **154** presses on the skin **152**, causing local variation in surface normal. Camera **158** views the skin through a lens **166** that places the skin at optical infinity for that camera. The optical properties of the skin as observed by the camera will be fairly uniform across the image.

In accordance with another exemplary embodiment of the invention, it is desirable to reconstruct the 3-D shape of the deformed surface. In FIG. **8**, there are two light sources, **80** and **82**, which illuminate the skin **84** thought the elastomer **79**. Preferably, the two light sources illuminate the surface from substantially different azimuths, for example one aligned with the x-axis and the other with the y-axis of the slab. The light sources are turned on one after the other and two images are recorded by camera **78**. These two images can then be analyzed in accord with the known methods of photometric stereo to estimate the surface normal and surface height at every position. If the two lights **80** and **82** are of different colors, for example red and blue, and if the camera **78** is a color camera, then it is possible to record the two images at the same time in separate color charnels. Photometric stereo benefits from the use of additional images. With a color camera it is straighforward to use three light sources and to separate the channels into three images. Alternately, one can use an arbitrary number of light sources if they are turned on one at a time.

The use of multiple lights to get multiple images is useful even when 3D reconstruction is not being performed. Each light brings out surface normal variation along one axis, but not along the orthogonal axis. By using two or more lights, the lights can be arranged so that one light reveals the relief that is missed by another light. This makes it possible to distinguish a wide range of surface normals in different directions. The preferred method of using two or more lights is to have them be different colors, so that a color camera will separate the information about the different lights into different color channels.

It is also possible to use standard stereoscopic techniques as well, in which multiple cameras are placed in different azimuths relative to the skin of the sensor. The techniques set forth herein of sensing changes in luminance are believed to yield better sensitivity and resolution in many applications relative to known techniques. Furthermore, stereopsis can be used in combination with the techniques disclosed herein. The microtexture of the skin and/or the deformation image can be used to establish correspondence.

In some applications it is desirable to make a sensor surface that covers a large area. For example one may require a touchpad that covers an entire desktop. If the device is simply scaled up, then the camera must be placed at a large distance from the surface, making the device undesirably large. One way to ameliorate this problem is to use the methods of folded optics that are used, for example, in many rear projection televisions. Another way is to use a tiled array of cameras, as shown in FIG. **9**. The reflective skin **180** covers the clear elastomer **182** which is mounted on a rigid transparent support **184**. An array of cameras **186** is placed a short distance from the elastomer and skin. The cameras can be arranged so that their image slightly overlap, and these images can be combined into a single large image by standard stitching techniques.

In another embodiment, a sensor is formed into a cylinder, which can be rolled over the surface of the object. In one illustrative configuration, the sensor would look like a brayer or paint roller. As the roller rolls over the surface, a video camera inside the roller is aimed continuously at the portion that is in contact with the surface of the object. The series of images so obtained can be combined into a single image by the same methods that are used to obtain panoramic photographs from a series of smaller photographs.

Alternatively, the roller could be in a fixed position while the surface of interest was pulled over it. For example, as shown in FIG. 13, an illustrative embodiment of a rolling scanner is a counterfeit banknote detector 300 which has a clear elastomer 310 formed into a cylinder, and a reflective skin 320. The detector 300 also has a slot 330 for feeding a banknote 340. A roller 350, driven by a motor, pulls in the banknote 340 and forms an image of the banknote's surface shape based on an embossed surface of the banknote's paper and/or the raised level of printed ink. A genuine banknote will have a known profile, and a mismatch would indicate a counterfeit banknote.

In some applications it is advantageous for the skin to have a texture rather than being smooth. In some situations one

wishes to study the distribution of pressures across a region of human skin. For example, when a skin care product is applied to the skin, the application process produces a certain distribution of pressure on the skin which changes over time. In order to estimate this changing distribution, a sensor can be made that mimics the texture, elasticity, and other properties of human skin. When a skin care product is, for example, wiped across the artificial skin, it causes the skin to distort in a manner similar to that of human skin. The pattern of distortion can be assessed by making a tactile sensor with mechanical properties emulating human skin. This means that the reflective skin has texture and elasticity like the upper layer of human skin, and the clear elastomer beneath the skin has mechanical properties like the deeper layers of human skin. Multiple layers of clear elastomer with different mechanical properties are required to mimic the complex properties of human skin. When a skin care product is applied to this device, the reflective skin distorts in response to the mechanical forces applied to it, and this distortion is viewed by a camera looking through the clear elastomer layers.

In some applications it may be desired to study the distribution of pressure over the surface of a specific object, such as a tire or the sole of a shoe. It is possible to form the tactile sensor into the same shape as this specific object, and with the same hardness or other mechanical properties as this specific object.

In other embodiments, it is not necessary that the image be formed by a camera. Many flatbed scanners use a Contact Image Sensor, or CIS, which is a linear array of lenses and photosensors placed in close contact with the object being scanned. No image forming lens is required. FIG. **10** shows a strip of elastomer **198** covered with reflective skin **192** and mounted on CIS **194**. When object **196** presses on the skin, it modifies the surface normal, which modifies the amount of light that will be reflected toward the photosensing elements in that neighborhood. The result is a 1D image that encodes information about the location and amplitude of the pressure variation on the skin.

In another embodiment, a multitouch touchscreen device is made in conjunction with a flat panel LED display. A thin sheet of clear elastomer, covered with a semi-reflective skin, covers the front surface of the display. Most of the light that is emitted by the LED's passes through the skin and is seen by a viewer. A portion of the light is reflected by the skin back toward the LEDs. LEDs have the ability to act as photosensors, and thus can be used to measure the amount of reflected light. Pressure variation on the skin causes local changes in the surface normal, which changes the amount of light reflected toward any given LED in the array. The LED photosensing responses comprise an image that is indicative of the pattern of pressure on the skin. This image indicates where the user is touching the screen. In addition, because this is an inherently high resolution image, it is possible to detect the fingerprint of the user. This allows each finger of each user to be distinguished.

FIG. **11** shows another exemplary embodiment of a tactile sensor **202** in accordance with the invention. A stretchy fabric is placed over the reflective skin. For some applications such a robot manipulator this fabric will produce a surface with desirable mechanical qualities, including the frictional qualities and the ability to withstand the forces of industrial usage. FIG. **11** shows a cross section of a fabric covering **204** that is attached to the reflective skin **206** on the clear elastomer **208**. An object **214** presses on the fabric causing the skin to take on the texture **210** of the fabric. In the case of a woven fabric this pattern appears as a gridwork of fibers corresponding to the fabric's construction. Greater pressure leads to a higher contrast fabric pattern, as seen by camera **212**. Local properties of this pattern, including the mean value and the contrast, are indicative of the pressure applied at that location.

In another exemplary embodiment, the device is used to measure fluid flow. FIG. **12** shows hairs or whiskers **220** that are attached to the reflective skin **224** at attachment points **222**. The attachment points are small pads that are rigidly attached to the whiskers. When fluid flows across the whiskers, it causes the whiskers to tilt, causing the attachment pads to tilt, causing the reflective skin's surface normal to change. The skin is viewed by a camera, and the variation in surface normal causes a variation in image radiance from point to point. The image indicates the speed and direction of fluid flow across each whisker.

There are applications for which high resolution is not needed and not desirable. An extra layer of elastomer on top of the skin acts as a mechanical lowpass filter. For example, a 1 mm thick layer reduces the resolution to be on the order of 1 mm.

A fluorescent pigment can be used in the skin, illuminated by Ultraviolet (UV) light or blacklight. If the blacklight comes at a grazing angle, it can readily reveal variations in surface normal. The material will be fairly close to Lambertian. To reduce interreflections, one would select a surface that appears dark to emitted wavelengths. This principle is true with ordinary light as well. If one is using a Lambertian pigment in the skin, it is better for it to be gray than white, to reduce interreflections.

Blacklight or UV can be used to illuminate a fluorescent surface, which would then serve as a diffuse source. In some cases, it would be useful to use a single short flash (for instance, recording the instantaneous deformation of an object against the surface) or multiple periodic (strobed) flashes (to capture rapid periodic events or to modulate one frequency down to another frequency.)

Although the present invention has been shown and described with respect to several preferred embodiments thereof, various changes, omissions and additions to the form and detail thereof, may be made therein, without departing front the spirit and scope of the invention.

What is claimed is:

[1. A tactile sensor comprising:

a photosensing structure;

a volume of elastomer capable of transmitting an image; and

a reflective skin covering said volume of elastomer, said reflective skin being illuminated through said volume of elastomer by one or more light sources, said reflective skin having particles that non-directionally reflect light incident on the reflective skin from within the volume of elastomer, said reflective skin being geometrically altered in response to pressure applied by an entity touching said reflective skin, said geometrical alteration causing localized changes in the surface normal of said skin and associated localized changes in the amount of light reflected from said reflective skin in the direction of said photosensing structure; wherein

said photosensing structure is positioned to receive a portion of said reflected light in the form of an image, said image indicating one or more features of the entity producing said pressure.**]**

[2. The tactile sensor of claim **1**, wherein said volume of elastomer comprises silicone rubber, polyurethane, plastisol, thermoplastic elastomer, natural rubber, polyisoprene, polyvinyl chloride or a mixture thereof.**]**

[3. The tactile sensor of claim **1**, wherein said volume of elastomer comprises a Shore A hardness between 5 and 90.**]**

[**4**. The tactile sensor of claim **1**, wherein the volume of elastomer is in the form of a slab.]

[**5**. The tactile sensor of claim **1**, wherein said photosensing structure comprises a camera.]

[**6**. The tactile sensor of claim **1**, wherein said photosensing structure comprises an array of sensing elements.]

[**7**. The tactile sensor of claim **1**, wherein said one or more features comprise roughness of said entity.]

[**8**. The tactile sensor of claim **1**, wherein said one or more features comprise the location, amplitude, or direction of the applied pressure.]

[**9**. The tactile sensor of claim **1**, wherein said one or more features comprise the shape, size, or profile of an object producing said pressure.]

[**10**. The tactile sensor of claim **1**, wherein said one or more features comprise the motion or slip of a surface touching the reflective skin.]

[**11**. The tactile sensor of claim **1**, wherein the sensor has physical properties that are similar to those of human skin.]

[**12**. The tactile sensor of claim **1**, wherein the sensor is formed in the shape of a specified object.]

[**13**. The tactile sensor of claim **1**, wherein the reflective skin is illuminated by two or more light sources of different colors.]

[**14**. A method of performing tactile sensing, comprising:

(a) providing a volume of elastomer capable of transmitting an image;

(b) covering the elastomer with a reflective skin having an inner surface facing the elastomer and an outer surface, wherein the reflective skin comprises particles that non-directionally reflect light incident on the inner surface from within the volume of elastomer;

(c) illuminating the reflective skin through the volume of elastomer with one or more light sources, wherein at least a portion of the light is reflected by the inner surface of the reflective skin;

(d) contacting the outer surface of the reflective skin with an entity, wherein the contact produces pressure that geometrically alters the reflective skin, wherein the alteration causes localized changes in the inner surface of the reflective skin, and wherein the localized changes in the inner surface of the reflective skin cause associated localized changes in the light reflected from the inner surface of the reflective skin;

(e) positioning a photosensing structure to receive a portion of the light reflected from the inner surface of the reflective skin in the form of an image indicating one or more features of the entity contacting the outer surface of the reflective skin.]

[**15**. The method of claim **14**, wherein said volume of elastomer comprises silicone rubber, polyurethane, plastisol, thermoplastic elastomer, natural rubber, polyisoprene, polyvinyl chloride or a mixture thereof.]

[**16**. The method off claim **14**, wherein said volume of elastomer comprises a Shore A hardness between 5 and 90.]

[**17**. The method of claim **14**, wherein the volume of elastomer is in the form of a slab.]

[**18**. The method of claim **14**, wherein said photosensing structure comprises a camera.]

[**19**. The method of claim **14**, wherein said photosensing structure comprises an array of sensing elements.]

[**20**. The method of claim **14**, wherein said one or more features comprise roughness of said entity.]

[**21**. The method of claim **14**, wherein said one or more features comprise the location, amplitude, or direction of the applied pressure.]

[**22**. The method of claim **14**, wherein said one or more features comprise the shape, size, or profile of an object producing said pressure.]

[**23**. The method of claim **14**, wherein said one or more features comprise the motion or slip of a surface touching the reflective skin.]

[**24**. The method of claim **14**, wherein the sensor has physical properties that are similar to those of human skin.]

[**25**. The method of claim **14**, wherein the sensor]is formed in the shape of a specified object.

[**26**. The method of claim **14**, wherein the reflective skin is illuminated by two or more light sources of different colors.]

27. A tactile sensor comprising:

a photosensing structure; and

a volume of elastomer capable of transmitting an image, the volume of elastomer having a reflective surface, the reflective surface having particles that cause the reflective surface to reflect light incident on the reflective surface from within the volume of elastomer with a directional selectivity ranging from moderately directional to non-directional, the reflective surface being geometrically altered in response to pressure applied by an entity touching the reflective surface, the geometrical alteration causing localized changes in the surface normal of the surface and associated localized changes in the amount of light reflected from the reflective surface in the direction of the photosensing structure; wherein

the photosensing structure is positioned to receive a portion of the reflected light in the form of an image, the image indicating one or more features of the entity producing the pressure.

28. The tactile sensor of claim 27, wherein the reflective surface comprises the particles bound to the elastomer.

29. The tactile sensor of claim 27, wherein the reflective surface comprises the particles included in a paint, the paint being applied to the elastomer.

30. The tactile sensor of claim 27, wherein the reflective surface comprises a reflective skin in contact with the elastomer.

31. The tactile sensor of claim 30, wherein the reflective skin is bound to the elastomer.

32. The tactile sensor of claim 27, the particles reflecting light substantially uniformly in all directions, and the particles causing the reflective surface to reflect light substantially non-directionally.

33. The tactile sensor of claim 27, the particles comprising flakes that exhibit at least one of surface roughness, irregular shape, and random alignment relative to each other, and the particles causing the reflective surface to reflect light moderately directionally.

34. The tactile sensor of claim 33, the flakes comprising bronze.

35. The tactile sensor of claim 33, the flakes comprising aluminum.

36. The tactile sensor of claim 27, the particles comprising titanium dioxide.

37. A method of performing tactile sensing, comprising:

providing a volume of elastomer capable of transmitting an image, the elastomer having a reflective surface having an outer surface, the reflective surface having particles that cause the reflective surface to reflect light incident on the reflective surface from within the volume of elastomer with a directional selectivity ranging from moderately directional to non-directional;

illuminating the reflective surface through the volume of elastomer with one or more light sources, wherein at least a portion of the light is reflected by the reflective surface;

contacting the outer surface of the reflective surface with an entity, wherein the contact produces pressure that geometrically alters the reflective surface, wherein the alteration causes localized changes in the reflective surface, and wherein the localized changes in the reflective surface cause associated localized changes in the light reflected from the reflective surface; and

positioning a photosensing structure to receive a portion of the light reflected from the reflective surface in the form of an image indicating one or more features of the entity contacting the outer surface of the reflective surface.

38. The method of claim 37, wherein the reflective surface comprises the particles bound to the elastomer.

39. The method of claim 37, wherein the reflective surface comprises the particles included in a paint, the paint being applied to the elastomer.

40. The method of claim 37, wherein the reflective surface comprises a reflective skin in contact with the elastomer.

41. The method of claim 40, wherein the reflective skin is bound to the elastomer.

42. The method of claim 37, the particles reflecting light substantially uniformly in all directions, and the particles causing the reflective surface to reflect light substantially non-directionally.

43. The method of claim 37, the particles comprising flakes that exhibit at least one of surface roughness, irregular shape, and random alignment relative to each other, and the particles causing the reflective surface to reflect light moderately directionally.

44. The method of claim 43, the flakes comprising bronze.

45. The method of claim 43, the flakes comprising aluminum.

46. The method of claim 37, the particles comprising titanium dioxide.

* * * * *