US00RE45146E

(19) **United States**

(12) **Reissued Patent**

Miyazaki et al.

(10) **Patent Number: US RE45,146 E**

(45) **Date of Reissued Patent: Sep. 23, 2014**

---

(54) COMPOSITE MULTI-LAYER SUBSTRATE AND MODULE USING THE SUBSTRATE

(71) Applicant: **Taiyo Yuden Co., Ltd.**, Tokyo (JP)

(72) Inventors: **Masashi Miyazaki**, Gunma (JP); **Mitsuhiro Takayama**, Misato (JP); **Tatsuro Sawatari**, Shimonoseki-Machi (JP)

(73) Assignee: **Taiyo Yuden Co., Ltd**, Tokyo (JP)

(21) Appl. No.: **13/846,941**

(22) Filed: **Mar. 18, 2013**

Related U.S. Patent Documents

Reissue of:

(64)	Patent No.:	**7,928,560**
	Issued:	**Apr. 19, 2011**
	Appl. No.:	**12/780,501**
	Filed:	**May 14, 2010**

U.S. Applications:

(63) Continuation of application No. 11/896,013, filed on Aug. 29, 2007, now Pat. No. 7,745,926, which is a continuation of application No. 10/515,953, filed as application No. PCT/JP03/06597 on May 27, 2003, now Pat. No. 7,348,662.

(30) **Foreign Application Priority Data**

May 30, 2002 (JP) 2002-156796

(51) **Int. Cl.**
H01L 23/04 (2006.01)

(52) **U.S. Cl.**
USPC **257/711**; 257/700; 257/E23.182; 257/679

(58) **Field of Classification Search**
USPC 257/700, 708, 679, 711, E23.062
See application file for complete search history.

(56) **References Cited**

U.S. PATENT DOCUMENTS

5,362,656 A	11/1994	McMahon
5,736,681 A	4/1998	Yamamoto et al.

(Continued)

FOREIGN PATENT DOCUMENTS

EP	0647090 A1	4/1995
JP	S54-008871 A	1/1979

(Continued)

OTHER PUBLICATIONS

Japanese Office Action dated Sep. 25, 2012, in a counterpart Japanese patent application No. 2012-178965.

(Continued)

Primary Examiner — Matthew W Such
Assistant Examiner — Krista Soderholm
(74) *Attorney, Agent, or Firm* — Chen Yoshimura LLP

(57) **ABSTRACT**

A composite multi-layer substrate comprising a flat plate-like core member formed of a material having an excellent electric conductivity, an excellent heat conductivity, and a high rigidity, a front resin layer and a rear resin layer covering at least the front and rear surfaces of the core member, and a bottomless hole formed in the core member through the front and rear sides of the core member, wherein an electronic component is installed in the bottomless hole, whereby since the strength of the composite multi-layer substrate can be assured by the rigidity of the core member, conventional prior art glass cloth can be eliminated, deterioration in the electric characteristics caused by ion migration can be avoided and will result in reduced production cost.

24 Claims, 12 Drawing Sheets

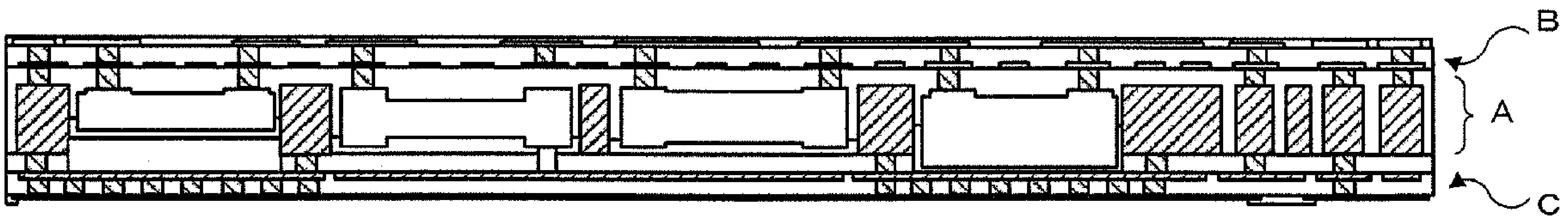

(56) References Cited

U.S. PATENT DOCUMENTS

5,865,934	A	2/1999	Yamamoto et al.	
5,868,887	A	2/1999	Sylvester et al.	
6,020,637	A	2/2000	Karnezos	
6,060,778	A	5/2000	Jeong et al.	
6,093,970	A *	7/2000	Ohsawa et al.	257/777
6,400,010	B1	6/2002	Murata	
6,452,255	B1	9/2002	Bayan et al.	
6,624,523	B2	9/2003	Chao et al.	
6,952,049	B1 *	10/2005	Ogawa et al.	257/700
2002/0053731	A1	5/2002	Chao et al.	
2002/0066955	A1	6/2002	Shibamoto et al.	
2003/0227077	A1	12/2003	Towle et al.	
2007/0206909	A1 *	9/2007	Wetter et al.	385/92

FOREIGN PATENT DOCUMENTS

JP	56-88398		7/1981
JP	56-88398	A	7/1981
JP	58-085372		5/1983
JP	58-85372	U	6/1983
JP	61-140593		8/1986
JP	1986-140593	U	8/1986
JP	61-287192		12/1986
JP	61-287192	A	12/1986
JP	S61-287194	A	12/1986
JP	S64-011400	A	1/1989
JP	S64-012598	A	1/1989
JP	H02-122534	A	5/1990
JP	05-129742		5/1993
JP	5-129742	A	5/1993
JP	07-086711		3/1995
JP	07-086711	A	3/1995
JP	10-270630		10/1998
JP	10-270630	A	10/1998
JP	11-017348		1/1999
JP	11-017348	A	1/1999
JP	2000-138453		5/2000
JP	2000-138453	A	5/2000
JP	2001-274034	A	10/2001
JP	2002-016327		1/2002
JP	2002-016327	A	1/2002
JP	2002-111226	A	4/2002

OTHER PUBLICATIONS

International Search Report (ISR) issued in PCT/JP03/06597 mailed in Aug. 2003.

* cited by examiner

FIG. 1A

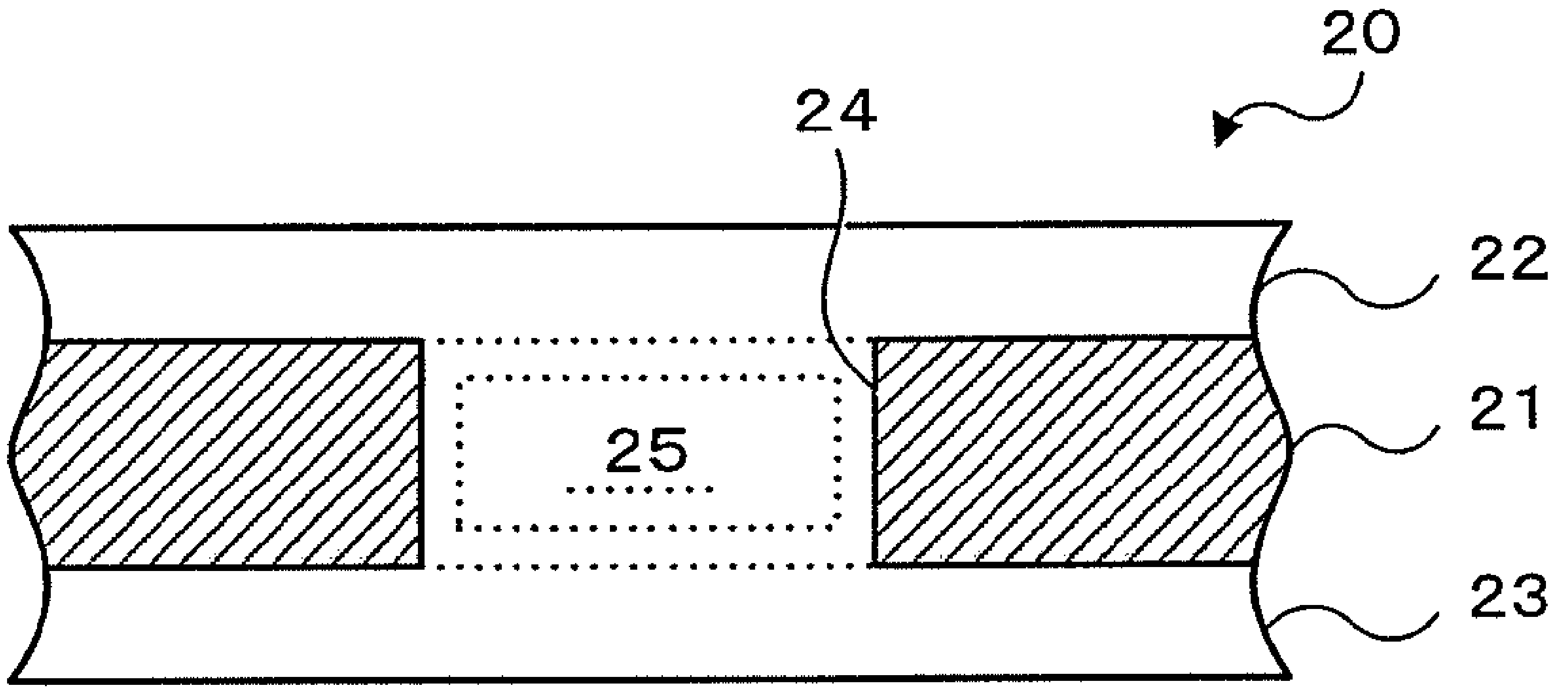

FIG. 1B

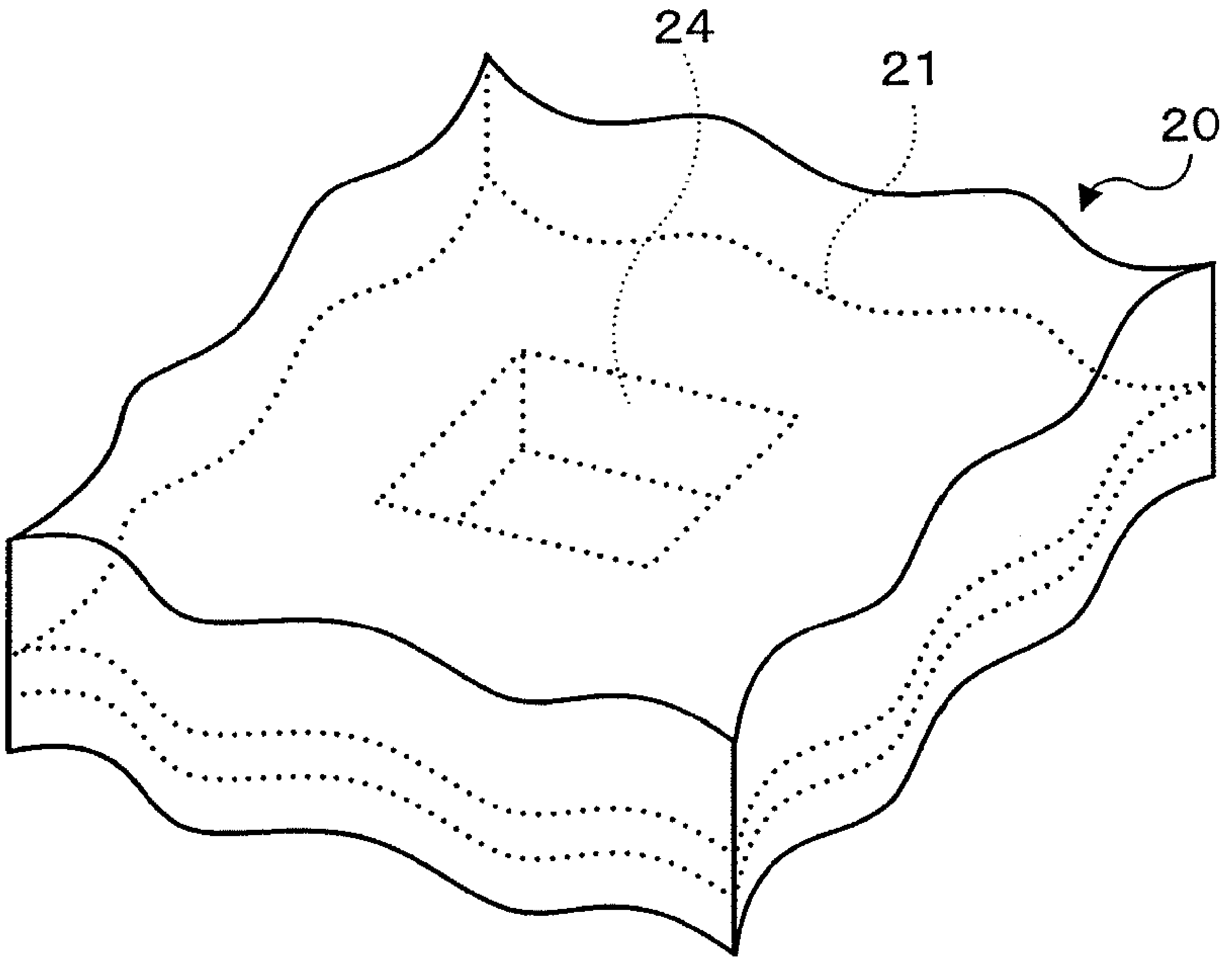

FIG. 1C

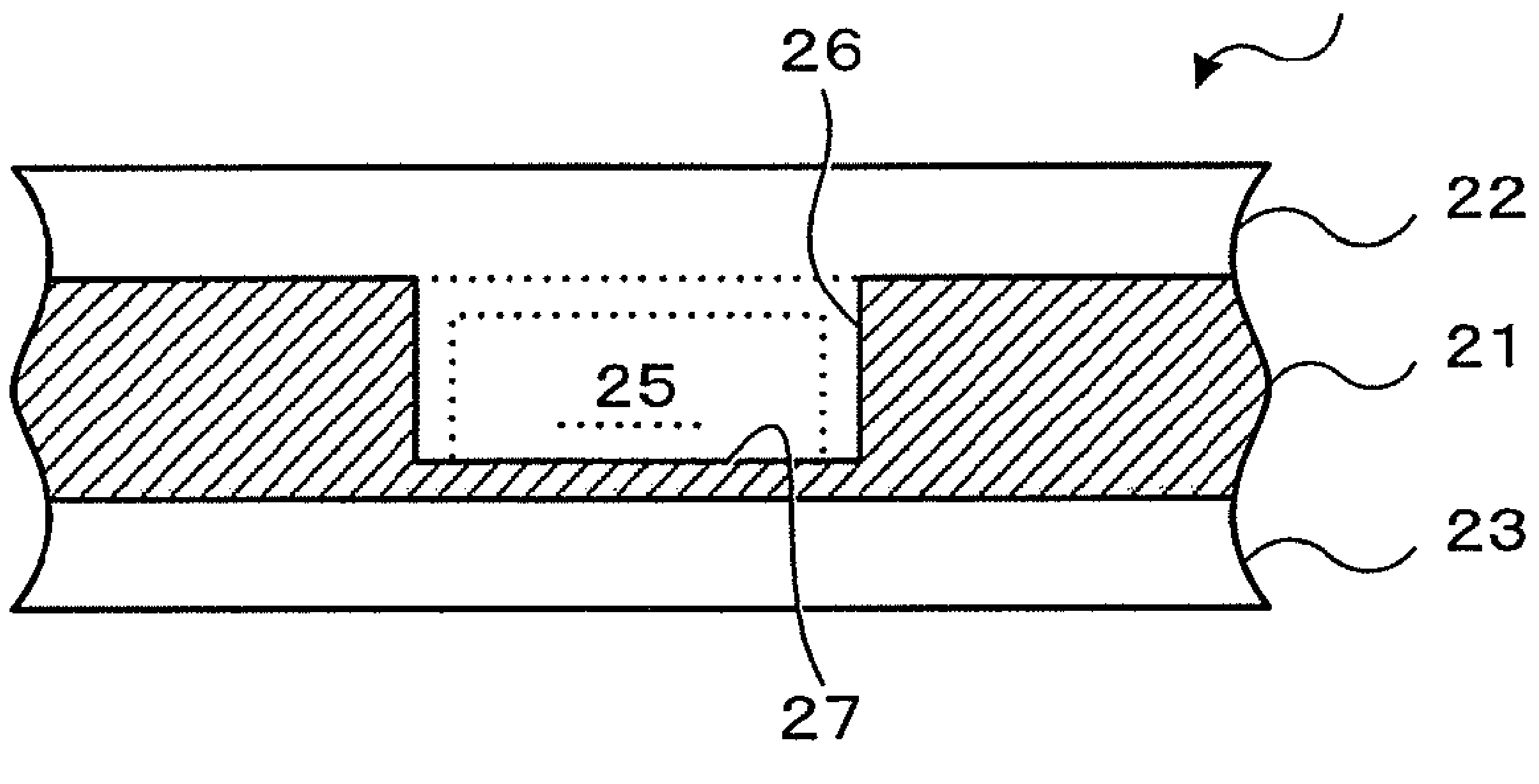

FIG. 2A

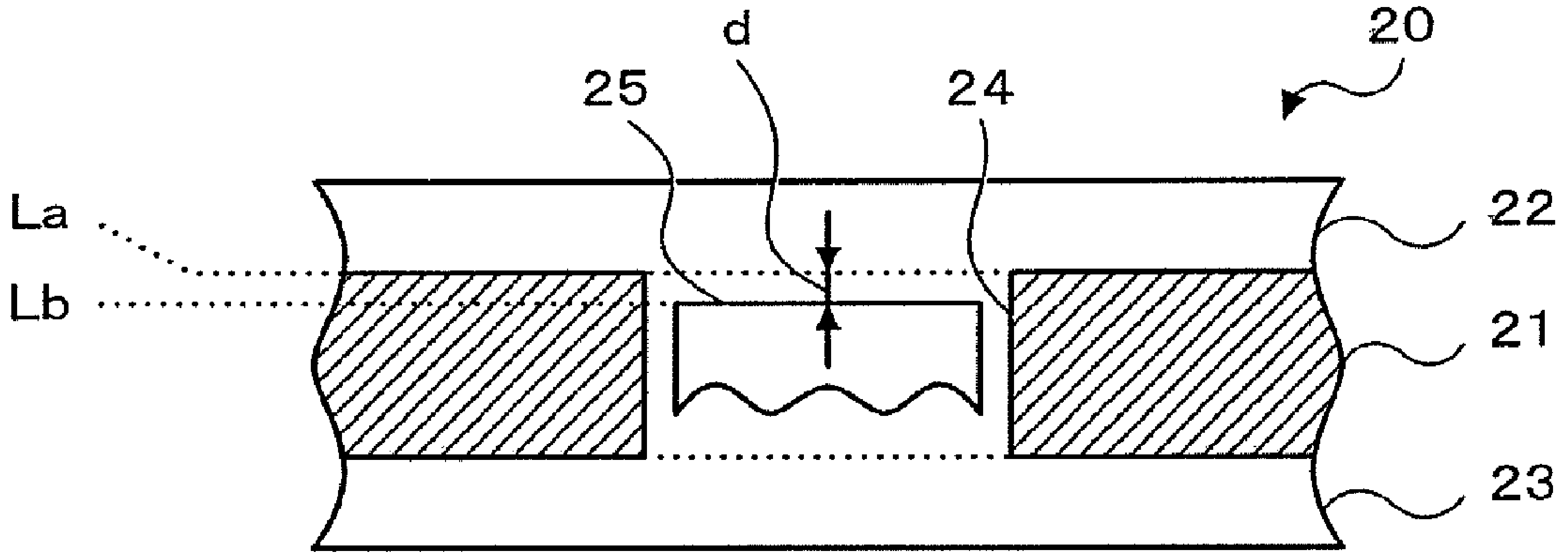

FIG. 2B

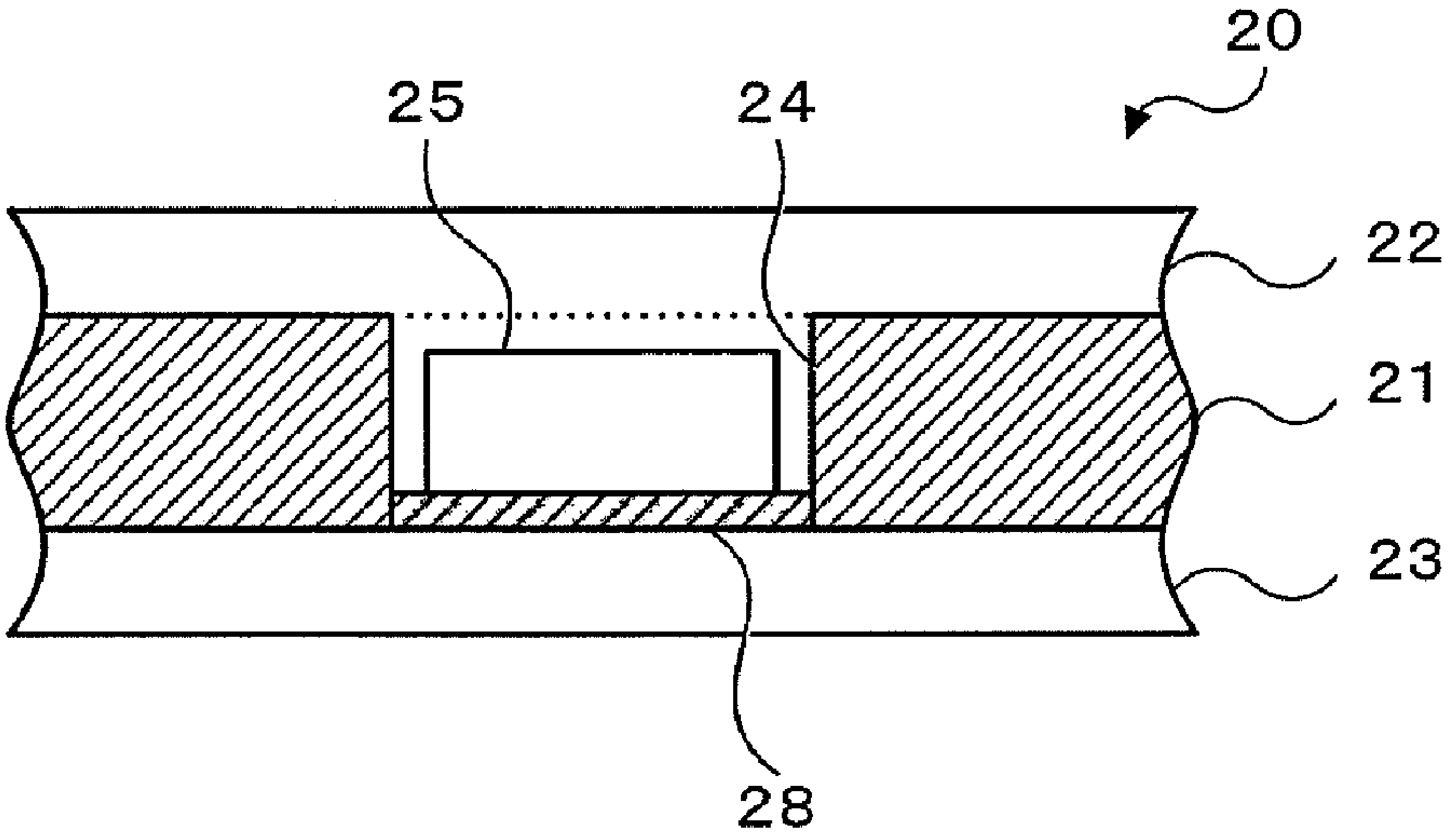

FIG. 3A

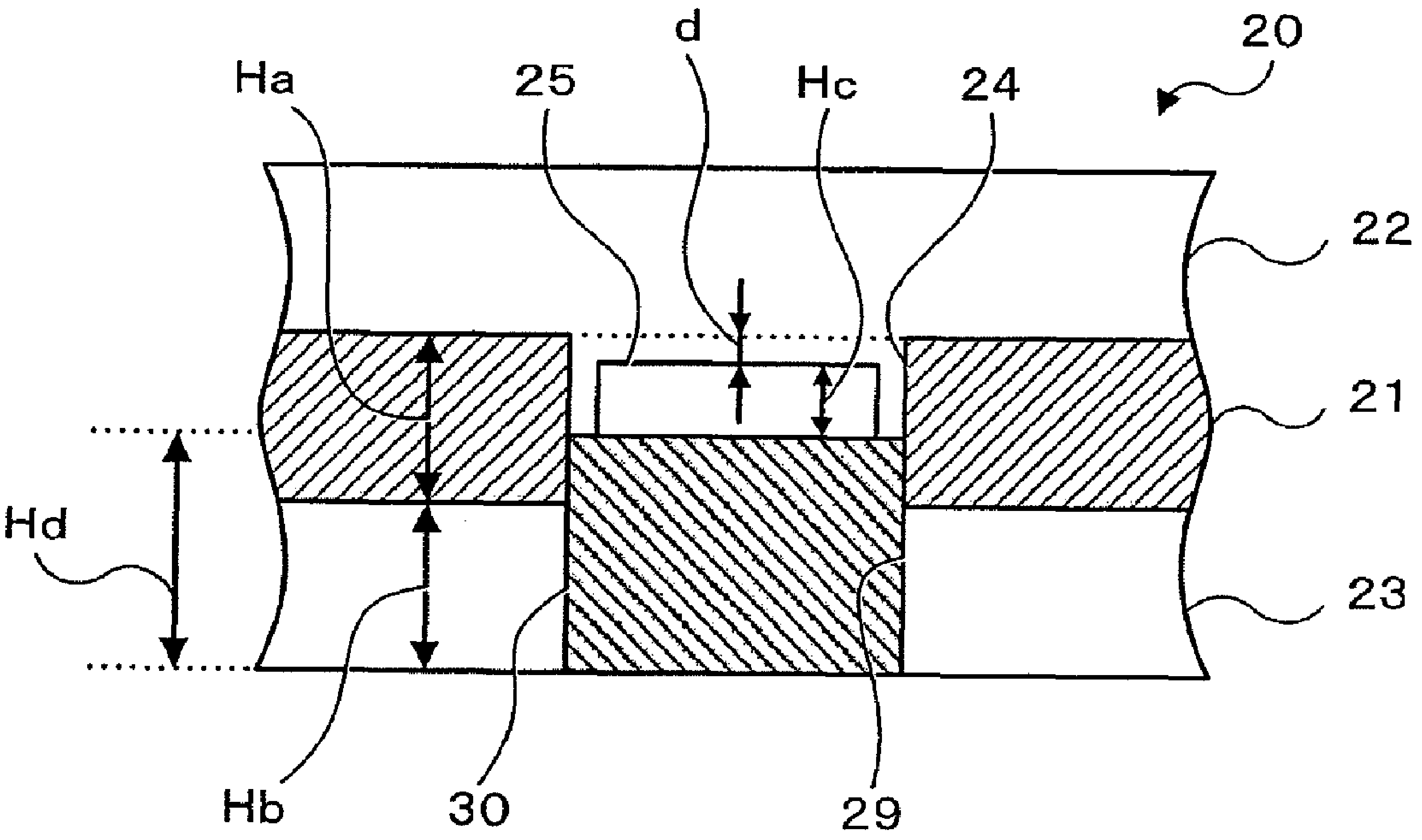

FIG. 3B

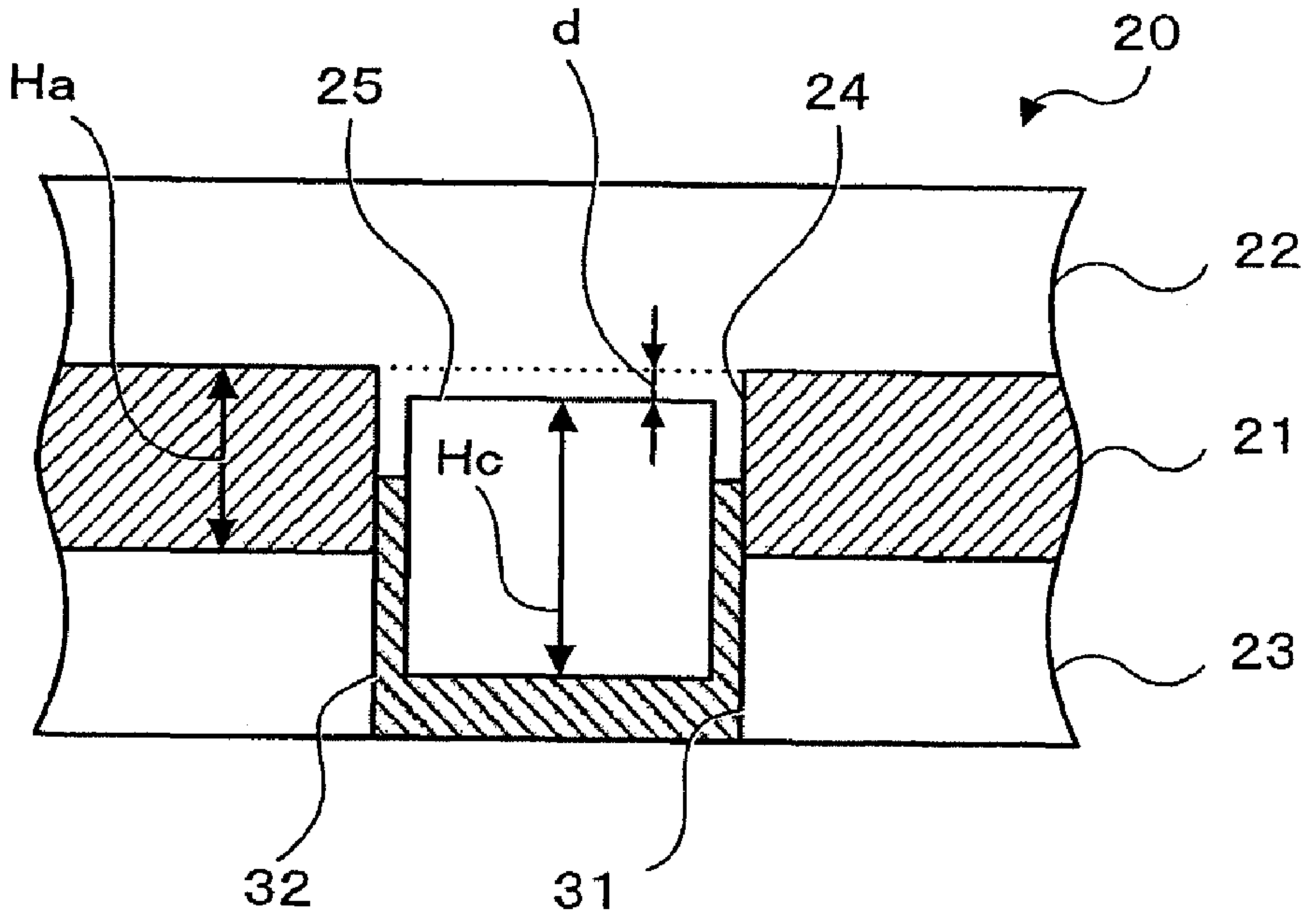

FIG. 4A

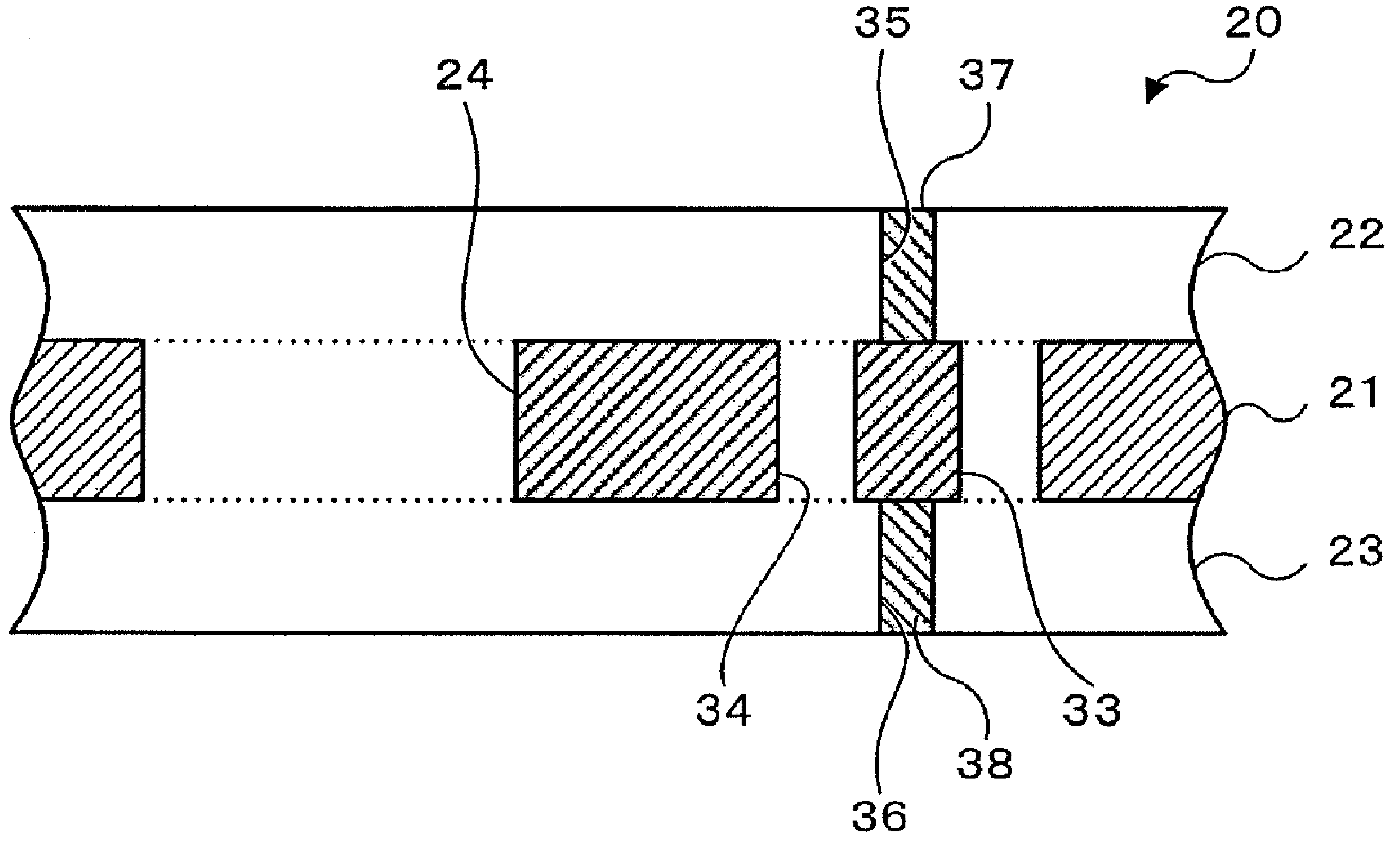

FIG. 4B

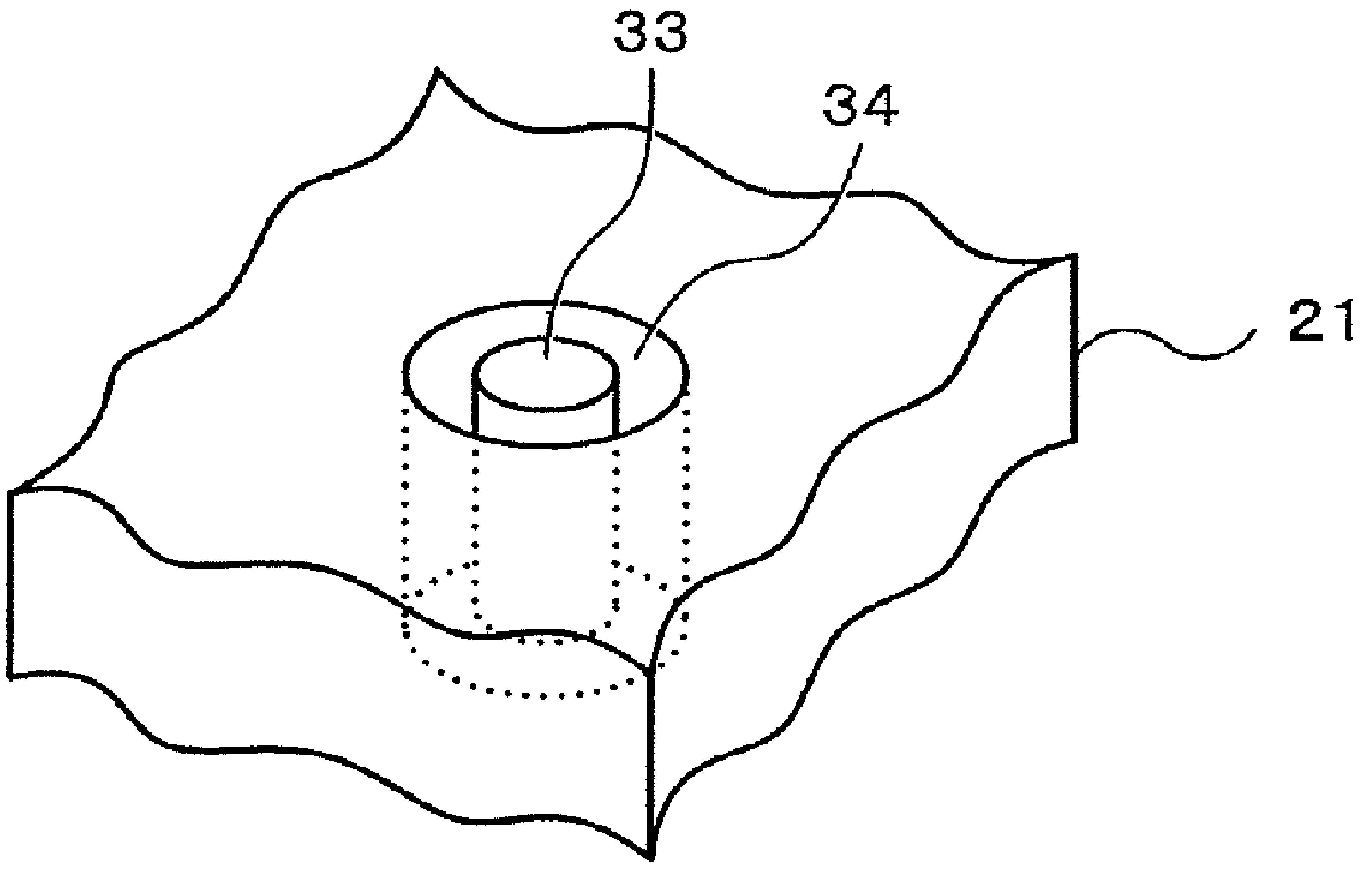

FIG. 5

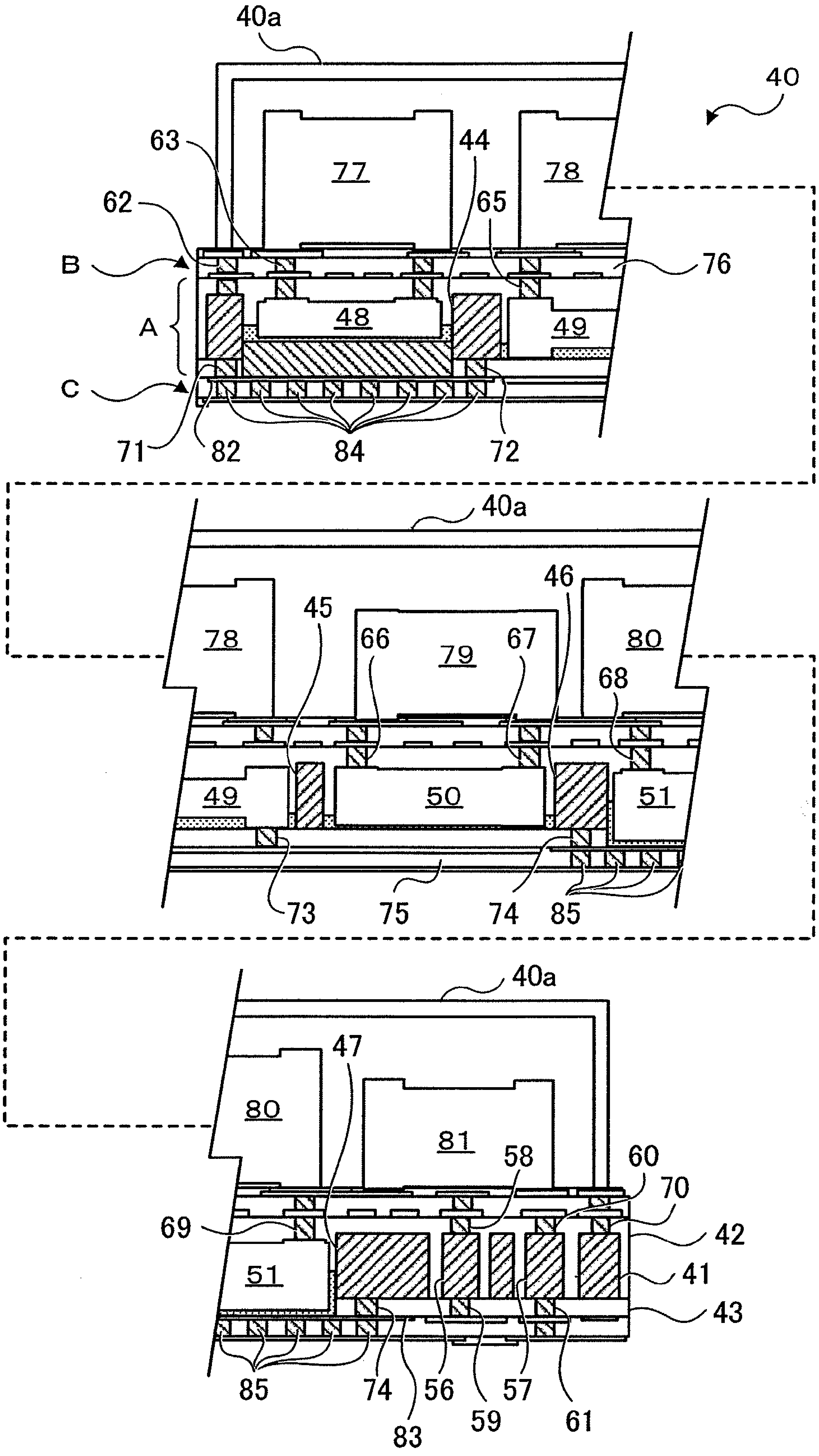
40a
40
63
44
77
78
62
65
B
76
A
48
49
C
71
82
84
72
40a
46
45
78
66
79
67
80
68
49
50
51
73
75
74
85
40a
47
80
81
58
60
70
69
42
51
41
43
85
74
56
57
83
59
61

FIG. 6A

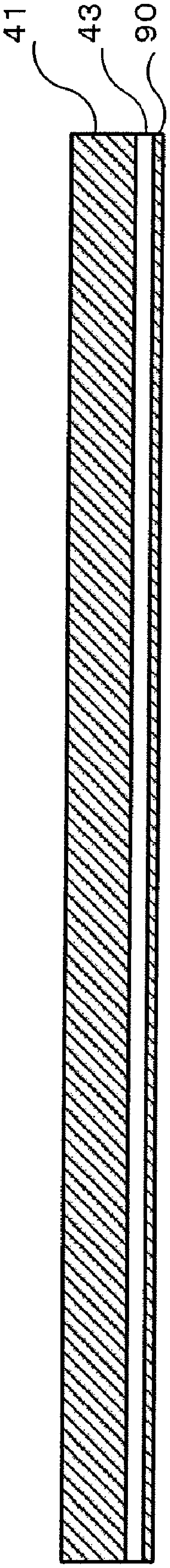

FIG. 6B

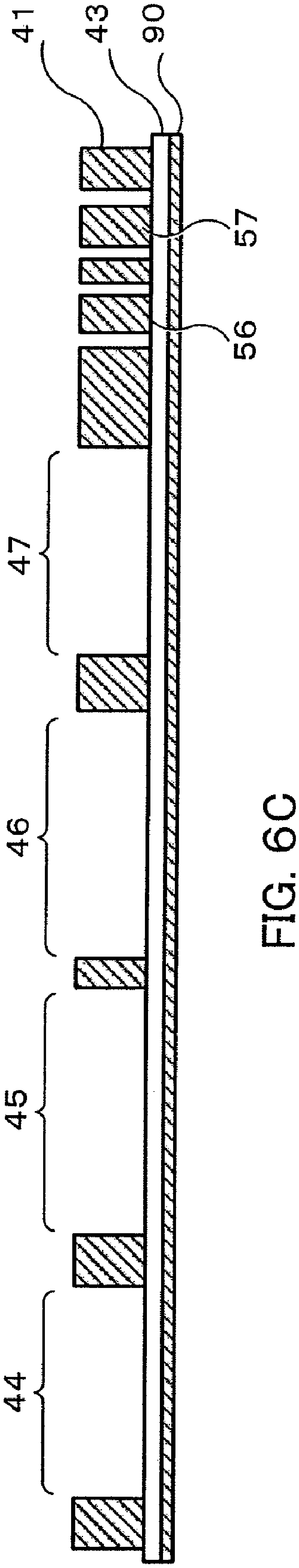

FIG. 6C

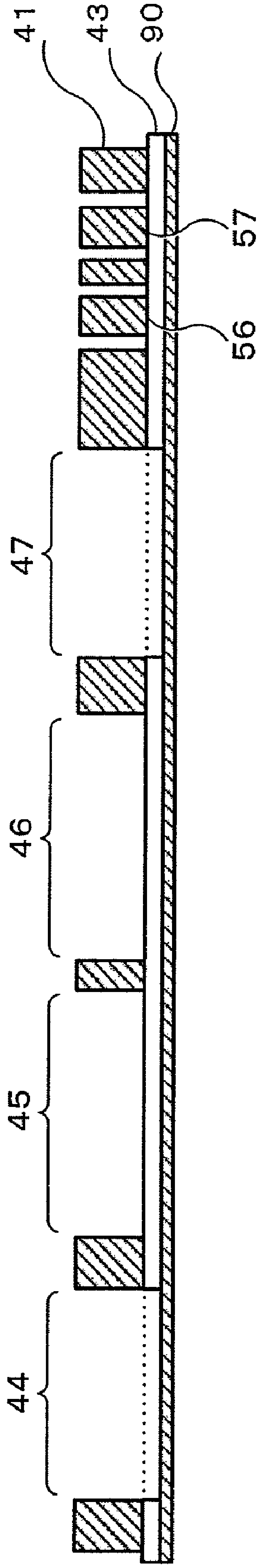

FIG. 7A

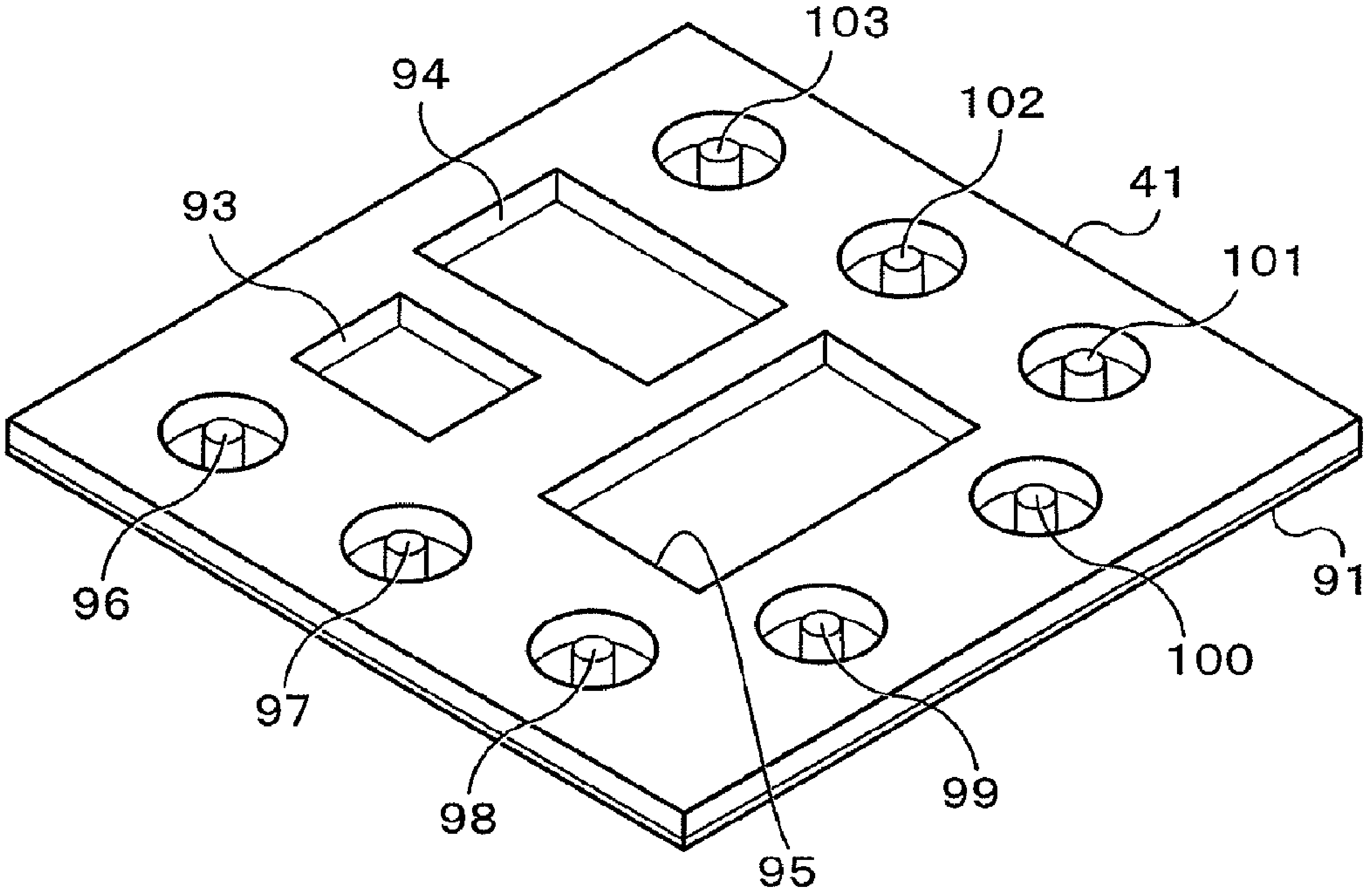

FIG. 7B

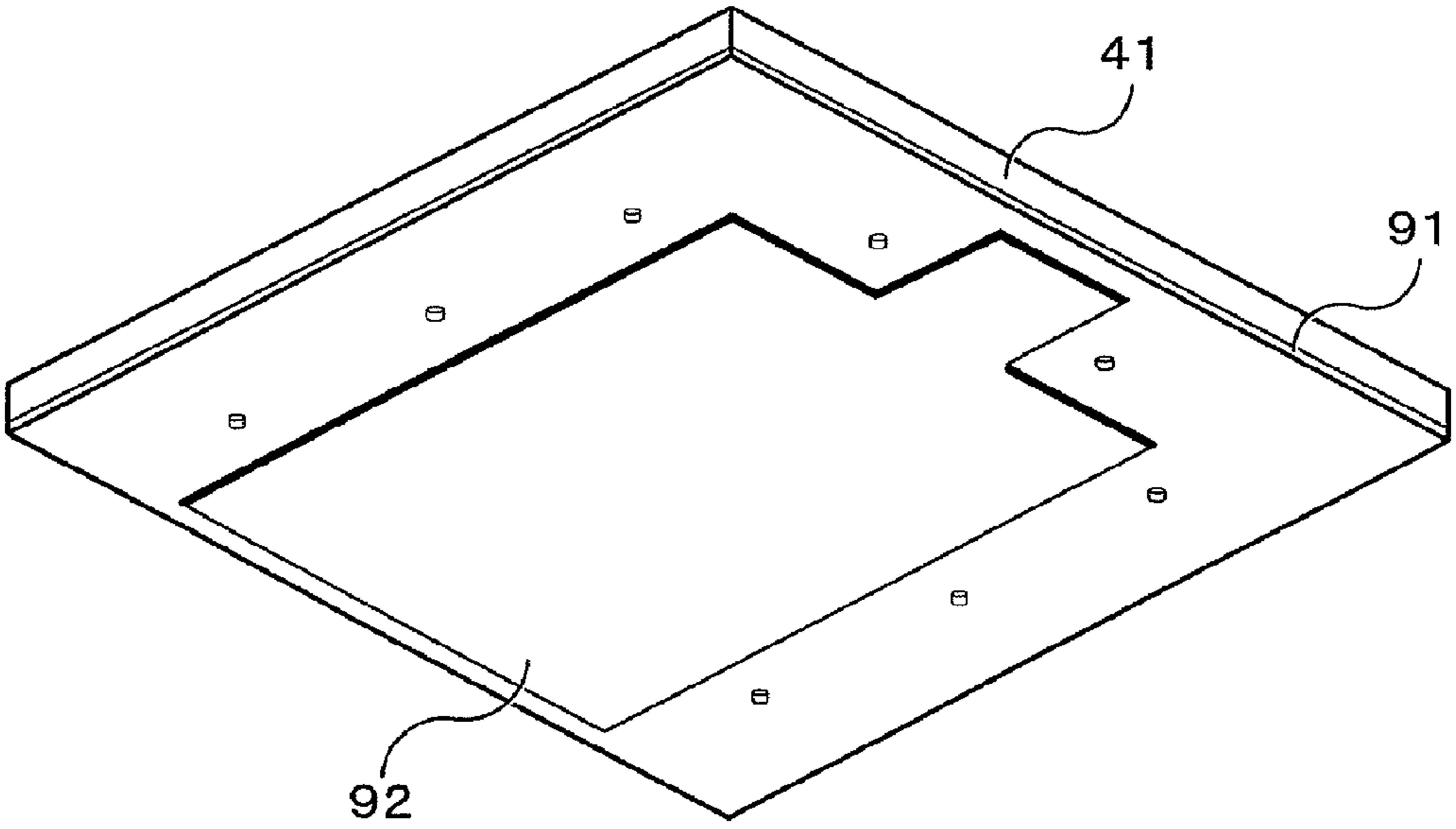

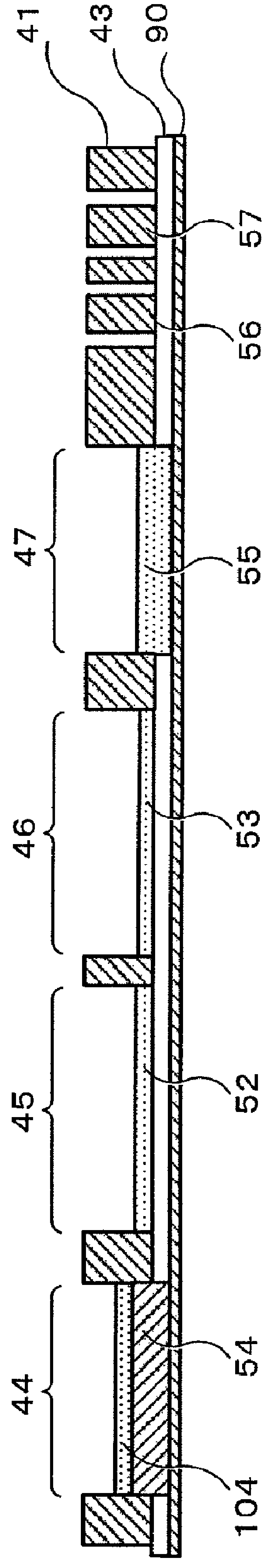

FIG. 8A

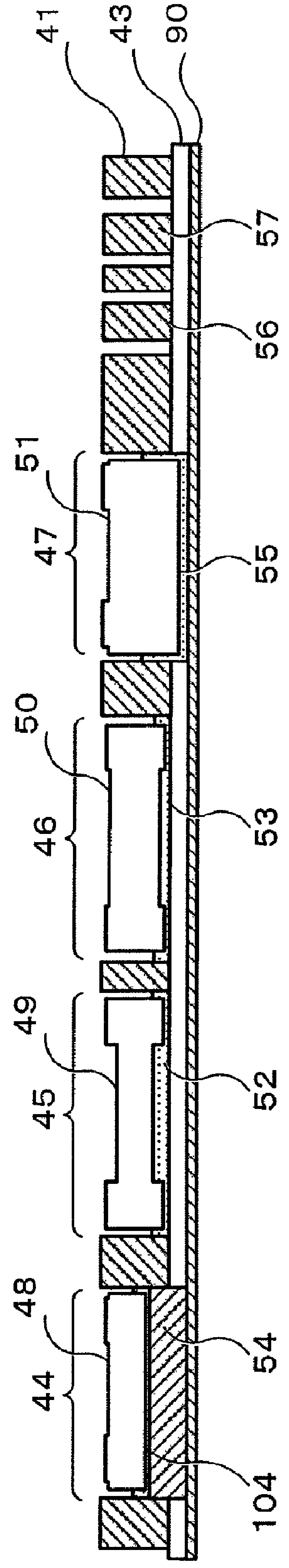

FIG. 8B

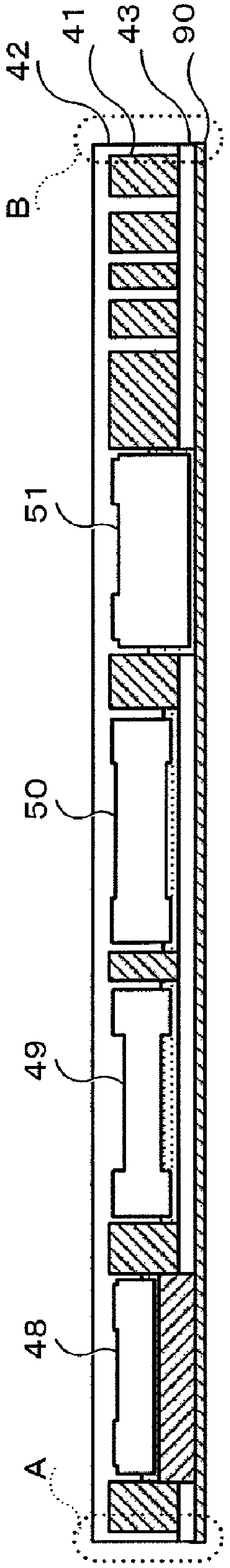

FIG. 8C

FIG. 9A

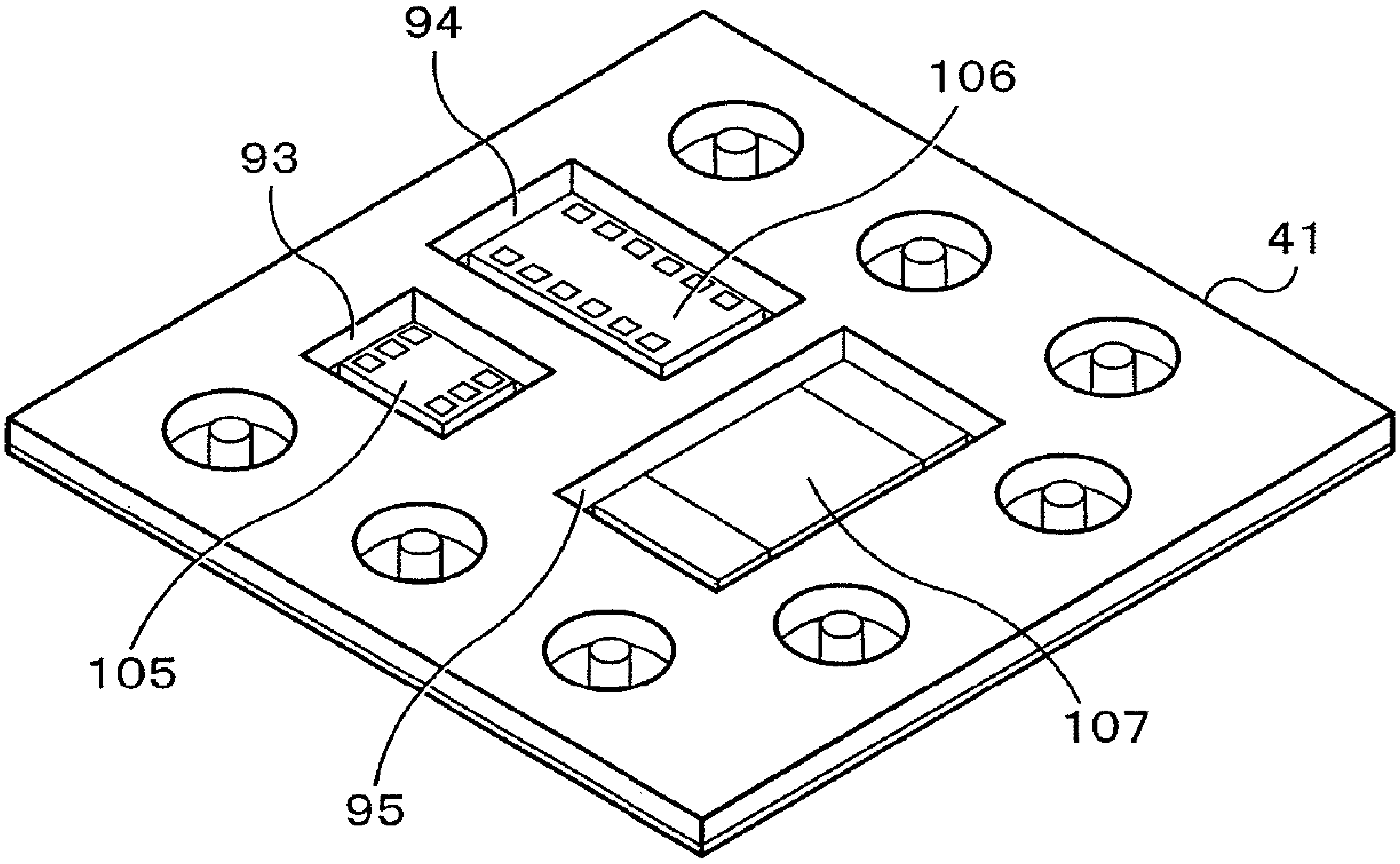

FIG. 9B

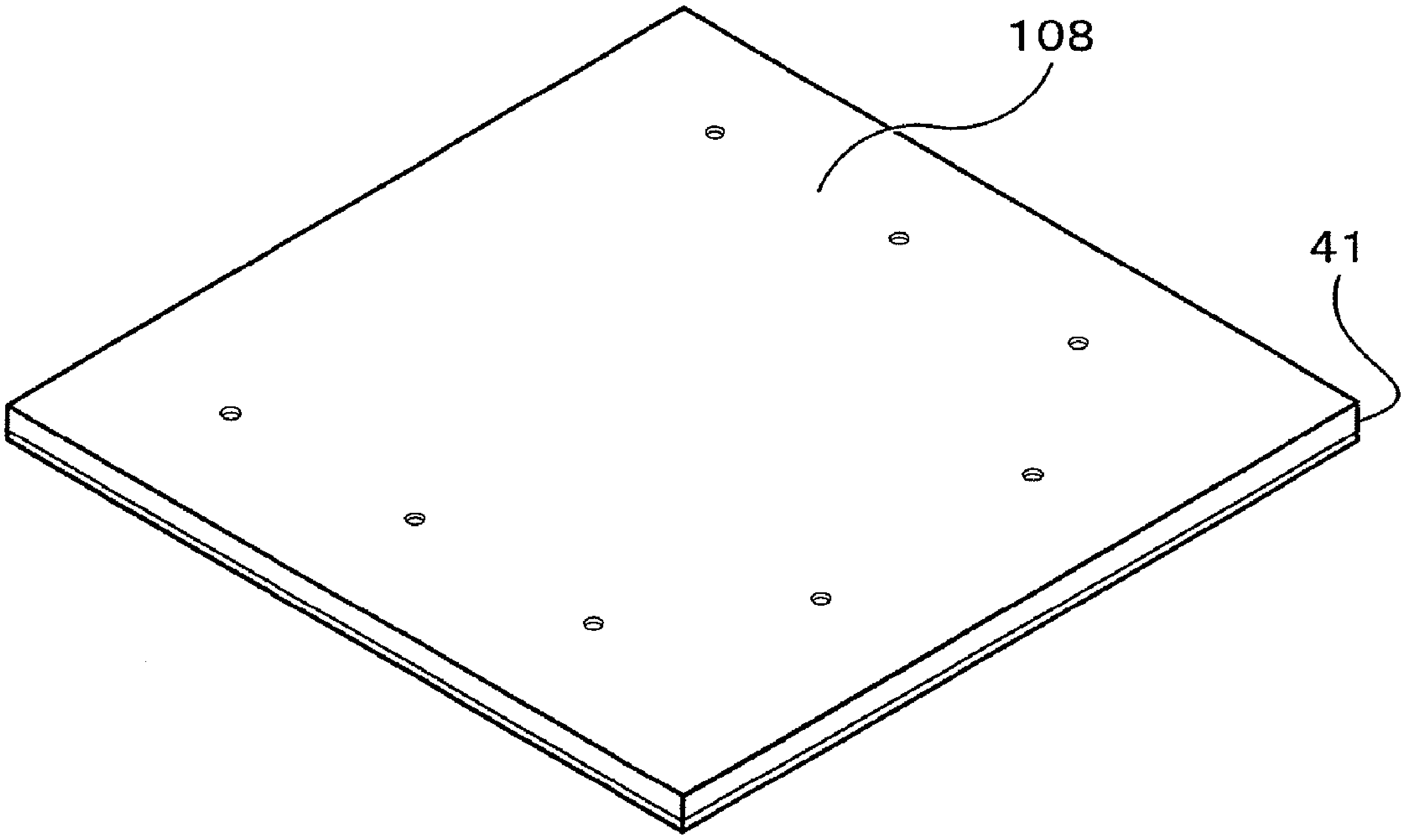

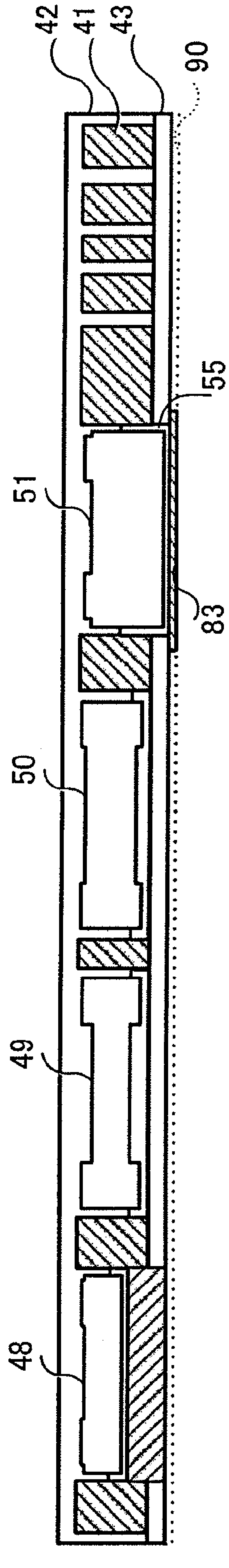

FIG. 10A

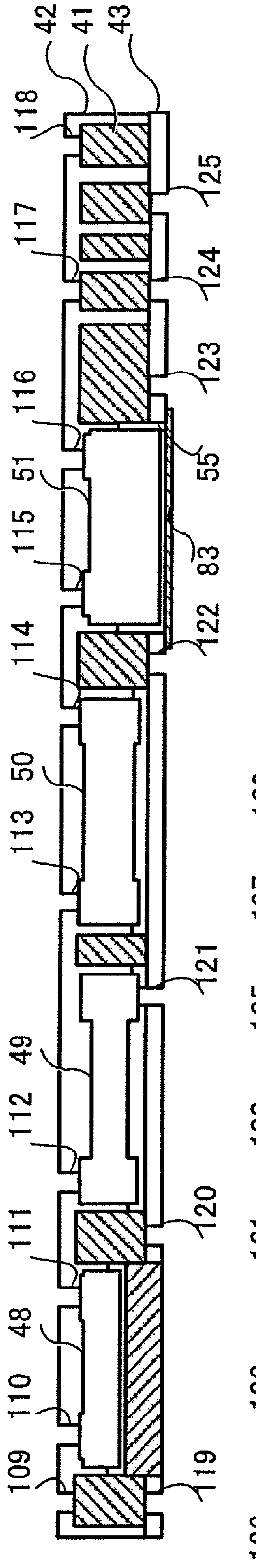

FIG. 10B

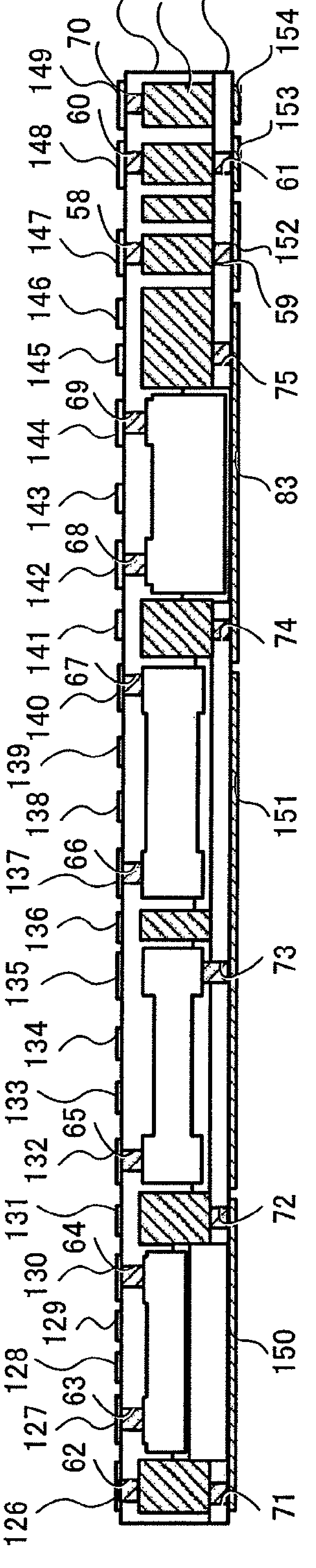

FIG. 10C

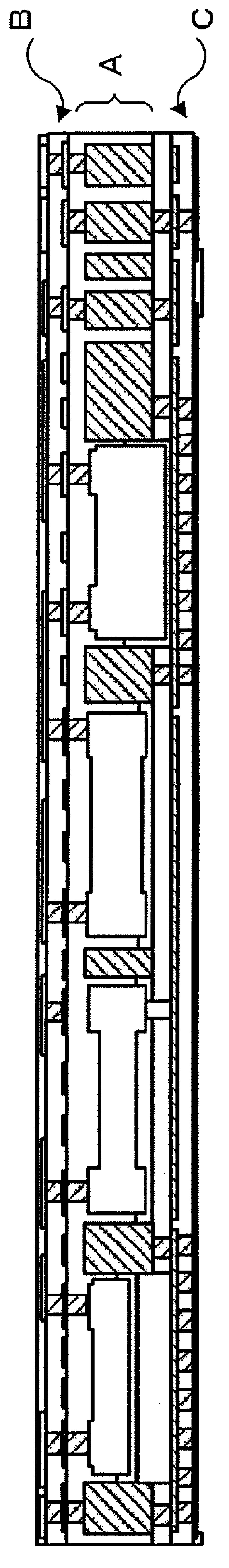

FIG. 10D

FIG. 11A

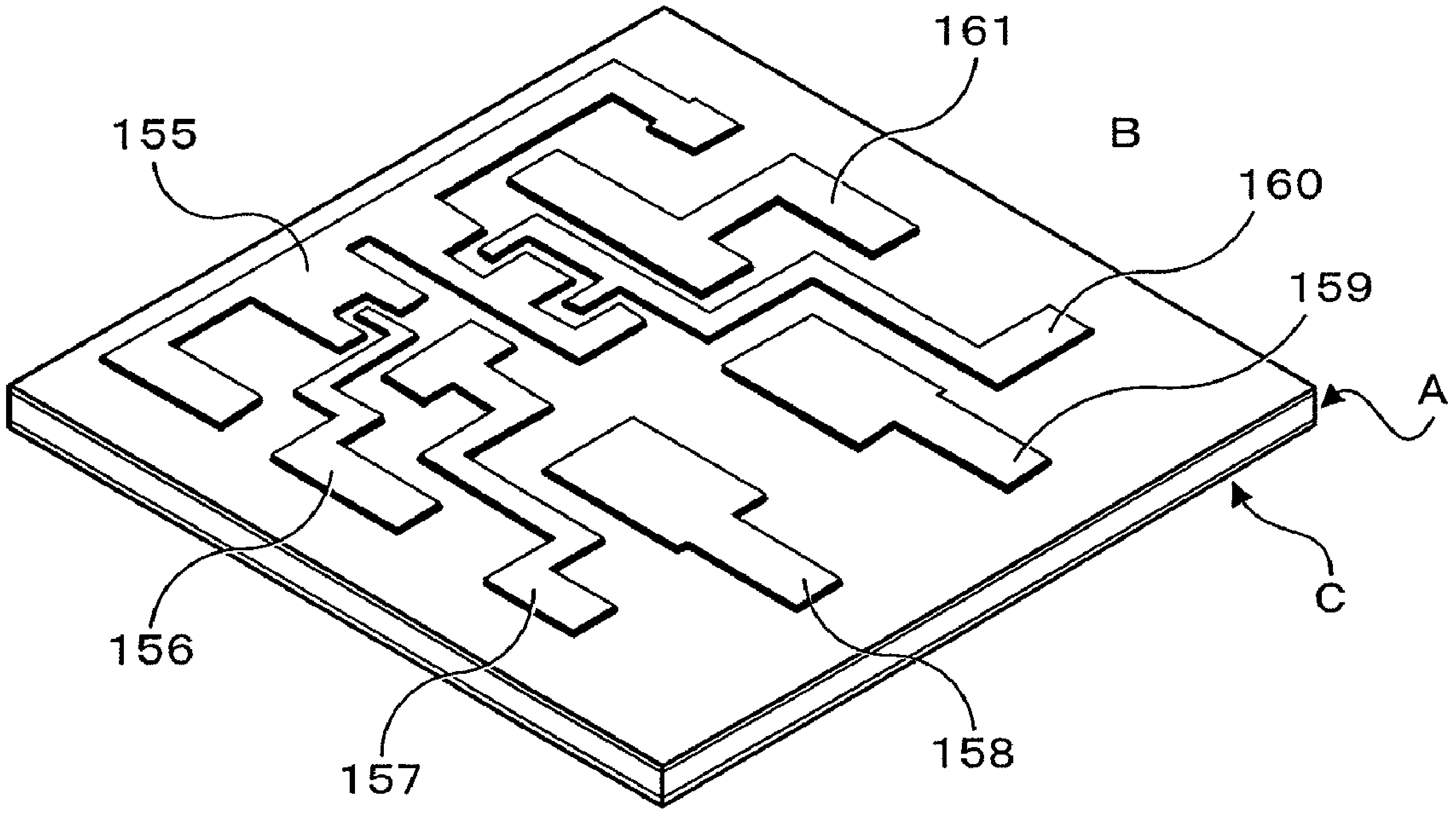

FIG. 11B

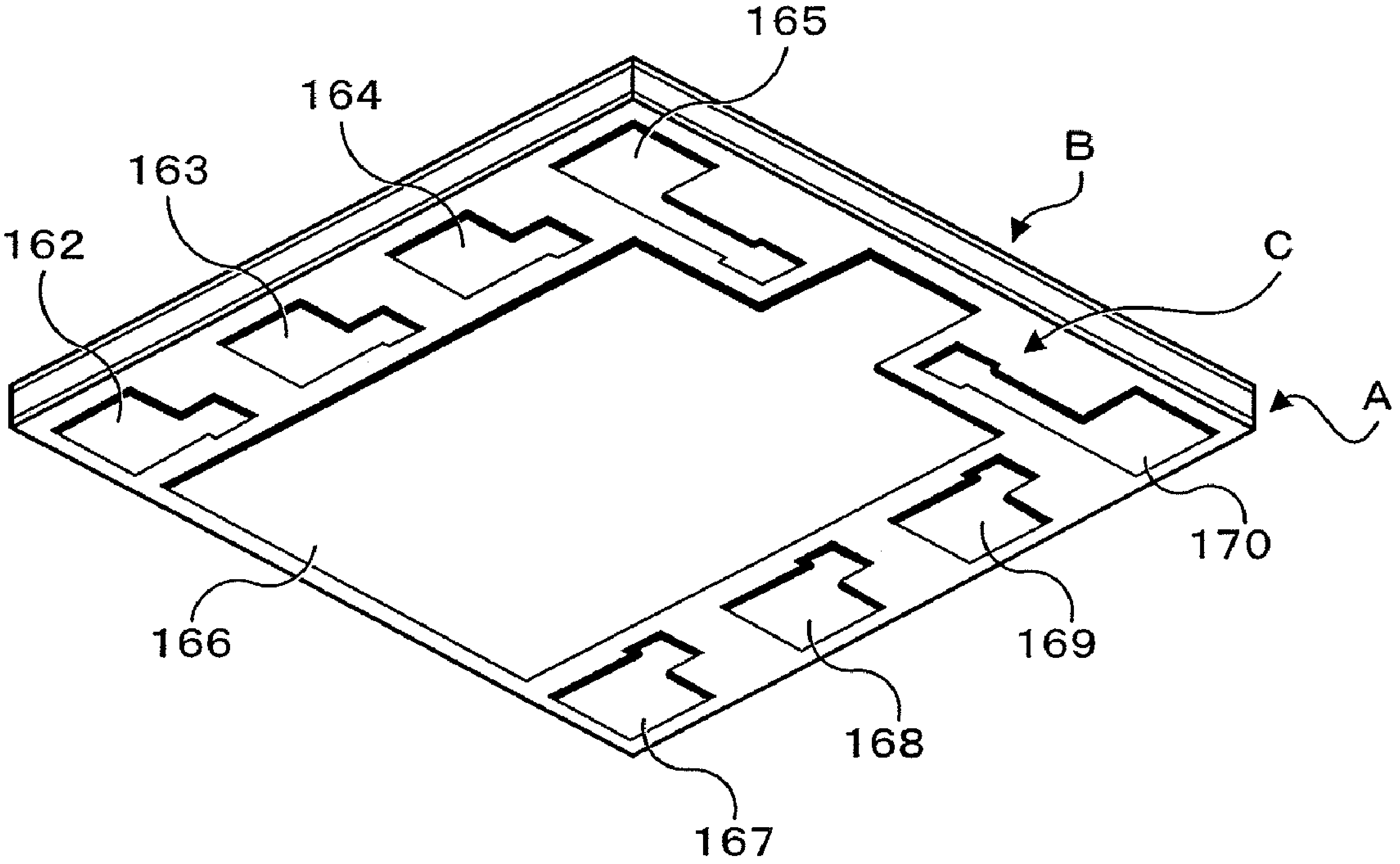

FIG. 12A

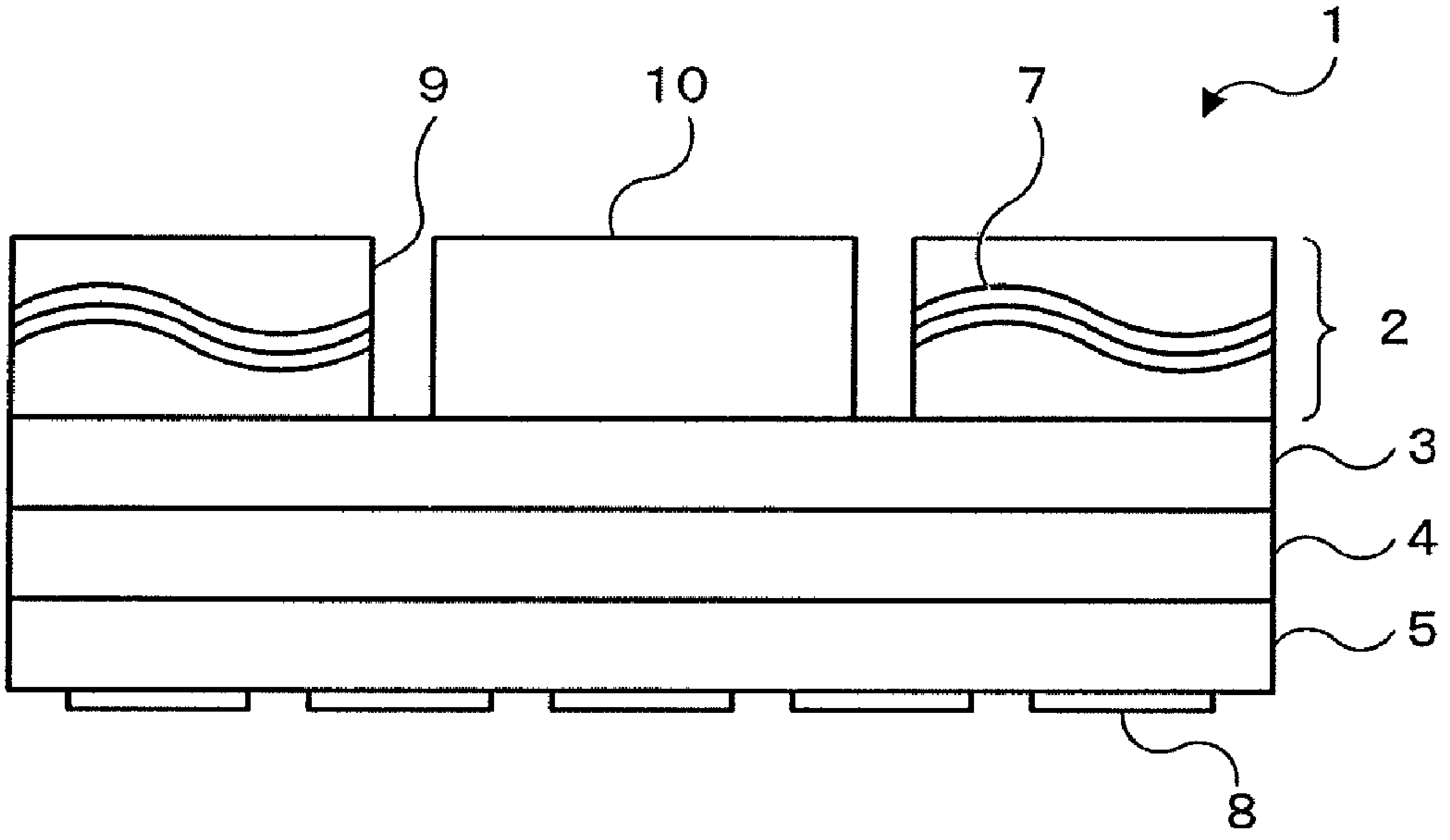

FIG. 12B

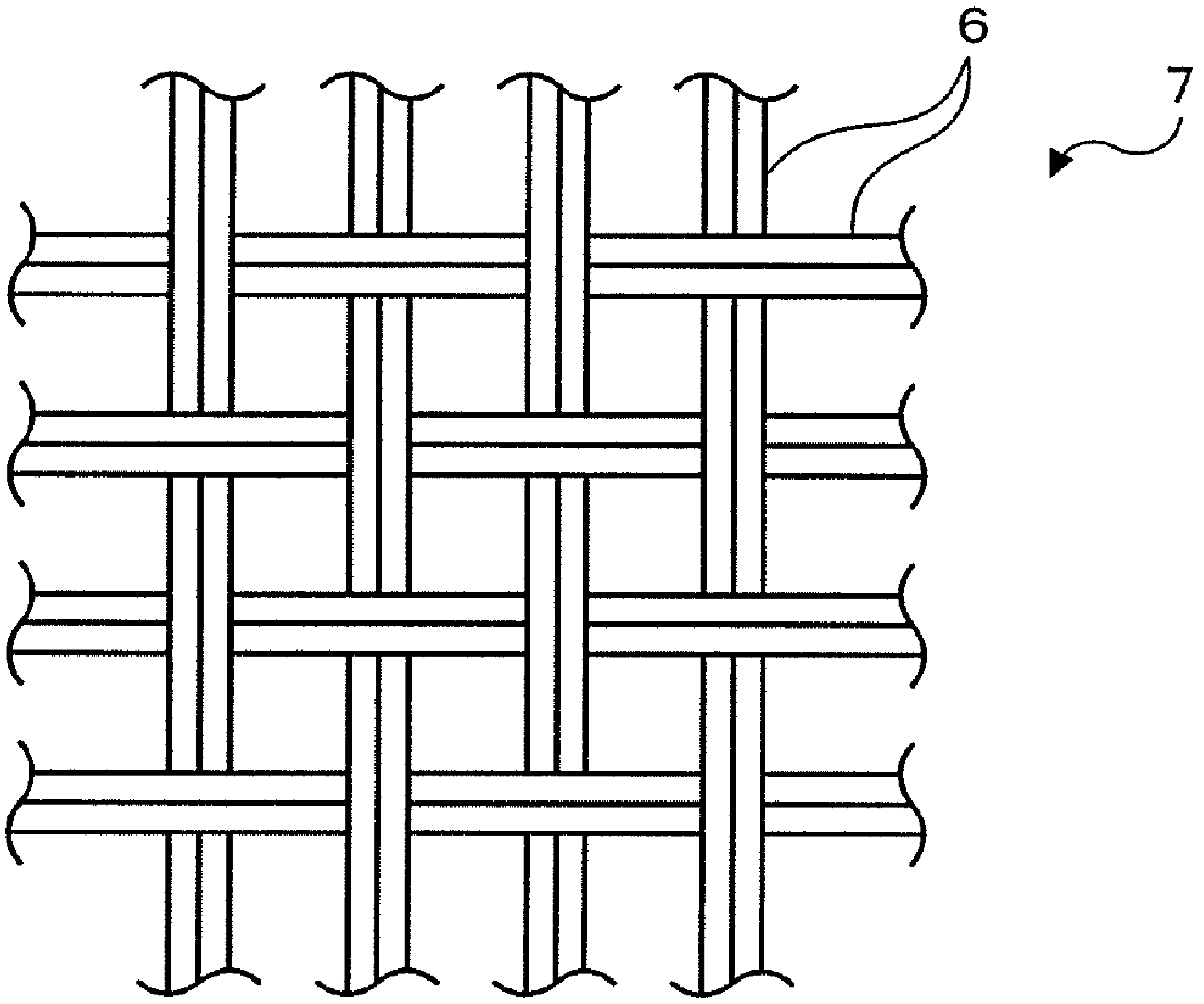

COMPOSITE MULTI-LAYER SUBSTRATE AND MODULE USING THE SUBSTRATE

Matter enclosed in heavy brackets [ ] appears in the original patent but forms no part of this reissue specification; matter printed in italics indicates the additions made by reissue.

REFERENCE TO RELATED APPLICATIONS

The present application is a continuation of and claims the benefit of the filing date of U.S. patent application Ser. No. 11/896,013, filed Aug. 29, 2007 now U.S. Pat. No. 7,745,926, which is a continuation of U.S. patent application Ser. No. 10/515,953, filed Jul. 25, 2005 now U.S. Pat. No. 7,348,662, which in turn claims priority to International Patent Application No. PCT/JP03/06597, which was filed May 27, 2003, which in turn claims priority to Japanese Patent Application No. 2002-156796 filed May 30, 2002, the entire disclosures of which are incorporated by reference herein.

BACKGROUND OF THE INVENTION

1. Field of the Invention

This invention relates to a composite multi-layer substrate and module using a substrate designed to make high density mounting of electronic components feasible.

2. Description of the Prior Art

Conventionally, package miniaturization has been vigorously carried out as the approach for high density mounting of electronic components. For example, recently the Chip Size Package (CSP) and ultimately bare chip mounting which makes the package itself redundant have been realized. However, each of these is premised on arranging and mounting (flat surface mounting method) a plurality of electronic components in a two-dimensional (surface) array. By simple calculation, the fundamental limitation of not being able to reduce the mounting surface areas to less than the size of the added area of each electronic component is retained.

Therefore, a mounting method using embedded mounting of the electronic components in a substrate (more specifically, not only the substrate face) but also the inner section of the substrate attracts attention.

Hereafter, widely known technologies of embedded mounting and their associated drawbacks will be explained.

As an electronic component embedded structure using an organic system substrate, the electronic components are mounted in the front surface of the organic substrate serving as the core (hereinafter "core substrate"). In the case of multi-layering, a structure which encapsulates electronic components in a dielectric (nonconductive) prepreg resin is known (hereinafter "first prior art example"). Furthermore, a structure in which grooves are formed in an organic system substrate wherein electronic components are embedded is known (hereinafter "second prior art example").

Furthermore, as for mounting electronic components on the front surface of a core substrate, a structure (hereinafter "third prior art example") in which holes corresponding to the size of electronic components are drilled in the prepreg and the electronic components are inserted and embedded in the holes of the prepreg when multi-layering or a structure (hereinafter "fourth prior art example") with embedded sintered components by transfer in organic resin are known.

However, the first prior art example and the fourth prior art example have a drawback of being disadvantageous to thin-sizing the substrate. Also, in the second prior art example and the third prior art example, there is a drawback mentioned which involves the processing cost of the grooves or holes. Moreover, because electronic component heat dissipation countermeasures are not entirely taken into consideration, any of the prior art examples (first through fourth prior art examples) have a drawback causing inconvenience in mounting electronic components especially in regard to heat generation in larger semiconductor chips, etc.

Japanese Laid-Open Patent Application (Kokai) (A) No. S54-008871 (1979) titled "SEMICONDUCTOR DEVICE" discloses that in order to provide a solid electronic clock that is thin-shaped and a small size, while forming a pattern in one side of a printed circuit board, the device is made of a printed circuit board and a semiconductor chip of almost the equivalent thickness by adhering a metal plate to the rear surface, forming a "hole" in one or both directions in the pattern or metal plate and mounting a semiconductor chip in the hole. However, by this prior art example, when performing a resin seal of the semiconductor chip and multi-layering, there is a drawback of having to grind off the excess resin requiring additional work and making manufacturing costs more expensive. Additionally, concerning mounting in a hole and electronic component having multiple electrodes, such as the five-sided electrode, etc., there is a drawback that the type of electronic component which can be mounted has limitations and this constitution was not taken into consideration at all.

Japanese Laid-Open Patent Application (Kokai) (A) No. S61-287194 (1986) titled "CHIP CARRIER FOR USE IN ELECTRONIC DEVICES" discloses elevation of the heat dissipation effect in electronic components. An insulating resin is laminated on a metal core front surface of a printed circuit board with a metal core base. While forming "concave portions" which reach to the metal core of that insulating resin, the device uses the metal core as a heat sink by mounting in the concave portions in order for the rear surface of an electronic component to be in contact to the metal core. This prior art example describes concave portions that are formed so the insulating resin laminated to the metal core rear surface (opposite side of the mounting surface of the electronic components) also reaches the metal core and the heat dissipation effect is elevated.

Japanese Laid-Open Patent Application (Kokai) (A) No. S64-011400 (1989) titled "MULTILAYERED PLATE FOR MOUNTING IC CHIP" discloses a means to dissipate the heat of semiconductor chips from adjacent positions and to provide a multi-layer substrate for mounting semiconductor chips without generating improper bonding with the metal plate for heat dissipation by way of "holes" for semiconductor chip mounting formed in metal foil or a metal sheet. A printed circuit board is used in which the wiring network containing the above-mentioned holes are formed in one side or both sides of a metal base copper clad laminate in which prepreg or copper foil is superimposed. However, in this prior art example, the relationship between the metal foil in the side walls of the holes for mounting semiconductor chips or the height of the metal sheet and the thickness of the semiconductor chips is not defined. In addition, the configuration having taken into consideration heat dissipation of the semiconductor chips is not defined. Further, from the depth relationship of the holes for mounting semiconductor chips and the thickness of the semiconductor chips not being clear, consideration of thin-sizing is regarded to be insufficient. Also, from having to remove the glass cloth (described later) when the holes for mounting semiconductor chips in a printed circuit board are formed, the increased manufacturing cost is readily anticipated.

Japanese Laid-Open Patent Application (Kokai) (A) No. S64-012598 (1989) titled "IC CHIP MOUNTING MULTI-LAYER BOARD" discloses the use of a metal sheet with a thickness of 0.1-1.0 mm, preferably 0.2-0.5 mm, and with a thermal expansion coefficient of not more than 9×10^{-6} cm/cm/° C. Although performing surface treatment suitably and improving the adhesive property is mentioned, these can also be considered similar problems (namely, consideration of thin-shaping is insufficient and increased manufacturing cost) relative to the seventh prior art example.

Japanese Laid-Open Patent Application (Kokai) (A) No. H02-122534 (1990) titled "HYBRID INTEGRATED CIRCUIT" discloses a means to provide a hybrid integrated circuit in which high current can flow and miniaturized high density mounting is made possible. The wiring pattern is formed with "openings" for mounting semiconductor chips in a thermoplastic resin plate, and further consists of semiconductor chips and a metal plate of the same thickness arranged on either side of the semiconductor chips. Also, the thermoplastic resin plate in which the wiring layer is formed in a multi-layer is united with another thermoplastic resin plate by means of thermocompression bonding. The lead terminals of the semiconductor chips are inserted in the openings provided between the thermoplastic resin plates formed in the multi-layer wiring layer and electrically connects with the wiring layer. However, in this prior art example, the measures relative to heat dissipation of the semiconductor chips are not clear. Also, the resin seal around the circumference of the semiconductor chips is problematic from thermocompression bonding with the thermoplastic resin plates in which the openings are formed and the thermoplastic resin plates with which the multi-layer wiring layer is formed. When thermocompression bonding is performed in the state of fusing the thermoplastic resin plates, fluctuation of the thickness between layers of the section which forms the multi-layer wiring layer can be anticipated, and electrical specification control can be presumed to be difficult.

Japanese Laid-Open Patent Application (Kokai) (A) No. 2002-111226 titled "COMPOSITE MULTILAYER BOARD AND MODULE FOR USING IT" disclosure is explained below.

FIG. **12**A is a cross sectional plan view of the composite multi-layer substrate described in the official gazette. This composite multi-layer substrate **1** has a stacked multi-layer structure of a plurality of layers. The illustrated example has four layers (described later "resin layers") **2**-**5** which are composed of resin material. These resin layers **2**-**5** are common in that all use resin materials, such as epoxy, etc., for the material (so-called glass cloth **7**) and only the layer of the resin layer **2** (drawing top layer) is different in the respect that a glass fiber **6** is contained within the braided (knitted) shape of a net as shown in FIG. **12**B. The glass cloth **7** is reinforcement for enhancing the physical strength of the composite multi-layer substrate **1**. For convenience of explanation hereinafter, while the resin layer **2** which "has" the glass cloth **7** is denoted as "glass cloth layer **2**," the resin layers **3**-**5** which "do not have" the glass cloth **7** are denoted as "glass clothless layers **3**-**5**."

Further, this composite multi-layer substrate **1** is bonded to copper foil on the bottommost surface (underside of the glass clothless layer **5**) as the mounting side. The conductor pattern of copper foil is created by etching techniques, and the conductor pattern **8** of the required shape is formed. Also, some of the glass cloth layer **2** is eliminated wherein a concavity **9** (It is called a mold cavity whereas an opening is generally closed.) is formed and the electronic components **10** (for example, semiconductor chips) are mounted in the concavity **9**.

The electronic components **10** "are embedded" by using the inner section of the composite multi-layer substrate **1**. Accordingly, other components can be mounted to the composite multi-layer substrate **1** front surface along with components mounted in higher density.

However, since the invention described in the above-mentioned official gazette (tenth prior art example) uses the glass cloth **7** as reinforcement for enhancing the physical strength of the composite multi-layer substrate **1**:

There is a problem of ion migration occurring relative to the interface of the glass fiber **6** and the resin (the main material of the glass cloth layer **2**), whereby the insulation becomes destroyed depending on the intensity of the electrolysis and resultant deterioration in the electrical properties.

In order to form the concavity **9** for the mold cavity, it is necessary to physically remove some of the resin layer **2**. In that case, the glass fiber **6** within the resin layer **2** must be severed. Although such a cutting operation commonly uses precision processing machines, such as laser, etc., truncation errors are undeniable and considerable production time is also required. Moreover, when a plurality of the concavity **9** is required, there is a problem that the production time proportionately increases which incurs higher manufacturing costs.

Therefore, the present invention's purpose is to prevent deterioration of the electrical characteristic accompanying the generation of migration and aiming at reduction of the manufacturing cost by using other reinforcement as a substitute for the glass cloth.

SUMMARY OF THE INVENTION

The present invention has been made in view of the conventional prior art drawbacks mentioned above. In accordance an aspect of the present invention in claim **1**, there is provided a composite multi-layer substrate comprising a flat plate-like core member formed of a material having excellent electric conductivity, heat conductivity and high rigidity properties; a front side resin layer covering a front surface of said core member; a rear side resin layer covering a rear surface of said core member; a bottomless hole formed in said core member and said rear side resin layer penetrating a front and rear of said core member and a front and rear of said rear side resin layer; an electronic component mounted in said bottomless hole, the thickness of the electronic component being equal to or larger than the thickness of said core member; a height size adjustment member interposed among said electronic component and said core member and said rear side resin layer; and a column segment which divides said core member and penetrates said front and rear surfaces in a thickness direction of said core member; wherein said column segment is adapted to providing an electrical signal transmission path or a power supply voltage transmission path to the front and rear surfaces of said substrate.

In accordance with another aspect of the present invention in claim **2**, there is provided a composite multi-layer substrate comprising a flat plate-like core member formed of a material having excellent electric conductivity, heat conductivity and high rigidity properties; a front side resin layer covering a front surface of said core member; a rear side resin layer covering a rear surface of said core member; a flat bottomed hole formed in an opening of either one of said front surface of said core member or said rear surface of said core member; an electronic component mounted in said flat bottomed hole, the thickness of the electronic component being equal to or larger than the thickness of said core member; a height size adjustment member interposed among said electronic component and said core member and said rear side resin layer; and a column segment which divides said core member and penetrates said front and rear surfaces in a thickness direction of said core member; wherein said column segment is adapted to providing an electrical signal transmission path or a power supply voltage transmission path to the front and rear surfaces of said substrate.

Here, the present invention is not limited in particular.

What is essential is just to have a combination of the three above-stated properties: "material which has excellent electrical conductivity, excellent heat conductivity and high rigidity."

According to the present invention, as the core member consists of "material which has excellent electrical conductivity, excellent heat conductivity and high rigidity," typically, a core member made from metal (metallic) is preferred, but copper, Alloy 42, Invar, etc. are particularly preferred.

Additionally, though each "bottomless hole" and "bottomed hole" are used to mount an electronic component (an electronic component is a general term of a passive component part, such as a semiconductor chip, a transistor, a resistance element, a capacitative element, an inductance element or other electronic components), the first is different in terms of a "a hole without a bottom (or a through hole)" and the latter "a hole with a bottom (or a concave portion)". Also, the opening shape of a "bottomless hole" and a "bottomed hole" should just have an appropriate shape (for example, a little higher shape than the outside of the electronic component) which can conveniently mount a target electronic component.

In a composite multi-layer substrate which has these characteristics, in order to have a core member which has rigidity, it is not necessary to use glass cloth as a reinforcing material. Therefore, various kinds of inconveniences (namely, aggravation of electrical properties by an accompanying generation of ion migration and the increased manufacturing cost accompanying the glass cloth cutting process) which accompany glass cloth are avoided.

In accordance with another aspect of the present invention in claim **3**, there is provided a composite multi-layer substrate comprising a flat plate-like core member formed of a material having excellent electric conductivity, heat conductivity and high rigidity properties; a front side resin layer covering a front surface of said core member; a rear side resin layer covering a rear surface of said core member; a bottomless hole formed in said core member and said rear side resin layer penetrating a front and rear of said core member and a front and rear of said rear side resin layer; an electronic component mounted in said bottomless hole, the thickness of the electronic component being equal to or larger than the thickness of said core member; and a height size adjustment member interposed among said electronic component and said core member and said rear side resin layer; wherein said height size adjustment member is interposed between the bottom of said electronic component when said electronic component height size is lower than the depth size of said core member mounted in said bottomless hole, wherein said height size adjustment member is adapted to adjusting a height of said electronic component.

In accordance with another aspect of the present invention in claim **4**, there is provided a composite multi-layer substrate comprising a flat plate-like core member formed of a material having excellent electric conductivity, heat conductivity and high rigidity properties; a front side resin layer covering a front surface of said core member; a rear side resin layer covering a rear surface of said core member; a bottomless hole formed in said core member and said rear side resin layer penetrating a front and rear of said core member and a front and rear of said rear side resin layer; an electronic component mounted in said bottomless hole, the thickness of the electronic component being equal to or larger than the thickness of said core member; and a height size adjustment member interposed among said electronic component and said core member and said rear side resin layer; and wherein said core member is patterned by applying a subtractive process.

In accordance with another aspect of the present invention in claim **5**, there is provided a composite multi-layer substrate comprising a flat plate-like core member formed of a material having excellent electric conductivity, heat conductivity and high rigidity properties; a front side resin layer covering a front surface of said core member; a rear side resin layer covering a rear surface of said core member; a flat bottomed hole formed in an opening of either one of said front surface of said core member or said rear surface of said core member; an electronic component mounted in said flat bottomed hole, the thickness of the electronic component being equal to or larger than the thickness of said core member; and a height size adjustment member interposed among said electronic component and said core member and said rear side resin layer; wherein said core member is patterned by applying a subtractive process.

The above and further objects and novel features of the present invention will more fully appear from the following detailed description when the same is read in conjunction with the accompanying drawings. It is to be expressly understood, however, that the drawings are for the purpose of illustration only and are not intended as a definition of the limits of the invention.

BRIEF DESCRIPTION OF THE DRAWINGS

FIGS. **1A**-**1C** are main cross sectional plan views and a main perspective view of a composite multi-layer substrate in the embodiment;

FIGS. **2A** and **2B** are composition diagrams when mounting an electronic component **25** in a bottomless hole **24** of the core member **21**;

FIGS. **3A** and **3B** are composition diagrams when mounting an electronic component **25** in a bottomless hole **24** of the core member **21**;

FIGS. **4A** and **4B** is a main cross sectional plan view in another section of the core member **21** and an external perspective view of the section;

FIG. **5** is a cross sectional plan view of a module **40** applied to the present invention;

FIGS. **6A**-**6C** are manufacturing process diagrams (first through third processes) of a module **40**;

FIGS. **7A** and **7B** are outline views after the third process;

FIGS. **8A**-**8C** are manufacturing process diagrams (fourth through sixth process) of a module **40**;

FIGS. **9A** and **9B** are outline views after the fifth and sixth processes;

FIGS. **10A**-**10D** are manufacturing process diagrams (seventh through tenth processes) of a module **40**;

FIGS. **11A** and **11B** are outline views after the tenth process; and

FIGS. **12A** and **12B** show a cross sectional plan view of a conventional prior art composite multi-layer substrate and an enlarged plan view of the glass cloth.

DETAILED DESCRIPTION OF THE PREFERRED EMBODIMENTS

Hereinafter, the embodiments of the present invention will be explained with reference to the drawings.

FIGS. **1**A-**1**C are main cross sectional plan views and a main perspective view of a composite multi-layer substrate in the form of the embodiment. In this cross sectional view, the composite multi-layer substrate **20** has a "multi-layer structure." Referring to the example illustration, the composite multi-layer substrate **20** has a three-layer structure comprising a core member **21**, a resin layer **22** (hereinafter "substrate front side resin layer") and a resin layer **23** (hereinafter "substrate rear side resin layer." The core member **21** in the shape of a flat plate-like board is composed of a material which has excellent electrical conductivity, excellent heat conductivity and high rigidity. The substrate front side resin layer **22** covers the front surface of the core member **21** (in the direction of the drawing, the upper surface). The substrate rear side resin layer **23** covers the rear surface of the core member **21** (in the direction of the drawing, the lower surface).

The essential physical characteristics for the core member **21** are the above-mentioned three: excellent electrical conductivity, excellent heat conductivity and high rigidity. "Excellent electrical conductivity" pertains to the property of a material that allows electricity to pass through easily (that is, electrical resistance is low). "Excellent thermal conductivity" pertains to the ability to convey heat easily (that is, thermal conductivity is high). "High rigidity" pertains to minimal stress deformations due to bending or compressing. The construction material is not limited. What is essential is just to have the above-mentioned physical characteristics. Typically, metal (metallic) is preferred and especially more preferable when metals such as Cu (copper), Alloy 42, Invar, etc., are used which simultaneously satisfy the above-mentioned three physical characteristics.

Additionally, the material of the resin layers (the substrate front side resin layer **22** and the substrate rear side resin layer **23**) covering the front and rear of the core member **21** has electrical insulating and environmental capabilities (water resistant, acid resistant, etc.), and if required further has the necessary dielectric constant. An insulating material, for example, such as epoxy, polyimide, cyanate ester, Teflon (registered trademark), etc., used for a resin material or printed circuit boards can be used.

A through hole **24** (hereinafter "bottomless hole") of predetermined opening shape is formed in the core member **21** and penetrates the front and rear (refer to FIGS. **1**A and **1**B). The bottomless hole **24** is used as a mounting hole of an electronic component **25**. Hence, an electronic component **25** is mounted (embedded) in the inner part of the composite multi-layer substrate **20** and improvement of high density packaging can be achieved.

According to the composite multi-layer substrate **20** which has such a structure, physical strength (flexural rigidity, etc.) of the composite multi-layer substrate **20** can be acquired with the rigidity of the core member **21**. Therefore, the reinforcing material (glass cloth **7**; refer to FIG. **12**) used in the past can be made redundant and various inconveniences related to the application of the glass cloth can be avoided.

Namely, as the core member **21** which has "high rigidity" at least uses other reinforcement material which replaces the glass cloth, the problem of ion migration explained earlier [Ion migration occurs relative to the interface of the glass fiber **6** front surface and the resin, whereby the insulation becomes destroyed and the electrical characteristic is deteriorated.]; and the problem of increased manufacturing cost [In order to form a bottomed hole **9** for a cavity, it is necessary to physically remove a portion of the resin layer **2**. In that case, even though the inner part glass fiber **6** of resin layer **2** must be severed and such a cutting operation uses a precision processing apparatus, for example generally a laser, etc., a truncation error cannot be denied and considerable work hours are required. Moreover, when a plurality of the bottomed hole **9** is necessary, the number of needed work hours only redoubles which causes a rise in manufacturing cost.] can be solved. Thus, the ultimate objects of the present invention (to avoid deterioration of the electrical characteristic accompanying generation of migration and to cutback the manufacturing cost) can be achieved.

In addition, although the above explanation showed an example of mounting an electronic component **25** in the bottomless hole **24** formed in the core member **21**, an electronic component mounting hole does not necessarily have to be a hole (namely, a bottomless hole) which "penetrates front and rear." For example, as shown in FIG. **1**C, a concave portion **26** (hereinafter "flat bottomed hole") may be formed in the core member **21** and an electronic component **25** can be mounted in a bottomed hole **26**. In this manner, by direct contact or via heat conductive adhesive, etc. between an electronic component **25** and the base **27** of a flat bottomed hole **26**, etc., the heat generated by an electronic component **25** can efficiently escape to the core member **21**. Thus, the core member **21** can be used for heat dissipation of an electronic component **25**.

Also, it is desirable to presume that the resin layer structure (selection of materials, thickness of layer, etc.) for the front and rear surface sides of the core member **21** be approximately the same. The composite multi-layer substrate **20** front and rear surfaces are made into a symmetrical structure. Because the resin layers on the front and rear surface sides (front side resin layer **22** and rear side resin layer **23**) of the core member **21** lessen differential thermal expansion, "curvature" of the composite multi-layer substrate **20** can be controlled.

As stated above, even though the front and rear surface sides of the core member **21** are each covered by the front side resin layer **22** and the rear side resin layer **23**, it is desirable when the sides of the core member **21** are also covered by resin, etc. That is, it is desirable to completely enclose (sealant or coating) "all the surfaces" of the core member **21** with an environmentally resistant material equivalent to resin or thereto. Since the front and rear surfaces of the core member **21** each covered by the front side resin layer **22** and the rear side resin layer **23** are not unprotected to ambient air, there is no concern about oxidation. However, when the sides of the core member **21** are exposed, there is a possibility that the surfaces may oxidize gradually and generate an electrical short circuit, etc. causing a malfunction between the mounted components adjoining this exposure.

FIGS. **2**A and **2**B are composition diagrams when mounting an electronic component **25** in a bottomless hole **24** of the core member **21**. Referring to FIG. **2**A, when the upper surface height position of the core member **21** is assumed to be La and the upper surface height position of an electronic component **25** is assumed to be Lb, as for the differential d (d=La−Lb) of the height, it is desirable to formulate a value of zero or more than zero (namely, La=Lb or any relation of La>Lb). In this manner, since the upper surface height position La of the core member **21** constitutes a position always higher than the upper surface height position Lb of an electronic component **25**, it can respond to the loading (load added when the front side resin layer **22**, etc. is laminated) to an electronic component **25** on the core member **21** at the time of manufacturing the composite multi-layer substrate **20** and damage to an electronic component **25** is avoidable.

FIG. **2**B is a composition diagram when mounting the electronic component **25** in a bottomless hole **24** of the core member **21**. The variation in FIG. **2**B places a thermally conductive resin **28** interposed between an electronic component **25** and the rear side layer **23** which are in contact with a side edge of the thermally conductive resin to the internal surface of a bottomless hole **24** of the core member **21**. In this manner, the heat generated by an electronic component **25** can be dissipated efficiently to the core member **21** from the internal surface of a bottomless hole **24** via the thermally conductive resin **28**.

Furthermore, FIG. **3**A is a composition diagram when mounting an electronic component **25** in a bottomless hole **24** of the core member **21**. The variation in FIG. **3**A places a bottomless hole **29** also in the rear side resin layer **23** loaded with a height size adjustment member **30** which constitutes two bottomless holes **24**, **29** from good thermally conductive material (for example, copper, etc.) and an electronic component **25** is placed and mounted on this height size adjustment member **30**.

Here, when calculating the depth size Ha of the core member **21**, the height size Hb of the resin side layer **23** and the height size Hc of the height size adjustment member **30**, in order to adjust the differential d of the height of the upper surface position La of the core member **21** and the upper surface height position Lb of an electronic component **25** to the desired value, it only has to satisfy the relation of:

$$Ha+Hb=Hc+Hd+d \tag{1}$$

because Ha, Hb and Hc are fixed values. For example, in order to make d=0:

$$Ha+Hb=Hc+Hd \tag{2}$$

Therefore, height Hd of the height size adjustment member is suitable as:

$$Hd=Ha+Hb-Hc \tag{3}$$

Based on this, even if it is a case that the height size Hc of an electronic component **25** is extremely small as compared with the depth size Ha of the core member **21**, the above-stated size differential d can be readily set to a desired value and various electronic components with different height sizes can be conveniently embedded in the composite multi-layer substrate **20**. Also, if good thermally conductive material is used as the height size adjustment member **30**, heat generated by an electronic component **25** can be dissipated from the height size adjustment member **30** to the core member **21** via the internal surface of a bottomless hole **29**. Further, heat can be dissipated also to the exterior from the underside of the height size adjustment member **30** and the heat dissipation effect of an electronic component **25** can be improved much more.

FIG. **3**B is a composition diagram when mounting an electronic component **25** in a bottomless hole **24** of the core member **21**. The variation in FIG. **3**B makes it possible to apply an electronic component **25** with a large height size. Referring to FIG. **3**B, the height size Hc of an electronic component **25** exceeds the depth size Ha of the core member **21** (Ha<Hc). This electronic component **25** is mounted on both sides of a bottomless hole **24** formed in the core member **21**, a bottomless hole is formed in the rear side resin layer **23**. A portion of the underside of an electronic component **25** and the sides are held via a thermally conductive resin **32** in two holes (a bottomless hole **24** and bottomless hole **31**).

In this manner, even if an electronic component **25** has a large height size, the above-stated size differential d can be readily set as the desired value. Heat generated by an electronic component **25** can be dissipated from the thermally conductive resin **32** to the core member **21** via the internal surface of a bottomless hole and can also be dissipated from the underside of the thermally conductive resin **32** to the exterior. Thus, the heat dissipation effect of an electronic component **25** can be improved still more.

FIGS. **4**A and **4**B is a main cross sectional plan view in another section of the core member **21** and an external perspective view of the section. Referring to these drawings, a column segment **33** is set in an optional position (although adjacent to a bottomless hole **24** in the drawing, it is not limited to this) of the core member **21**.

The column segment **33** is originally a portion of the core member **21**. Specifically, it is a “remaining part” of the core member **21** produced by having formed a cylindrical dividing groove **34** in an optional position of the core member **21**. A column segment **33** can be used as follows. Namely, when a via hole **35**, **36** is formed in both the front side resin layer **22** and the rear side resin layer **23** and an electrode **37**, **38** is formed in the via hole **35**, **36** in both directions of one end side and the other end side of the column segment **33** (island-shaped sections), the electrode **37**, **38** are electrically connected via a column segment **33**. Furthermore, because the end face of each of the electrode **37**, **38** is exposed to the front and rear surfaces of the composite multi-layer substrate **20**, the electrode **37**, **38** and the column segment **33** can be used as double-sided penetration wiring of the composite multi-layer substrate **20**. Thus, an electrical signal or power supply voltage transmission path can be obtained.

FIG. **5** is a cross sectional plan view of a module **40** applied to the present invention.

A “module (the United Kingdom: module)” signifies “a standardized unit.” Although a module is interpreted as a type of unit or component, a unit is usually situated as an exchangeable integrant part. A module does not assume replacement parts being situated as a minimum configuration module by itself and further is designed and manufactured as an apparatus with a specific function in most cases. However, since in actuality that precise categorization is not defined, in the description it is assumed that this terminology (“module”) is defined as follows. Namely, a module which can be said to comprise one or more (a combination of electronic components of different kinds is included) electronic components (these are named generically and called an “electronic component”) of a semiconductor chip, a resistance element, a capacitative element or others are mounted in the inner sections and a necessary electronic circuit function is actualized, as well as an apparatus which can be distributed individually in the marketplace. Subsequent replacement simplicity including (installing) optional electronic devices is not especially considered. It may have a mounting configuration which can be attached and detached by a connector, etc. and may be formed mounted mostly in a fixed state by soldering, etc.

A module **40** as shown in FIG. **5**, for example, can function as a power amplifier module which is an integral part of an Radio Frequency (RF; high-frequency wave) section in a portable telephone or a Personal Digital Assistant (PDA) with a wireless communications device, an antenna switch module or an RF module which unifies these and can be distributed in the marketplace by itself as a product.

A module **40** actualizes desired circuitry (a power amplifier module, an antenna switch module or an RF module that unified these) by mounting the necessary electronic components in the front surface and inner section of a composite multi-layer substrate having a structure which applies the technical concept of the above-mentioned embodiments (first through third embodiments).

As shown in FIG. **5**, the module **40** structure can be roughly divided into an intermediate layer A, a upper rank layer B laminated to the intermediate layer A upper surface, and a lower rank layer C laminated to the intermediate layer A lower surface.

The intermediate layer A is laminated to a front side resin layer **42** and a rear side resin layer **43** respectively to both sides of a core member **41**. A plurality (cross sectional plan view shows four) of bottomless holes **44-47** are formed in the core member **41** and has a structure embedded with suitable electronic components **48-51** for each of the bottomless hole **44-47**.

Next, as an explanation for convenience, assume the electronic component **48** on the left end is a semiconductor chip with a short height size, the electronic component **49** which is second from the left is a capacitor (the height size is the depth size level of the core member **41**), the electronic component **50** which is third from the left is a resistor (the height size is the depth size level of the core member **41**) and the electronic component **51** is a semiconductor chip with a tall height size.

The electronic component **49**, **50** with a height size about the depth size of the core member **41** are embedded and mounted in the bottomless hole **45**, **46** respectively. As stated above, the electronic component **49**, **50** are a capacitor and a resistor respectively. Since these components generate relatively little heat, the limitations of particular heat countermeasures are not required. An adhesive **52**, **53** may be filled in between the rear side resin layer **43** to perform adhesion of the electronic component **49**, **50**. When heat generation of the component is severe, a good heat conductor should be used for the adhesive **52**, **53** respectively.

Moreover, if it is the electronic component **48** with a short height size, a height size adjustment member **54** is put in and the height size is adjusted. When heat generation of the electronic component **48** is severe, a good heat conductor is used for the material of the height size adjustment member **54**. Further, if it is the electronic component **51** with a tall height size, the height size is adjusted by embedding so that the rear side resin layer can be reached. When heat generation of the electronic component is severe, the sides and underside of the electronic component **51** are covered and laminated with a thermally conductive resin **55**. In any case, the height size adjustment member **54** and a thermally conductive resin **55** which borders the portion of the core member **41** and the portion of the base section exposed from the intermediate layer A underside.

Besides, a column segment **56**, **57** is set in an optional position of the core member **41**. Also, the column segment **56**, **57** constitute signal transmission paths or power supply transmission paths which penetrate the intermediate layer A front and rear with an electrode **58**, **59**, **60**, **61** established so as to connect to both sides. In the intermediate layer A, **62-75** are electrodes.

The lower rank layer C forms an electrode pattern (described later in detail) of the required shape in both sides of a resin layer **76** and the upper rank layer B also forms an electrode pattern (described later in detail) of the required shape in both sides of a resin layer **77**. Also, surface mounting of an electronic component **78-82** is performed on a predetermined electrode pattern. A covering cover **40**a (desirable for functioning as electromagnetic shielding for EMI measures) is attached for the electronic component **78-82**. Although not limited in particular, the electronic component **78**, **79** and **81** is a capacitor and the electronic component **80**, **82** is a resistor.

Thus, the module **40** uses a plate-like core member **41** consisting of material (Cu (copper), Alloy 42, Invar, etc.) having excellent electrical conductivity, excellent heat conductivity and high rigidity, as well as a structure built up with the resin layers **76**, **77** in the front and rear surfaces of the core member **41**. Here, the two resin layers **76**, **77**, for example, are both made with a resin, such as epoxy, polyimide, polycyanate ester, Teflon (trademark), etc. as the main ingredients (functional powder, such as dielectric powder and magnetic substance powder mixed in by desire is also good) or an insulating material used for a printed circuit board can be used. The characteristic is in the point of view (namely, the point of view which is a glass cloth less layer) of not having a glass cloth **7** (referring to FIG. **12**) explained at the beginning. As the flexural rigidity of the module **50** is obtained by the core member **41** which mainly has an intermediate layer A base, it does not require the glass cloth **7** as reinforcing material.

The four cavities (those which form the bottomless hole **44-47**) of the core member **41**, a semiconductor chip (electronic component **48**, **51**), a capacitor (electronic component **49**) and a resistor (electronic component **50**) are each embedded. Then, among those electronic components which generate a large amount of heat (electronic component **48**, **51**), the bottom portion of each component and side surfaces (when required) are each connected to the core member **41** via a good thermally conductive material (height size adjustment member **54** and thermally conductive resin **55**) and also connected with the upper surface electrode pattern **82**, **83** of the lower rank layer C. The core member **41** dissipates via the internal surface of the bottomless holes. Furthermore, an electronic device substrate which mounts the module **40** will dissipate heat via the underside of an electrode pattern **86** of the lower rank layer C. Thus, sufficient heat dissipation can be acquired.

Additionally, as for a semiconductor chip (electronic component **48**) with a short height size with the height size adjustment member **54** (An independent member or built up with plating. It has excellent heat conductivity and the height size adjustment of the electronic component **48** is carried out.) which is placed in a cavity (Those which are formed in the bottomless hole **44** of the core section **41** and a through hole of the same position.) formed in the lower rank layer C, it can be raised to a mounting height in the desired position and the relation (refer to the relation of La and Lb of FIG. **2**) between the upper surface height position of the electronic component **48** and the upper surface height position of the core member **41** can be maintained appropriately.

As for a semiconductor chip with a tall height size (electronic component **51**), the relation (refer to the relation of La and Lb of FIG. **2**) between the upper surface height position of the electronic component **51** and the upper surface height position of the core member **41** can be maintained appropriately by placing an electronic component into a cavity (those which are formed in the bottomless hole **47** of the core part **41** and a through hole of the same position) formed in the lower rank layer C.

Patterning (formation of the bottomless hole **44-47** or the column segment **56**, **57**) in the intermediate layer A of the core member **41** should be performed in the state where the rear side resin layer **43** emulates the underside of the core member **41**.

Because of the “island” shaped sections which are not removed in particular, the sections can be used as the column segment **56**, **57** when the core member **41** is patterned in this state. Therefore, a columnar structure (what is called a “mailbox”: those which are formed of the electrode **58**, **59**, **60** and **61** connected with the column segment **56**, **57** to both ends) for connecting the front and rear of the intermediate layer A can be readily formed by physical processing (for example, etching) of the core member **41**. When etching the core member **41** with a common etchant, such as Ferric Chloride, etc., the core member **41** material can be made from Cu (copper), Alloy 42, Invar, etc. from a relation of physical properties. However, when Alloy 42 and Invar are selected, it is preferred to perform Cu plating to the front surface of Alloy 42 or Invar from the prevention standpoint of ion migration, etc.

Next, the manufacturing process of the above-stated module **40** will be explained, with reference to FIG. **6**A.

A plate-like core member **41** having excellent electrical conductivity, excellent heat conductivity and high rigidity comprising, a laminated resin layer (rear side resin layer **43**) on the underside (referring to the upper and lower side directions in the drawing) of core member **41**, for example, Cu, Alloy 42 or Invar, etc. and further, a thin film **90** having excellent electrical conductivity, excellent heat conductivity and high rigidity on the underside of the rear side resin layer **43** is glued together.

Here, as the material of the rear side resin layer **43**, an insulating material, for example, such as epoxy, polyimide, cyanate ester, Teflon (registered trademark), etc. used for a resin material or printed circuit boards can be used. Also, as for the thin film **90** having the above-mentioned characteristics, typically copper foil can be used.

Basically, solutions which unify the rear side resin layer **43** and the thin film **90** may be used. For example, an apparatus which uses copper foil with resin or copper foil glued together to dry film can be used.

Next, with reference to FIG. **6**B, the core member **41** is patterned and the bottomless hole **44-47** and the column segment **56**, **57** are formed. The bottomless hole **44-47** each constitute a cavity for embedding the electronic component **48-51**. Patterning of the core member **41** can be carried out, for example, by applying a subtractive process. In this case, an etchant current used with ordinary printed circuit boards, such as Ferric Chloride or Cupric Chloride (acid based) etchant, etc. can be used.

Next, with reference to FIG. **6**C, as for the bottomless hole **44**, **47** corresponding to the electronic component (electronic component **48**, **51**) which generate a large amount of heat, the rear side resin layer **43** underneath is removed in the same opening shape as the bottomless hole **44**, **47** (refer to the dotted line section) and the thin film **90** is exposed. Removal of the rear side resin layer **43**, for example, can be carried out, for example, by laser abrasion, plasma etching, etc.

FIG. **7** shows outline views after the third process in which FIG. **7**A illustrates the upper surface side perspective view and FIG. **7**B is the lower surface side perspective view. Also, FIG. **7** and the above-stated process diagrams (FIG. **6**A-**6**C) do not strictly correspond. The points of view that should be understood in FIG. **7** are the “cavities” and the “mailbox” which are formed in the core member **41**. Accordingly, as shown in FIGS. **7**A and **7**B, the resin layer **91** (equivalent to the rear side resin layer **43** of FIG. **6**) and copper foil **92** (equivalent to the thin film **90** of FIG. **6**) are glued together on the underside of the core member **41**. The core member **41** is patterned with several of the cavity **93-95** (equivalent to the bottomless hole **44-47** in FIG. **6**) and several mailbox **96-103** (equivalent to the column segment **56**, **57** in FIG. **6**) are formed.

Next, with reference to FIG. **8**A, the height size adjustment member **54** is inserted into the bottomless hole **44** on the left end and thermally conductive resin **104** is applied to the height size adjustment member **54**. Moreover, the adhesive **52**, **53** is applied to the second and third of the bottomless hole **45**, **46** from the left and further the thermally conductive resin **55** is applied to the right end bottomless hole **47**. The height size adjustment member **54** may be independent (standalone) or may be built up with plating, such as Cu, etc. It only has to have excellent heat conductivity and be able to perform height size adjustment of the electronic component **48**. As the name suggests, the thermally conductive resin **104**, **55** has a function which performs temporary fastening of the embedded electronic component **48**, **51** while also having a heat dissipation effect. The adhesive **52**, **53** only need to have a function which mainly fixes (bonds) the embedded electronic component **49**, **50**.

Here, although the electronic component **49**, **50** which do not require particular heat dissipation countermeasures are fixed with the adhesive **52**, **53**, the embodiment is not limited to this. For example, in the case of the first process (FIG. **6**A), lamination is completed wherein non-hardened sections remain without performing a full cure of the resin layer when the core member **41** and the resin layer (rear side resin layer **43**) are glued and laminated. In the case of the electronic component **49**, **50** mounted in the fourth process (FIG. **8**A), it is possible to fix the electronic component **49**, **50** by making each a high temperature case and recovering some viscosity of the resin layer. When performed in this manner, the adhesive **52**, **53** coating operation can be considered unnecessary.

Next, with reference to FIG. **8**B, the electronic component **48-51** respectively corresponding to each of the bottomless hole **44-47** are mounted. As for the first electronic component **48** wherein heat dissipation is necessary, heat can be dissipated to the core member **41** and the thin film **90** via the thermally conductive resin **104** and the height size adjustment member **54**. Also, as for the second electronic component **51** wherein heat dissipation is necessary, heat can be dissipated to the core member **41** and the thin film **90** via the thermally conductive resin **55**.

Next, with reference to FIG. **8**C, after mounting the electronic component **48-51**, the core member **41** is encapsulated by a resin. By means of this sealing, the front side resin layer **42** in the first through third embodiments is formed and the crevices surrounding the front surface of the core member **41**, cavities (bottomless hole **44-47**) and through mailboxes (column segment **56**, **57**) are completely covered by the front side resin layer **42**. Here, it is desirable to also encapsulate completely in resin the side edges (refer to the dotted line enclosure parts A and B in FIG. **8**C) of the core member **41**. As a resin which encapsulates the side edges, although it may function as a portion of the front side resin layer, the side resin layer may be set in another body with the front side resin layer. When produced in such a manner, all the surfaces of the core member **41** are insulated from the environmental atmosphere (air) and oxidation of the core member **41** by oxygen, moisture, etc. in the environment can be prevented. Also, electrical short circuits between adjacent mounted components, etc. is prevented and malfunctioning can be avoided.

Here, as for the material of the front side resin layer **42**, an insulating material, for example, a resin material, such as an epoxy, polyimide, cyanate ester, Teflon (registered trademark), etc. for printed circuit boards can be used.

FIGS. **9**A and **9**B are outline views after the fifth process and after the sixth process respectively. Also, FIG. **9** and the above-stated process diagrams (FIG. **8**A-**8**C) do not strictly correspond. The point of view that should be understood in FIG. **9** is the mounted state of the electronic components to a “cavities” formed in the core member **41** and the sealed state by means of a resin (front side resin layer **42**). Accordingly, as shown in FIG. **9**, the electronic component **105-107** (equivalent to the electronic component **48-51** of FIG. **8**) are mounted correspondingly in each of the cavity **93-95** formed in the core member **41**. The core member **41** in the state whereby the electronic components **105-107** are mounted is completely encapsulated by a resin **108** (equivalent to the front side resin layer **42** of FIG. **8**). In FIG. **9**B, for convenience of the diagram, the sides of the core member **41** after encapsulating by a resin **108** are exposed. The sides are also actually covered completely by the resin **108**.

Next, with reference to FIG. **10**A, the thin film **90** is patterned. By this patterning, the heat dissipation pattern **83** for dissipating direct heat to the thin film **90** via thermally conductive resin **55** among the electronic component **48**, **51** which require heat dissipation countermeasures is formed. That is, etching of the thin film **90** is performed so that the heat dissipation pattern **83** remains.

Next, with reference to FIG. **10**B, the small holes **109-125** are made in each of the front side resin layer **42** and the rear side resin layer **43**. For example, after partially removing each class of resin by a Carbon Dioxide (CO2) gas laser, Ultra Violet (UV) laser or excimer laser, etc., a small hole **109-125** is formed by removing the residual substance of the resin by permanganic acid, plasma ashing, etc.

Next, with reference to FIG. **10**C, coppering and etching are performed to the small holes **109-125**, an electrode **62-75** for performing the interlayer electric connection with terminals of the electronic component **48-49**, an electrode **58-61** for carrying out interlayer connection through the core member **41**, etc. are formed. When necessary, in order to ensure the best adhesion of a resin and plating copper, the resin front surface may be roughened by permanganic acid, etc. and enhancement processing of the surface areas may be performed. Also, **126-154** are an electrode or a circuit pattern which are formed in each exposed surface of the front side resin layer **42** and the rear side resin layer **43**. The intermediate layer A in FIG. **5** is produced by this tenth process.

Next, with reference to FIG. **10**D, the upper rank layer B and the lower rank layer C in FIG. **5** are formed by lamination in resin of each of the front side resin layer **42** and the rear side resin layer **43** and by forming a necessary solder resist pattern for the front and rear of those resin.

FIGS. **11**A and **11**B are outline views after the tenth process which illustrates an upper surface side perspective view and an underside perspective view respectively. The point of view that should be understood in FIG. **11** is the upper rank layer B is laminated on the intermediate layer A and the lower rank layer C is laminated under the intermediate layer A. Also, the necessary electric conductivity pattern **155-170** formed in the exposed surface of the upper rank layer B and the lower rank layer C should be understood. Those which are positioned in the exposed surface of the lower rank layer C among the electric conductivity pattern **155-170** and has the greatest area (electric conductivity pattern **166**) is used as a heat dissipation pattern for dissipating the heat of the electronic component **48** and **51**.

The module **50** shown in FIG. **5** is completed by attaching necessary surface mount components (electronic component **78-82** of FIG. **5**) after performing the above processes and attaching a cover **40**a when needed.

The module **40** which has such a structure has the following results.

Since the plate-like core member **41** consisting of material (Cu, Alloy 42, Invar, etc.) having excellent electric conductivity, excellent heat conductivity and high rigidity is constituted as a base, bending stress of the substrate can be minimized with the rigidity of the core member **41** and substrate deformation which is not preferred can be avoided or controlled. Therefore, since conventional reinforcement (glass cloth) in the core member **41** is not needed, the exceptional effect of not producing associated problems related to the glass cloth (Notably, the problem of ion migration and the problem of the increased manufacturing cost accompanying the glass cloth cutting process at the time of cavity shaping.) is acquired.

Since the “island” shaped sections are not removed when the column segments are formed in a needed section wherein a resin (rear side resin layer **43**) is affixed on one side (embodiment rear surface) of the core member **41**, these can be used as the island-shaped section **56**, **57** (column segments). Then, the electrical signal transmission paths and power supply transmission paths between layers can easily be constituted via the island-shaped sections **56**, **57** and simplification of the modular design can be achieved.

A cavity (bottomless hole **44-47**) can be formed in the core member **21**, as well as the electronic components **48-51** can be readily embedded in the cavity and high density packaging of the substrate can be conjointly improved with surface mounting.

When an electronic component with a short height size or tall height size is embedded, a height size adjustment member **54** is inserted or a hole in the rear side resin layer is used. The height size of electronic components can be readily adjusted and set properly so that the upper surface height position of an electronic component does not exceed the upper surface height position of the core member **41**. For this reason, it can respond to loading at the time of manufacturing the composite multi-layer substrate and breakage of the electronic components can be prevented.

When dissipating the heat of the electronic components, the core member **41** can be used for a heat dissipation path or a heat dissipation pattern (electrode pattern **166** of FIG. **11**B) formed in the exposed surface of the lower rank layer C can be used for heat dissipation. Especially the electronic component **48**, **51** which generate a large amount of heat can be used in the module **40** constituted by embedding and can be considered as a suitable object.

Curvature of the substrate can be avoided or controlled to the intermediate layer A by making the intermediate rank layer A, upper rank layer B and lower rank layer C into a substantially symmetrical structure.

As set forth above, the advantages of the present invention will now be explained.

The present invention comprises a core member having sufficient rigidity to resolve and eliminate various inconveniences (Namely, aggravation of electrical properties by accompanying generation of ion migration and the increased manufacturing cost accompanying the glass cloth cutting process) that accompany the use of conventional art type glass cloth as a reinforcing fabric material.

The present invention comprises a core member having sufficient rigidity to resolve and eliminate various inconveniences (Namely, aggravation of electrical properties by accompanying generation of ion migration and the increased manufacturing cost accompanying the glass cloth cutting process.) that accompany the use of conventional art type glass cloth as a reinforcing fabric material.

According to the present invention, since the core member uses a metallic core material the desired rigidity can be ensured and thus making the glass cloth fabric no longer necessary, and further the core member can be used also as an electrical signal path and as a heat dissipation path.

According to the present invention, the core member is entirely covered by resin material and the core member is isolated from ambient air. Thus, deterioration by oxidization, etc. can be prevented and durability can be improved.

According to the present invention, using other sections of the core member and divided column segments can be used as a part of the electrical signal transmission path or power supply voltage transmission path to the direction of the front and rear surfaces of the substrate and flexibility of the wiring design can be improved.

According to the present invention, the core member can be used as a heat dissipation path of electronic components, and especially in cases when embedding electronic components which generate a large amount of heat can be considered as a suitable object.

According to the present invention, the upper surface height position of electronic components can respond to loading at the time of manufacturing the composite multi-layer substrate and breakage of the electronic components can be prevented.

According to the present invention, the height relation between electronic components and the core member can be adjusted and the upper surface height position of the core member can be made higher than the upper surface height position of an electronic component.

According to the present invention, the height size adjustment member used for the height size adjustment can be used also as a heat dissipation member.

According to the present invention, a module which has the effects of the present invention according to the claims can be produced.

While the present invention has been described with reference to the preferred embodiments, it is intended that the invention be not limited by any of the details of the description therein but includes all the embodiments which fall within the scope of the appended claims.

What is claimed is:

1. A composite multi-layer substrate comprising:

a flat plate-like core member formed of a material having excellent electric conductivity, heat conductivity and high rigidity properties;

a front side resin layer covering a front surface of said core member;

a rear side resin layer covering a rear surface of said core member;

a bottomless hole formed in said core member penetrating a front and rear of said core member;

an electronic component mounted in said bottomless hole, the thickness of the electronic component after mounting in said bottomless hole at least does not cross the upper surface height position of said core member;

a small hole formed in either one or both of said front side resin layer and said rear side resin layer located directly above or directly below the electronic component and extends in a vertical direction of the front surface and the rear surface of said core member; and

an electrode formed on an interior portion of said small hole;

wherein an electrical connection to the electronic component is provided via the electrode.

2. A composite multi-layer substrate comprising:

a flat plate-like core member formed of a material having excellent electric conductivity, heat conductivity and high rigidity properties;

a front side resin layer covering a front surface of said core member;

a rear side resin layer covering a rear surface of said core member;

a bottomless hole formed in said core member and said rear side resin layer penetrating a front and rear of said core member and a front and rear of said rear side resin layer;

an electronic component mounted in said bottomless hole, the thickness of the electronic component height size being lower than a depth size of said core member; and

a height size adjustment member having excellent heat conductivity interposed among said electronic component and said core member and said rear side resin layer, wherein a rear side surface of the height size adjustment member and the rear side resin layer form a flat surface;

wherein said height size adjustment member is interposed between the bottom of said electronic component when said electronic component height size is lower than the depth size of said core member mounted in said bottomless hole, wherein said height size adjustment member is adapted to adjusting a height of said electronic component.

3. A composite multi-layer substrate comprising:

a flat plate-like core member formed of a material having excellent electric conductivity, heat conductivity and high rigidity properties;

a front side resin layer covering a front surface of said core member;

a rear side resin layer covering a rear surface of said core member;

a bottomless hole formed in said core member and said rear side resin layer penetrating a front and rear of said core member and a front and rear of said rear side resin layer;

an electronic component mounted in said bottomless hole, the thickness of the electronic component height size being lower than a depth of said core member; and

a height size adjustment member interposed among said electronic component and said core member and said rear side resin layer;

wherein said core member is a subtractively patterned core member.

4. The composite multi-layer substrate according to claim **1**, further comprising:

a column segment which divides said core member and penetrates said front and rear surfaces in a thickness direction of said core member; and

said column segment is adapted to providing an electrical signal transmission path or a power supply voltage transmission path to the front and rear surfaces of said substrate.

5. A composite multi-layer substrate comprising:

a flat plate-like core member formed of a material having excellent electric conductivity, heat conductivity and high rigidity properties;

a front side resin layer covering a front surface of said core member;

a rear side resin layer covering a rear surface of said core member;

a flat bottomed hole formed in an opening of either one of said front surface of said core member or said rear surface of said core member; and

an electronic component mounted in said flat bottomed hole, the thickness of the electronic component after mounting in said flat bottomed hole at least does not cross the upper surface height position of said core member;

a small hole formed in either one or both of said front side resin layer and said rear side resin layer located directly above or directly below the electronic component and extends in a vertical direction of the front surface and the rear surface of said core member; and

an electrode formed on an interior portion of said small hole;

wherein an electrical connection to the electronic component is provided via the electrode.

[6. The composite multi-layer substrate according to claim **1**, wherein said structures are thicknesses.**]**

[7. The composite multi-layer substrate according to claim **5**, wherein said structures are thicknesses.**]**

8. A module, comprising:

the composite multi-layer substrate set forth in any one of claims 1, 2, 3, and 5; and

one or more of electronic components mounted above or below said composite multi-layer substrate.

9. The module according to claim 8, wherein the module includes an upper rank layer, an intermediate layer below the upper rank layer, and a bottom rank layer below the intermediate rank layer,

wherein the composite multi-layer substrate corresponds to said intermediate layer, and

wherein the upper rank layer has electrode patterns therein, and said one or more of electronic components are mounted on said electrode patterns.

10. A composite multi-layer substrate comprising:

a flat plate-like core member formed of a metallic material, the core member having a mounting hole therein;

an upper resin layer covering an upper surface of said core member;

a lower resin layer covering a lower surface of said core member; and

an electronic component mounted in said mounting hole in the core member, a top surface of the electronic component being substantially flush with the upper surface of said core member or being positioned below a level of said upper surface,

wherein at least one of the upper resin layer and the lower resin layer has, at a position directly above or below the electronic component, a through-hole having an electrode formed therein to provide for an electric connection to the electronic component.

11. A composite multi-layer substrate comprising:

a flat plate-like core member formed of a metallic material the core member having a mounting hole therein;

an upper resin layer covering an upper surface of said core member;

a lower resin layer covering a lower surface of said core member; and

an electronic component mounted in said mounting hole in the core member, the thickness of the electronic component being smaller than the thickness of said core member,

wherein at least one of the upper resin layer and the lower resin layer has, at a position directly above or below the electronic component, a through-hole having an electrode formed therein to provide for an electric connection to the electronic component.

12. A composite multi-layer substrate comprising:

a flat plate-like core member formed of a metallic material the core member having a mounting hole therein;

an upper resin layer covering an upper surface of said core member;

a lower resin layer covering a lower surface of said core member; and

an electronic component mounted in said mounting hole, a bottom surface of the electronic component being not lower than a level of the lower surface of said core member,

wherein at least one of the upper resin layer and the lower resin layer has, at a position directly above or below the electronic component, a through-hole having an electrode formed therein to provide for an electric connection to the electronic component.

13. The composite multi-layer substrate according to any one of claims 10-12, further comprising:

a height size adjustment member between said core member and said lower resin layer,

wherein the height size adjustment member is distinct from said core member and does not provide an electronic connection to the electronic component mounted in said mounting hole,

wherein the thickness of the electronic component is smaller than the thickness of said core member.

14. The composite multi-layer substrate according to any one of claims 10-12, wherein said metallic material is Invar.

15. The composite multi-layer substrate according to any one of claims 10-12, wherein said metallic material is copper.

16. The composite multi-layer substrate according to any one of claims 10-12, wherein said metallic material has a rigidity that is greater than the rigidity of a resin material.

17. The composite multi-layer substrate according to any one of claims 10-12, wherein the mounting hole is a bottomless hole penetrating said core member.

18. The composite multi-layer substrate according to any one of claims 10-12, wherein the mounting hole is a bottomed hole.

19. A module, comprising:

an upper rank layer having electrode patterns therein;

an intermediate layer below the upper rank layer;

a bottom rank layer below the intermediate rank layer;

one or more of electronic components mounted on said electrode patterns in the upper rank layer;

wherein said intermediate layer is a composite multi-layer substrate comprising:

a flat slate-like core member having a mounting hole therein;

an upper resin layer covering an upper surface of said core member;

a lower resin layer covering a lower surface of said core member; and

an electronic component mounted in said mounting hole, the electronic component having an electrode pad,

wherein at least one of the upper resin layer and the lower resin layer has, at a position directly above the electronic component, a through-hole having an electrode formed therein, and the electrode in the through-hole is in direct contact with the electrode pad of the electronic component mounted in said mounting hole.

20. The module according to claim 19, wherein a top surface of the electronic component is substantially flush with the upper surface of said core member or is positioned below a level of said upper surface.

21. The module according to claim 19, wherein the thickness of the electronic component is smaller than the thickness of said core member.

22. The module according to claim 19, wherein a bottom surface of the electronic component is not lower than a level of the lower surface of said core member.

23. A module, comprising:

the composite multi-layer substrate set forth in an one of claims 10, 11, and 12; and

one or more of electronic components mounted above or below said composite multi-layer substrate.

24. The module according to claim 23, wherein the module further comprises an upper rank layer, an intermediate layer below the upper rank layer, and a bottom rank layer below the intermediate rank layer,

wherein the composite multi-layer substrate corresponds to said intermediate layer, and *wherein the upper rank layer has electrode patterns therein, and said one or more of electronic components are mounted on said electrode patterns.*

25. The module according to claim 19, wherein the electrode in the through-hole is directly below at least one of said electrode patterns in the upper rank layer and is electrically connected thereto.

26. The module according to claim 23, wherein the electrode in the through-hole is directly below at least one of said electrode patterns in the upper rank layer and is electrically connected thereto.

* * * * *

UNITED STATES PATENT AND TRADEMARK OFFICE

CERTIFICATE OF CORRECTION

Page 1 of 1

PATENT NO. : RE45,146 E
APPLICATION NO. : 13/846941
DATED : September 23, 2014
INVENTOR(S) : Masashi Miyazaki et al.

It is certified that error appears in the above-identified patent and that said Letters Patent is hereby corrected as shown below:

In the Claims,

Column 20, line 32, the text "slate-like" should be changed to --plate-like--.

Signed and Sealed this
Fourth Day of August, 2015

Michelle K. Lee

Michelle K. Lee
Director of the United States Patent and Trademark Office