US00RE40407E

(19) **United States**

(12) **Reissued Patent**

Natarius

(10) **Patent Number: US RE40,407 E**

(45) **Date of Reissued Patent: Jul. 1, 2008**

(54) **METHOD AND APPARATUS FOR MIXING FLUIDS**

(75) Inventor: **Eugene M. Natarius**, Saint Paul, MN (US)

(73) Assignee: **Vortex Flow, Inc.**, St. Paul, MN (US)

(21) Appl. No.: **11/251,634**

(22) Filed: **Oct. 14, 2005**

Related U.S. Patent Documents

Reissue of:

(64) Patent No.: **6,632,370**
Issued: **Oct. 14, 2003**
Appl. No.: **10/041,260**
Filed: **Jan. 8, 2002**

U.S. Applications:

(63) Continuation-in-part of application No. 09/561,999, filed on May 1, 2000, now Pat. No. 6,419,843.

(60) Provisional application No. 60/135,476, filed on May 24, 1999.

(51) **Int. Cl.**

B01D 21/26	(2006.01)
C02F 1/72	(2006.01)
E03F 5/00	(2006.01)

(52) **U.S. Cl.** **210/788**; 210/170.01; 210/170.08; 210/304; 210/787; 210/800; 210/806; 366/336; 366/338; 366/341; 95/269; 95/271; 55/459.1; 55/459.3

(58) **Field of Classification Search** 366/336, 366/338, 341; 210/170.01, 170.08, 304, 787, 210/788, 800, 806; 55/459.1, 459.3; 95/269, 95/271

See application file for complete search history.

(56) **References Cited**

U.S. PATENT DOCUMENTS

3,536,303	A	10/1970	Johanson
4,092,013	A	5/1978	Staaf
4,125,334	A	11/1978	Jones
4,175,871	A	11/1979	Suh et al.
4,337,032	A	6/1982	Duplouy et al.
4,459,865	A	7/1984	Welker
4,512,888	A	4/1985	Flynn

(Continued)

FOREIGN PATENT DOCUMENTS

EP	0646407	A1	4/1995
EP	0862500	A1	9/1998
EP	0967269	A1	12/1999
WO	WO 02/089942	A1	11/2002

OTHER PUBLICATIONS

US 6,354,730, 3/2002, Reeder et al. (withdrawn)

D.K.B. Thistlethwayte, "The Control of Sulphides in Sewage Systems", Ann Arbor Science Publishers Inc., Ann Arbor, Michigan, 48106, 1972 (pp. 94–106).*

Ackers, P. and Crump, E.S., *The Vortex Drop,* J. Inst. Civ. Eng., Aug. 1960, pp. 443–442, vol. 16, Paper No. 6430, The Institution of Civil Engineers, London.

Bennie, A.M. and Hookings, G.A., *Laboratory Experiments on Whirlpools,* Proc. Roy. Soc., Ser. A, 194, Jan. 1948, pp. 398–415, London.

Primary Examiner—David A Reifsnyder

(74) *Attorney, Agent, or Firm*—Patterson, Thuente, Skaar & Christensen, P.A.

(57) **ABSTRACT**

A method for entraining and mixing gas with liquids within a conduit or drop structure, comprising the channeling of one or more liquid flows into spiral flows of predetermined radius (radii), reducing the predetermined radius (radii) to increase the centrifugal forces acting upon the spiral flow(s) as the spiral flow(s) enter the conduit, and allowing gas access to the conduit to mix with and entrain within the spiral flow within the conduit or drop structure. The method can facilitate the mixing of gas with one or more fluid flows and/or reduce the release of gas emissions from the fluid(s) into the surrounding environment.

35 Claims, 7 Drawing Sheets

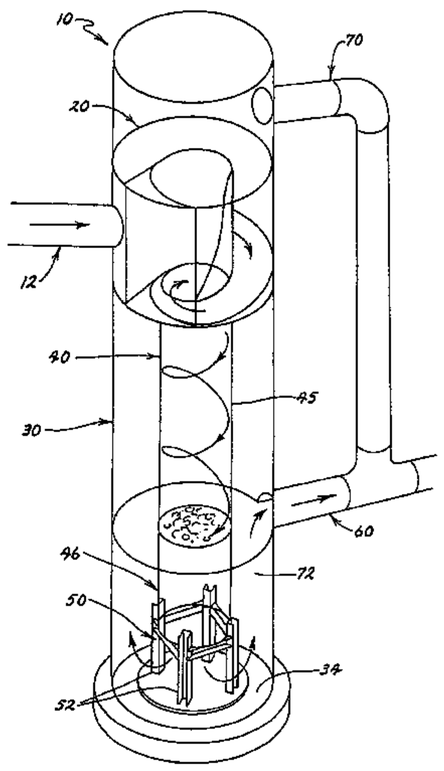

U.S. PATENT DOCUMENTS

4,516,726	A		5/1985	Hoie
4,534,659	A		8/1985	Dourdeville et al.
4,542,686	A		9/1985	Bansal
4,597,852	A		7/1986	York et al.
4,747,697	A		5/1988	Kojima
4,749,527	A		6/1988	Rasmusen
4,767,026	A		8/1988	Keller et al.
4,786,368	A		11/1988	York et al.
4,792,229	A		12/1988	Frohnert et al.
4,813,788	A		3/1989	Shih et al.
4,846,373	A		7/1989	Penn et al.
4,848,917	A		7/1989	Benin et al.
4,874,249	A		10/1989	Kabatek et al.
4,880,313	A		11/1989	Loquenz et al.
4,957,626	A		9/1990	Ashbrook et al.
5,000,922	A		3/1991	Turpen
5,024,647	A		6/1991	Jubin et al.
5,028,140	A		7/1991	Rodgers
5,037,584	A		8/1991	Toll
5,232,283	A		8/1993	Goebel et al.
5,255,974	A		10/1993	Signer
5,362,150	A		11/1994	Taylor
5,368,382	A		11/1994	Kawasaki et al.
5,423,608	A		6/1995	Chyou et al.
5,452,955	A		9/1995	Lundstrom
5,489,154	A		2/1996	Algreen-Ussing
5,509,349	A		4/1996	Anderson et al.
5,525,242	A		6/1996	Kerecz
5,575,909	A	*	11/1996	Foster 210/304
5,605,400	A		2/1997	Kojima
5,632,962	A		5/1997	Baker et al.
5,664,733	A		9/1997	Lott
5,720,164	A		2/1998	Corbett et al.
5,806,976	A		9/1998	Roque
5,813,759	A		9/1998	Gebrian
5,855,776	A		1/1999	Bowe et al.
5,916,491	A		6/1999	Hills
5,944,419	A		8/1999	Streiff
6,149,869	A		11/2000	Antonenko et al.
6,298,659	B1		10/2001	Knuth et al.
6,699,706	B1		3/2004	Brooks
6,797,181	B2		9/2004	Morse et al.
2001/0048900	A1		12/2001	Bardell et al.
2003/0007922	A1		1/2003	Dodson et al.

* cited by examiner

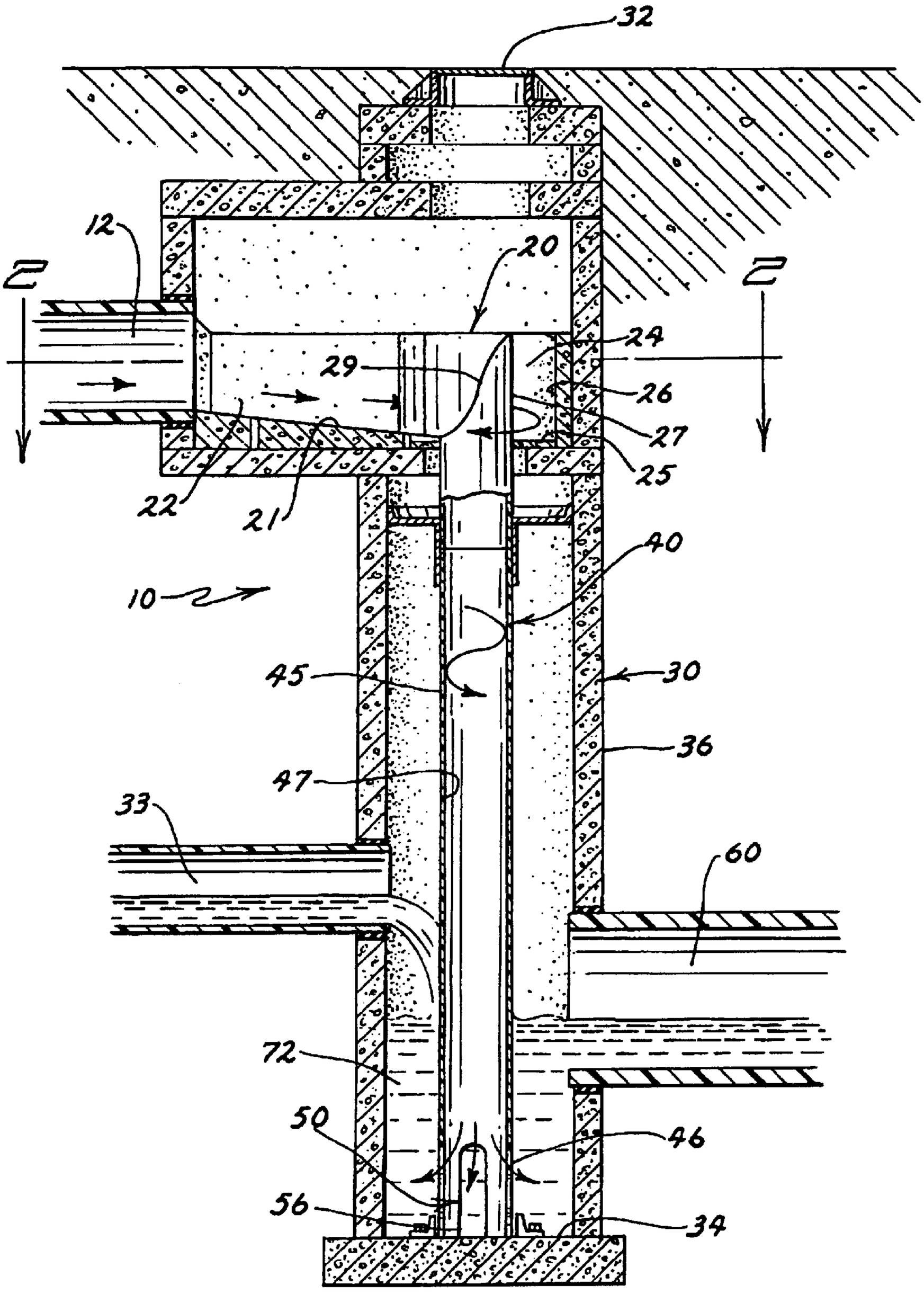

FIG. 1

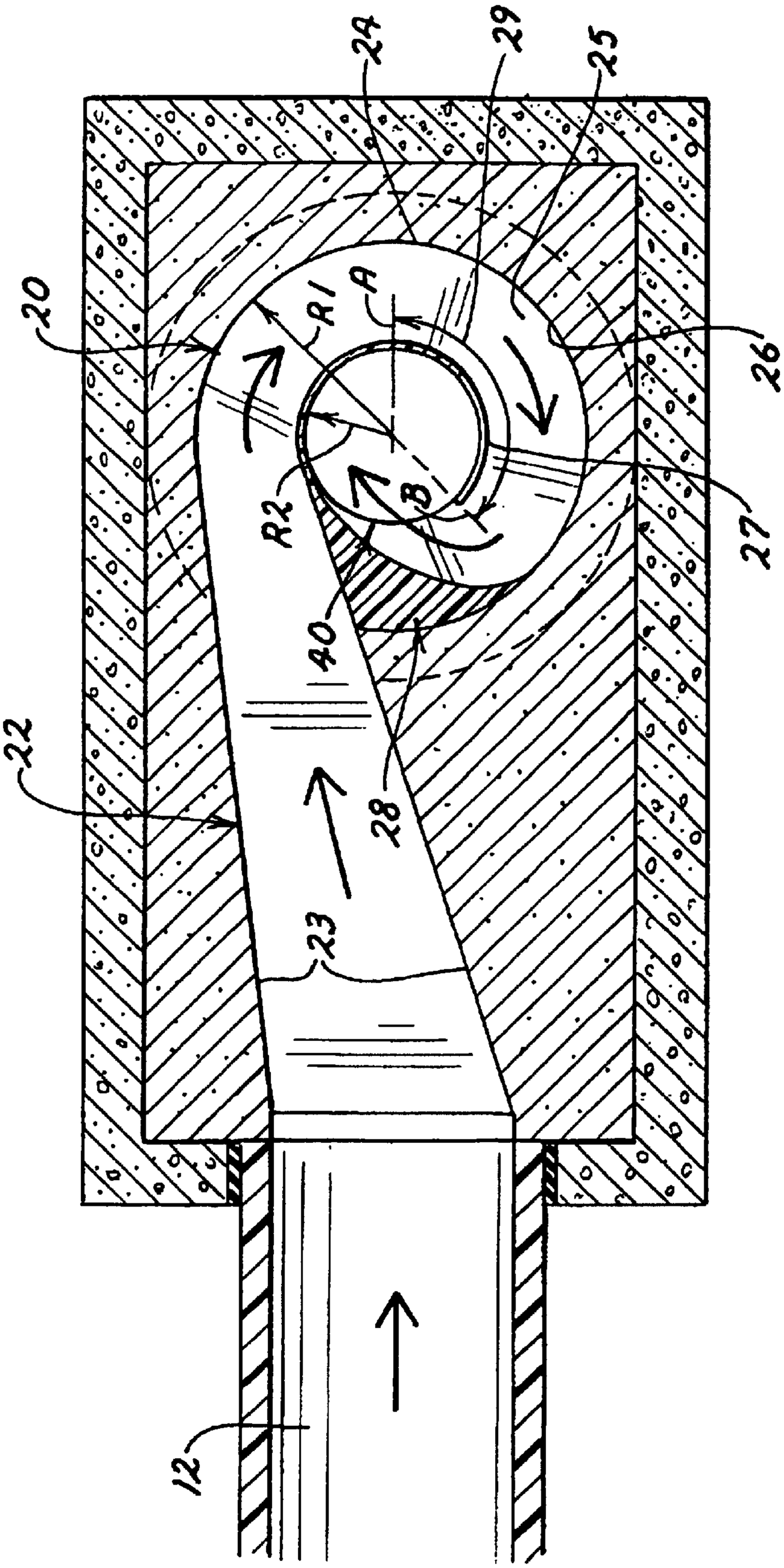

FIG. 2

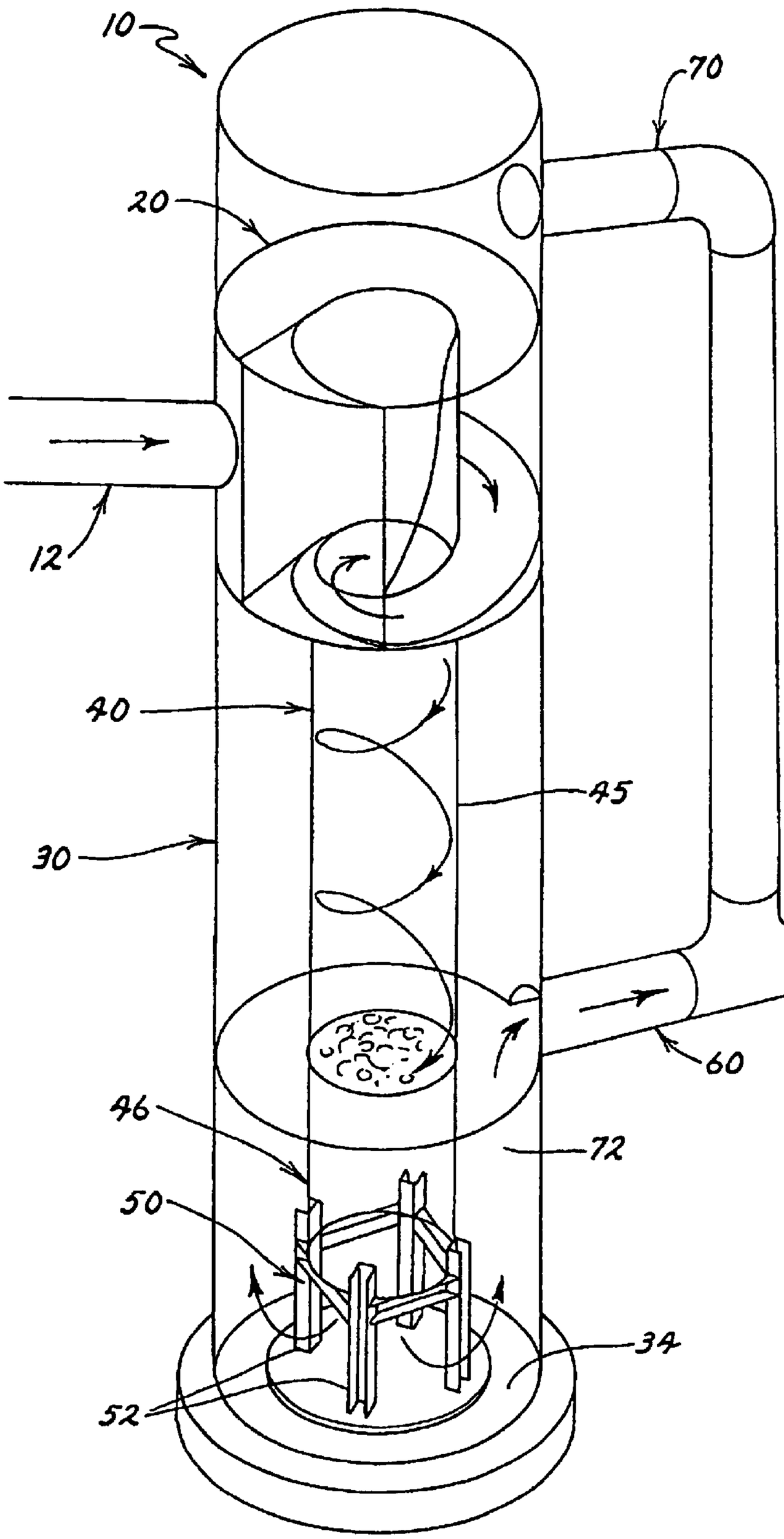

FIG. 3

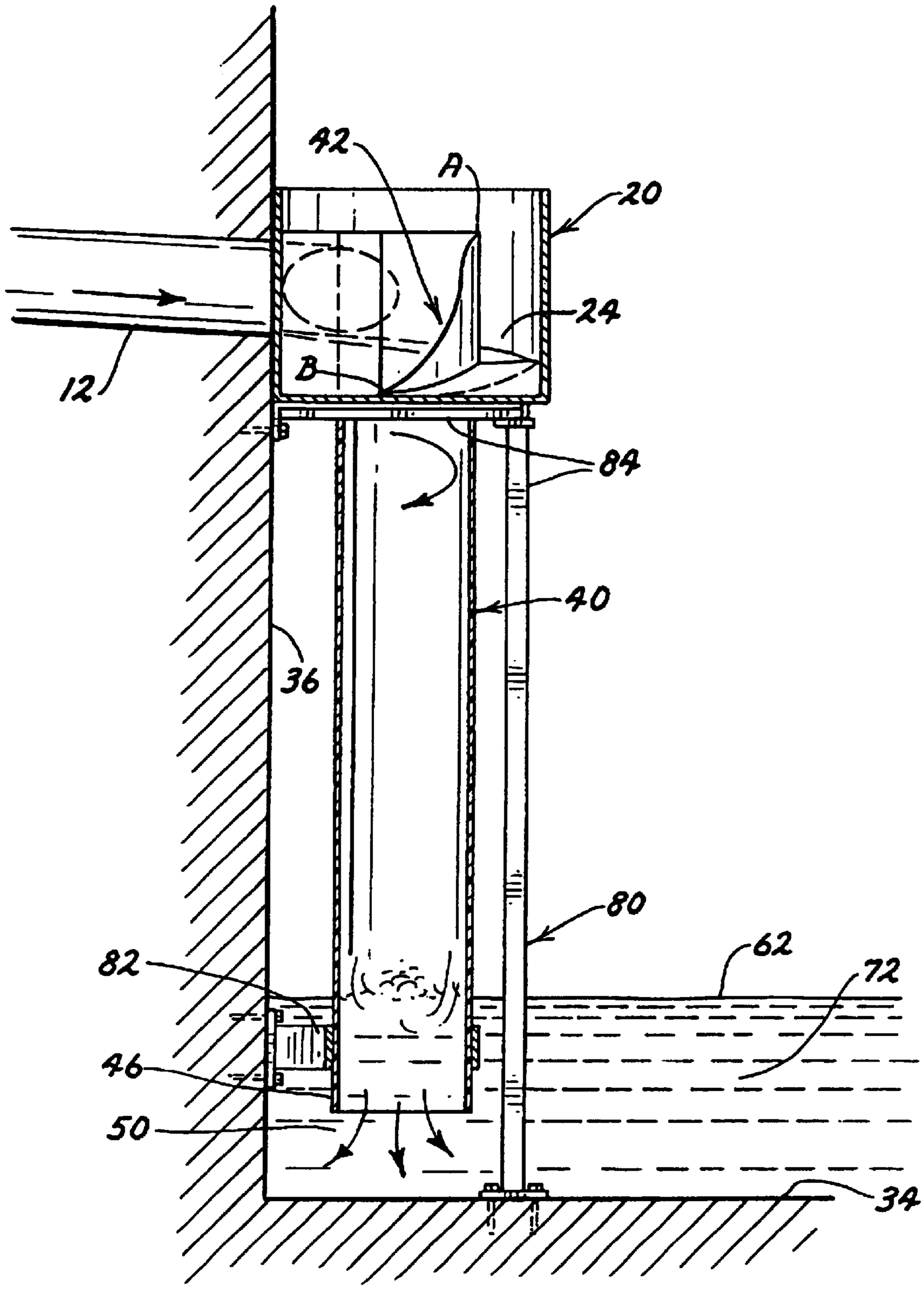

FIG. 4

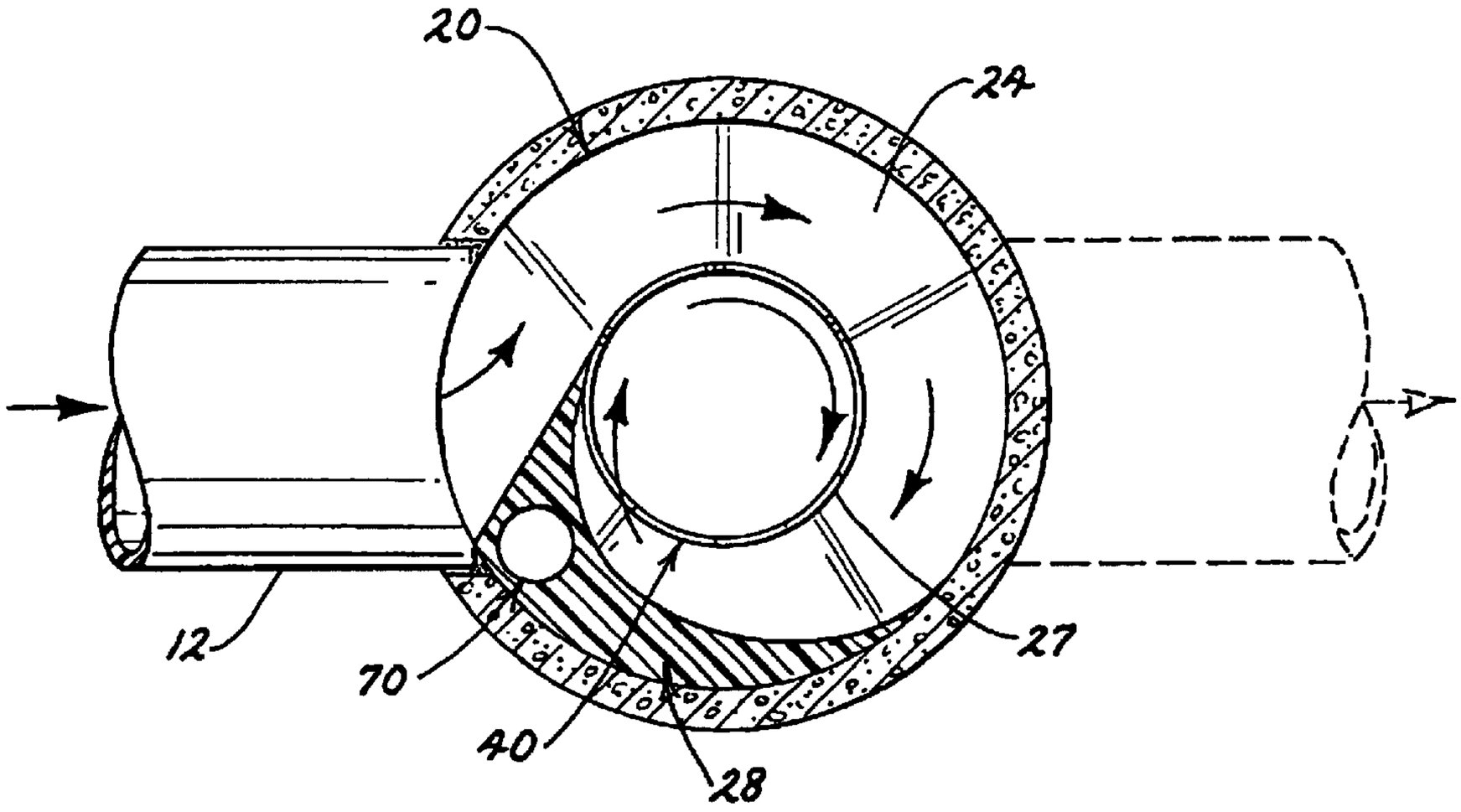

FIG. 5

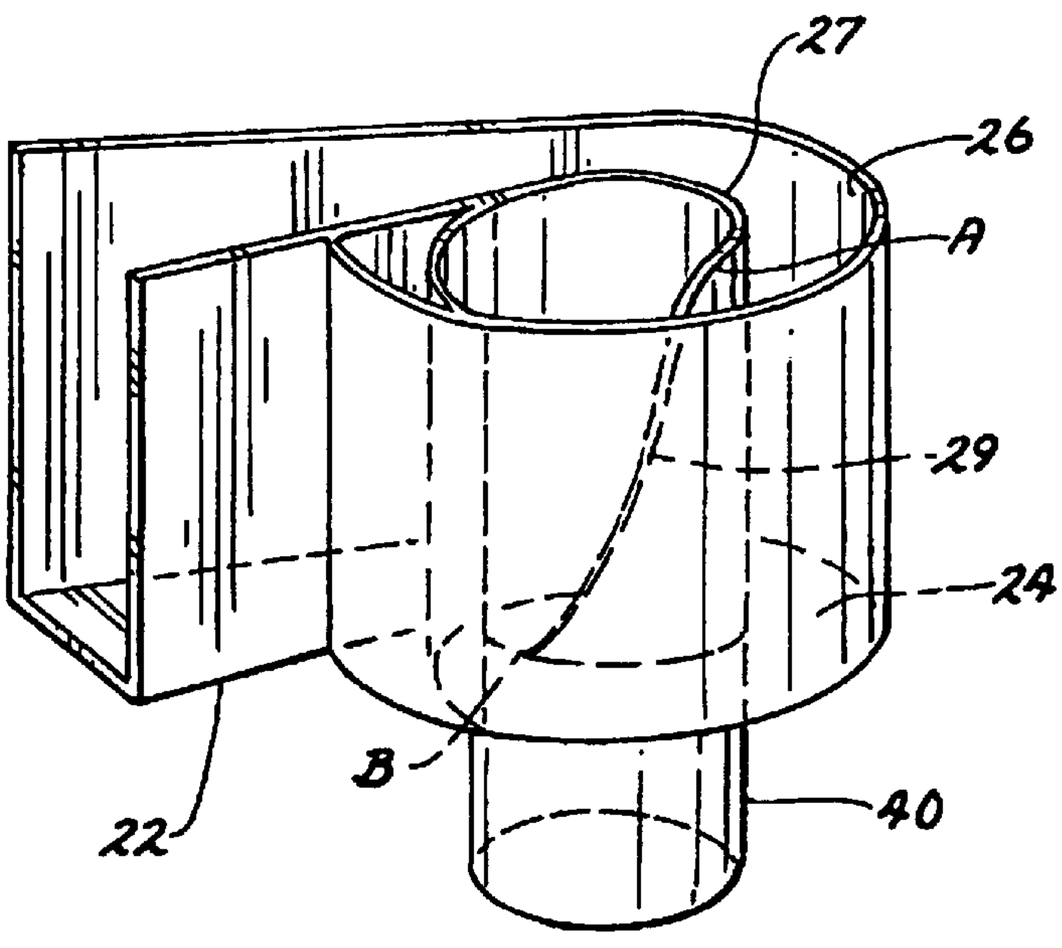

FIG. 6

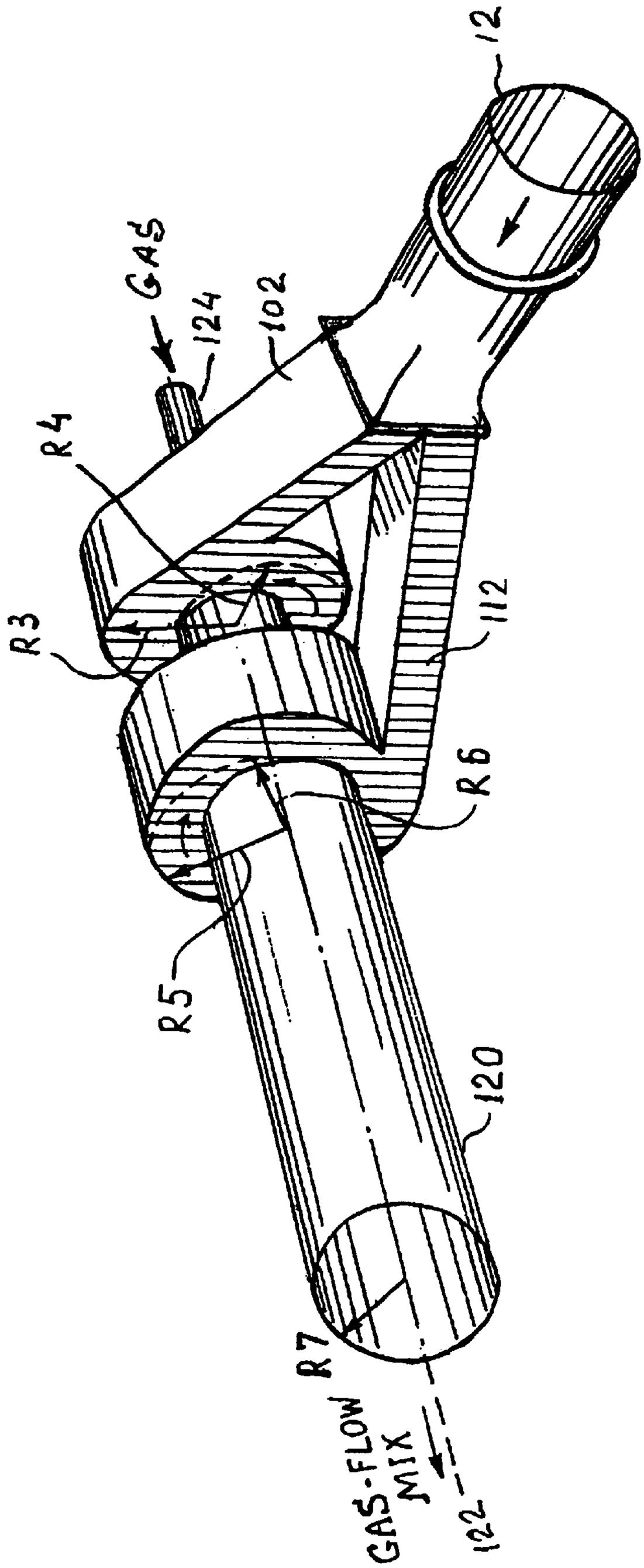

FIG. 7

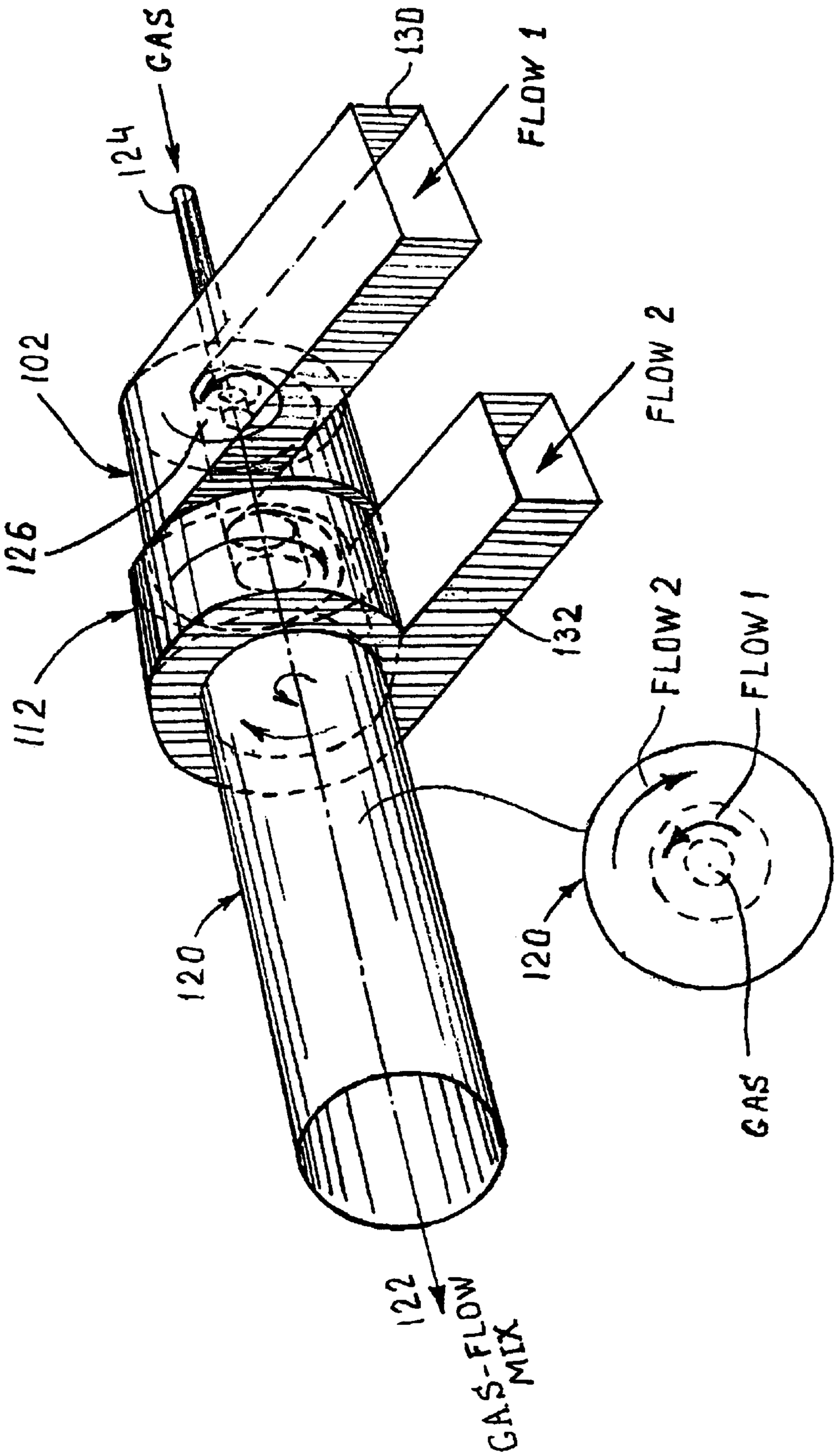
GAS
124
130
FLOW 1
102
126
112
132
120
122
GAS-FLOW MIX
FLOW 2
FLOW 1
120

FIG. 8

METHOD AND APPARATUS FOR MIXING FLUIDS

Matter enclosed in heavy brackets [ ] appears in the original patent but forms no part of this reissue specification; matter printed in italics indicates the additions made by reissue.

This application [claims the benefit of] *is a continuation-in-part* of U.S. patent application Ser. No. 09/561,999 filed May 1, 2000, now U.S. Pat. No. 6,419,843 *B2* which claimed the benefit of provisional patent application No. 60/135,476 filed May 24, 1999.

FIELD OF USE

The invention relates generally to applications whereby it is desirous to introduce or reintroduce gas with liquid flowing through pipes, and/or mix two fluids within a pipe. In particular, this method can be used, but is not so limited, to mix and entrain air and other odorous gas emissions into sewage to reduce odorous gas emissions and to reduce hydrogen sulfide corrosion and abrasive wear in waste water conveyance, collection and treatment systems.

BACKGROUND OF THE INVENTION

Throughout past decades, sewers have been utilized to efficiently transport waste water or sewage from locations where it was generated to waste water treatment plants and other destinations. These sewers consist generally of pipelines locate below ground level and oriented with a slight downward grade in the direction of the sewage flow. Gravity acts upon the sewage to cause it to flow within the pipelines toward its ultimate destination. These pipelines are sometimes interconnected by "drop structures" that allow the sewage to flow from one line into the drop structure, drop vertically therewithin, and then to flow out of the drop structure into additional pipes or other structures.

One problem that occurs during the transport of sewage is the release of sulfides from the sewage. Sulfides form as a result of bacterial reduction of sulfates within the sewage in an anaerobic environment. As sewage ages, the level of sulfides increases. Drop structures within a sewer system can provide a beneficial aeration of the sewage flow by introducing additional dissolved oxygen into the flow. The dissolved oxygen reacts with the sulfides, resulting in less chemical volatility in the sewage. This aeration is particularly beneficial where the sewage is fresh and contains a relatively small amount of dissolved sulfides, such as hydrogen sulfide (H_2S).

Unfortunately, in most practical applications, sewage contains a significant amount of potentially volatile dissolved molecular hydrogen sulfide gas. Turbulence within the sewage flow can cause this dissolved gas to be released into the surrounding air. Significant sources of turbulence in sewage flow, and hence the emission of hydrogen sulfide gas in a sewer, occur in drop structures such as interceptor drop maintenance holes, joint structures, forcemain discharges and wet well drops in sewer pumping stations. Thus, while drop structures can reintroduce dissolved oxygen into the sewage flow, lowering the level of hydrogen sulfide gas, they can also cause the release of hydrogen sulfide gas. The hydrogen sulfide emissions often cause corrosion with the drop structures and adjacent sewer lines, and cause odor problems even the most elegant, pristine neighborhoods.

One known type of drop structure comprises an influent line, a maintenance hole and an effluent line. The influent line runs almost horizontally at a relatively shallow depth below the ground surface in the form of a pipe. The maintenance hole is located below the street level maintenance hole manhole cover. The maintenance hole is generally cylindrical in shape with a vertical longitudinal axis. The effluent line is another almost horizontal pipe that exits slightly above the bottom of the maintenance hole. Turbulent waste water flow is created when the sewage, which has a substantial amount of potential energy, exits from the influent line near the top of the maintenance hole and tumbles down like a waterfall to the side wall and base of the maintenance hole. Then the sewage pools and eventually flows out the effluent line. This turbulent action releases hydrogen sulfide gas into the air. To reduce the problem of gas release, while still allowing beneficial aeration of the sewage, the potential and kinetic energy in the sewage must be dissipated.

One known method is to create a wall hugging spiral flow down the maintenance hole to dissipate the energy by friction. The spiral flow is generated by the insertion of a vortex form connected to the influent line near the top of the maintenance hole. The vortex form is generally helical in shape and is placed directly below the manhole cover near the top of the maintenance hole. The vortex form channels and diverts the flow from its languid state into a spiral flow descending down the cylindrical wall of the maintenance hole. The vortex form can be made of concrete with applied protective coating, or made of a noncorrosive material, metal or plastic, such as PVC, High Density Polyethylene (HDPE) or other like materials. The vortex form may be manufactured at the factory or on-site.

Two problems remain to be solved when applying this known method of using a vortex form in a drop structure for sewage flows. First, the upstream flow velocities within the influent line are usually not large enough to create a stable spiral flow on the vertical wall of a typical maintenance hole. Thus, the flow, rather than continuing to spiral down the cylindrical wall of the maintenance hole, will generally revert to a turbulent descending flow similar to waterfall, losing the effective energy dissipation of the spiral flow and releasing significant amounts of hydrogen sulfide gas into the air. Second, quite often the maintenance hole is used for additional lateral influent connections at elevations lower than the main influent pipe. Consequently, the lateral influent connections disrupt the spiral flow and create a turbulent waterfall of sewage to the bottom of the maintenance hole, again releasing significant amounts of hydrogen sulfide gas into the air. The additional influent pipe may run in any direction, but at a lower depth than the main influent pipe.

SUMMARY OF INVENTION

It, therefore, is an object of this invention to provide a method for reducing gas emissions of a fluid through the entraining and mixing of gas with the liquid.

It is also an object of this invention to provide a method for mixing gas with one or more fluids in a conduit.

Another object of this invention is to provide a method for use in sewer drop structures that significantly reduces odorous gas emissions from the sewer.

A further object of the invention is to reduce hydrogen sulfide corrosion in waste water conveyance, collection and treatment systems.

A benefit of this invention is the improved way in which the method helps to protect conveyance or collection systems from abrasive wear.

Another benefit is the way the invention in particular improves the quality of wastewater by wastewater aeration.

The foregoing objects and benefits of the present invention are provided by a method for reducing gas emission and for entraining and mixing gas with liquids. The method comprises channeling a fluid flow though one or more pipes, introducing the flow from the pipe(s) into a conduit or chamber through the use of spiral flows of predetermined radii, reducing such radii to increase centrifugal forces acting upon the flow, introducing gas into the reduced radius flow and continuing the reduced radius flow within the conduit until the gas is substantially entrained within the flow. This method can be implemented through the use of a maintenance hole and an influent line for carrying liquid to the maintenance hole, a vortex form which accepts the liquid from the influent line, the vortex form comprising a spiral channel of decreasing radius disposed substantially within the maintenance hole, and a conduit also disposed within the maintenance hole and fluidly connected to the vortex form and extending substantially downwardly from the vortex form to a flow exit near the maintenance hole base. The fluid flowing from the influent line enters the vortex form and is channeled by the vortex form into a spiral flow with a radius smaller than the maintenance hole wall radius. The reduction in the radius of the channel outer wall causes the centrifugal forces acting upon the fluid flow to increase, forcing the flow to continue in intimate contact with the outer wall of the channel. The fluid then flows from the reduced radius of the vortex channel into the conduit and, aided by gravity and the flow's acquired rotational velocity, continues its spiral descent towards the maintenance hole base, in substantially intimate contact with the conduit wall. The spiral flow then exits the conduit near the maintenance hole base into an energy dissipating pool.

The method creates an accelerated fluid flow sufficient to create substantial intimate contact with the vortex form and conduit wall throughout the fluid flow's descent in the maintenance hole. This intimate contact creates frictional forces that reduce the kinetic energy of the flow and inhibit turbulent flow. The reduction in turbulent flow in turn reduces the release of gases, including hydrogen sulfide. In addition, the spiral flow in the conduit creates an air core with reduced pressure in the center of the conduit, inhibiting the escape of any hydrogen sulfide gas into the environment and encouraging the reintroduction of any escaped gas back into the spiral flow and the energy dissipating pool.

In another embodiment of the invention, two influent lines may be used to channel the same or separate flows into the same conduit at two different but proximate locations. The influent lines can originate from a single line or from two distinct lines and may contain the same or different fluids. The flows are then introduced into the conduit through reducing-radius vortices in opposing rotational direction.

In certain embodiments of the invention, it may be advantageous to utilize a vortex form channel with a downwardly sloping base sufficient to create an accelerating spiral flow. The method may also utilize a vortex form incorporating an entrance flume designed to accept the fluid flow from the influent line and more gently direct the flow into the vortex channel. This entrance flume may also incorporate a slope to create an accelerating flow into the vortex channel.

The invention also contemplates utilizing in certain applications of the invention various conduit base configurations for allowing the fluid flow to exit the conduit into the energy dissipating pool. These flow exit paths vary based on the desired fluid flow rates, the energy dissipating pool depth, and the existence and configuration of any effluent lines running from the conduit.

While this invention is particular useful in wastewater conveyance systems, it is not so limited, and can be applied

to any system where one desires to mix and entrain one or more gases, including air, into one or more fluid flows within a conduit. Additional applications for the present invention include aeration and/or purification of water in wastewater treatment plants, fishery basins, and natural streams, lakes and bays, and heat transfer in power plant cooling basins. This invention may also be applied to mix food and beverage liquids; to mix constituents in pharmaceutical applications, including applications to suspensions and emulsions; and to mix construction materials including insulation materials, fillers, and high-air concentration mortars and concrete. Thus, the particular embodiments discussed below are not exhaustive and are not intended to limit the scope of this invention.

BRIEF DESCRIPTION

Other objects, features, and advantages of the present invention will become more fully apparent from the following detailed description of certain embodiments, the appended claims, and the accompanying drawings in which:

FIG. **1** is a side elevation, cross-sectional, view of one embodiment of the present invention with a portal-type flow exit;

FIG. **2** is the cross-sectional view A—A of the embodiment illustrated in FIG. **1**;

FIG. **3** is perspective view of another embodiment of the present invention with a flow exit comprising a plurality of legs;

FIG. **4** is a side elevation view of an additional embodiment of the present invention with a suspended flow exit;

FIG. **5** is a top plan view of a portion of an influent line and a vortex form;

FIG. **6** is a perspective view of one embodiment of the vortex form;

FIG. **7** is a perspective view of another embodiment of the present invention using two vortex forms from a single influent line;

FIG. **8** is a perspective view of another embodiment of the present invention using two vortex forms from two influent lines.

DETAILED DESCRIPTION OF THE INVENTION

FIG. **1** illustrates in a side elevation view one embodiment of a sewer apparatus **10** constructed in accordance with the present invention. Referring to FIG. **1**, the sewer apparatus **10** includes an influent line **12**, a vortex form **20**, a maintenance hole **30**, a conduit **40**, a flow exit **50**, and an effluent line **60**.

The maintenance hole **30** in which the vortex form **20** is disposed may be identified from street level as being below a manhole cover **32**. FIG. **1** shows the maintenance hole **30** as being cylindrical in shape and oriented vertically. A lateral line **33** for inputting additional city sewer flowage into the maintenance hole **30** may be disposed below the influent line **12**. The base **34** and walls **36** of the maintenance hole **30** are generally concrete. An energy dissipating pool **72**, comprised of sewage, forms at the base **34** of the maintenance hole **30**. An effluent line **60** is connected to the maintenance hole **30** near the top level of the energy dissipating pool **72**.

As illustrated in FIG. **1**, sewage flows from the influent line **12** into the vortex form **20** near the top of a maintenance hole **30**. The influent line **12** is generally a cylindrical pipe running slightly below the ground surface. To create an accelerated flow of sewage, a portion of the influent line **12**

can be set at a predetermined downward sloping orientation. Such an orientation is shown in FIG. **3**. The slope necessary to create a constant or accelerating velocity is known as the critical or supercritical slope, respectively. A critical slope in which the velocity of the sewage flow would remain constant is identified as having a Froude Number (Fr) equal to one. A supercritical slope in which the sewage flow is accelerating is identified as having a Froude Number greater than one (Fr>1). The Froude Number is calculated using the formula $Fr=V/(g*d)^{1/2}$, where V represents average sewage flow velocity, d represents flow depth and g represents acceleration due to gravity, approximately 32.2 feet per second squared. Each of these factors can effect the critical slope of the influent line **12**. While the critical slope will generally occur around one to three percent, it is envisioned that the desired slope could vary anywhere from one percent or more. In the embodiment illustrated in FIG. **3**, the influent line **12** descends at a supercritical slope of about ten percent slope to create an accelerated flow.

Referring again to FIG. **1**, the influent line **12** connects to the vortex form **20** and maintenance hole **30** near the top of the maintenance hole **30**. The vortex form **20** is disposed within the maintenance hole **30** for receiving the sewage from the influent line **12** and is generally shaped to create a descending spiral flow. FIG. **12** presents the cross-sectional view A—A of FIG. **1**, illustrating the vortex form in further detail. Referring to FIG. **2**, the vortex form **20** includes a vortex channel **24**, and may in certain embodiments also include an entrance flume **22**. In the embodiment of the present invention shown in FIG. **1**, the entrance flume **22** is fluidly connected to the influent line **12**. The entrance flume **22** can take any shape capable of transporting the sewage from the influent line **12** to the vortex channel **24**. In the embodiment illistrated in FIG. **1**, the entrance flume **22** consists of a base **21** and side walls **23**. The vortex channel **24** is fluidly connected to the entrance flume **22** and comprises a base **25**, an outer wall **26**, and an inner wall **27**. While the specific vortex channel shown utilizes a flat base **25** with substantially vertical side walls **26** and **27**, it is envisioned that these structures could take on any shape capable of transporting the sewage in a spiral flow.

The vortex form **20** may be made of concrete with applied protective coating, or made of a noncorrosive material, metal or plastic, such as PVC, High Density Polyethylene (HDPE) or other like materials. The vortex form **20** may be made in advance at the factory or on-site. As shown in FIGS. **3** and **4**, the entrance flume **22** and/or vortex channel **24** may be manufactured and oriented with their bases having a supercritical slope, allowing the sewage to accelerate as it flows through the vortex form **20**. The selected slopes of the influent line **12**, the entrance flume base **21**, the vortex channel base **25** will not necessarily be the same. In the embodiment illustrated in FIG. **1**, the influent line **12** is substantially horizontal, while the entrance flume base **21** and the vortex channel base **25** have a supercritical slope of about ten percent.

As noted, while the embodiment shown in FIGS. **1** and **2** illustrate a vortex form containing an entrance flume **22**, other embodiments of the present invention may fluidly connect the vortex channel **24** directly to the influent line **12**, omitting the use of the entrance flume **22**. Examples of such embodiments are shown in FIGS. **3**, **4**, and **5**.

Referring to FIG. **2**, the vortex channel **24** directs the sewage flow into a substantially spiral flow. The vortex channel **24** also reduces the radius of this spiral flow in order to increase the centripetal forces acting upon the flow. This is accomplished through the reduction in radius of the outer wall **26**, which will increase the centripetal forces applied by the outer wall **26** on the spiral flow. In the embodiment shown in FIG. **2**, a radius transition section **28** supports the outer wall **26** and reduces the radius of the spiral flow created by the vortex channel **24** (shown in FIG. **2** as R**1**) to the radius of the conduit **40** (shown as R**2**). The radius transition section **28** also aids in directing the flow from the vortex channel **24** into the conduit **40**. The radius transition section **28** is generally made of a noncorrosive metal or plastic with concrete or a foam fill material.

To allow the sewage flow to enter the conduit **40**, inner wall **27** must include a height transition section **29** (identified on FIGS. **2**, **4**, and **6** as section A–B) which allows the sewage flow to enter the conduit **40**. It is envisioned that this transition section could take many forms, including a sharp vertical cut or a gradual decrease in wall height. It has been found to be advantageous, however, to fabricate inner wall **27** such that its height profile reflects an axial flow velocity distribution. This type of cut is illustrated in FIG. **6**.

Referring again to FIG. **1**, conduit **40** is disposed within maintenance hole **30** and fluidly connected to vortex channel **24**. Conduit **40** comprises a pipe wall **45** having a radius smaller than maintenance hole **30** and extending substantially downwardly from vortex form **20**. Conduit **40** further comprises a base **46**, and a flow exit path **50** near said maintenance hole base. The upper portion of the pipe wall **45** may be constructed integrally with inner wall **27**.

Still referring to FIG. **1**, the sewage spirals and falls from vortex channel **24** into conduit **40**, along the inner surface **47** of pipe wall **45**. This flow continues to descend along the inner surface **47** of pipe wall **45** in a substantially spiral fashion until the sewage nears the conduit base **46**. The conduit base **46** is disposed below the surface of the energy dissipating pool **72** and at or above the base **34** of the maintenance hole **30** to create a flow exit path **50**. The sewage flow accumulates in the conduit base where it eventually flows through the flow exit path **50**, located at or near the conduit base **46**, into the energy dissipating pool **72** near the bottom of the maintenance hole **30**.

The flow exit path **50** may comprise any structure that allows the sewage flow to exit the conduit **40** at a predetermined flow rate. One example of a flow exit path is shown in FIG. **1**, comprising a portal **56** in the conduit base **46**. The portal **56** allows the sewage flow that has accumulated in the conduit base **46** to exit into the energy dissipating pool **72**. Additional embodiments of the flow exit path **50** are shown in FIGS. **3** and **4**. In FIG. **3**, the flow exit path **50** comprises a plurality of legs **52** connected to and supporting the conduit base **46**. The plurality of legs **52** are themselves supported by the maintenance hole base **34**. The plurality of legs **52** allows the sewage flow within the conduit base **46** to be fluidly connected to the energy dissipating pool **72** and allows the sewage flow to exit the conduit base **46** at a predetermined flow rate. In FIG. **4**, the flow exit path **50** comprises a suspended conduit support **80**. The suspended conduit support **80** includes a conduit anchor **82** and a vortex form base support **84**. The vortex form base support **84** is connected to both the maintenance hole side wall **36** and the maintenance hole base **34**, and supports the vortex form **20** and conduit **40** in a suspended fashion. The conduit anchor **82**, comprising a rigid structure capable of securing the conduit **40**, is connected to the maintenance hole side wall **36** and provides horizontal support for the conduit **40**. The conduit support **80** allows the conduit **40** to be suspended above the maintenance hole base **34**, thus allowing the sewage flow to exit the conduit **40** at the conduit base **46** and enter the energy dissipating pool **72**.

Once the flow has reached the energy dissipating pool **72**, it may be drawn away for further transport though an effluent line **60**, as shown in FIG. **1**. In another embodiment, shown in FIG. **4**, the sewage flow may be drawn into a treatment pool **62** for further treatment.

As illustrated in FIG. **3**, the present invention may utilize an air relief **70** to equalize substantially the air pressure within the maintenance hole **30** above the vortex form **20** with the air pressure within the maintenance hole **30** below the vortex form **20** and within the effluent line **60**. Air relief **70** comprises a pipe connecting the top portion of the effluent line **60** with the maintenance hole **30** above the vortex form **20**. The air relief **70** substantially equalizes the air pressures in the upper influent line **12** and the lower effluent line **60**, drawing the air from the higher pressure influent line **12** downward to the lower pressure effluent line **60**. This pressure equalization, by drawing the air through the air relief **70** into the effluent line **60**, further prevents the leakage of noxious gases not absorbed by the sewage flow within the maintenance hole **30**. These gases, dragged by the influent flow and not consumed by the spiral flow, would otherwise rise and emit from the improved sewer apparatus into the neighborhood. As illustrated in FIG. **5**, in another embodiment the air relief **70** comprises a pipe extending through the vortex form, providing a path for the air to travel from the higher pressure area above the vortex form **20** to the lower pressure area below the vortex form **20**. The air relief **70** of this embodiment acts in the same fashion as the previously described embodiment to prevent the leakage of noxious gases not absorbed by the sewage flow within the maintenance hole **30**.

Referring to the embodiment illustrated in FIG. **1**, in operation, incoming sewage at a small slope enters the vortex form **20** at the entrance flume **22** and descends through the vortex channel **24**. The supercritical slope of the entrance flume **22** and the vortex channel **24** provides rising flow velocities with a partial potential energy transition into kinetic energy. Even though sewage flow encounters a narrowing of the cross-section of the entrance flume **22**, the water level generally does not rise due to the flow acceleration created by the supercritical slope of the base **21**. The flow is then directed within the vortex channel **24** by the radius transition section **28** and the height reduction section **29** of the inner wall **27** into a smaller radius conduit **40**.

The sewage flow then spirals downwardly against the inside wall of the conduit **40**, creating a low pressure air core running longitudinally in the center of the conduit **40**. The low pressure air core draws air from the maintenance hole **30** above the vortex form **20** into the conduit **40**. Some of the oxygen in the air core mixes with and becomes entrained in the sewage flow, reacting with the potentially volatile dissolved hydrogen sulfide gas (H_2S) in the liquid sewage to produce hydrogen sulfate (H_2SO_4) in the solution. This reaction prevents hydrogen sulfide gas from being released into the air and then onto sewer surfaces where corrosion can occur or into the above ground neighborhood as a foul gas. The conduit **40** also helps to dissipate the high velocities and kinetic energy of the sewage flow by friction between the descending spiral flow and the conduit wall **45**. This energy reduction through friction reduces flow turbulence and thus hydrogen sulfide gas emission from the waste water liquid into the surrounding air. Without losing the flow's integrity, the gravity flow is transformed into a flow with combined gravity and centrifugal forces.

The sewage flow completes its downward spiral near the conduit base **46**, where the most intensive processes of flow mixing and aeration occur. The sewage air-flow mixture then flows out of the conduit base **46** through a flow exit **50** into an energy dissipating pool **72** for further internal mixing and friction. At the top surface of the energy dissipating pool **72** is a generally tranquil flow that leaves the maintenance hole **30** via the effluent line **60**.

As shown in FIGS. **7** and **8**, other embodiments of the invention can also be used to mix and entrain gas in fluid flow within a conduit **120**. In FIG. **7**, flow is channeled through influent line **12** into separate vortex forms **102** and **112**. Influent line **12** is generally a cylindrical pipe, but can take any cross-sectional shape. Depending upon the flow acceleration desired in the vortex forms **102** and **112**, the influent line **12** and the vortex forms **102** and **112** can be oriented at a variety of slopes. In addition, fluid flow pumps (not shown), known in the prior art, can be utilized to accelerate the flow within the influent line **12**. In FIG. **7**, the influent line **12** is shown substantially horizontal.

The influent line **12** is fluidly connected to both vortex forms **102** and **112**. Each vortex form **102** and **112** is positioned to receive a portion of the flow from influent line **12** and each is generally shaped to create a spiral flow about the centerline **122** of conduit **120**. Vortex form **112** is positioned proximate to and downstream of vortex form **102**. In practice, it is beneficial to direct the spiral flow of vortex form **112** in a direction opposing the spiral flow created in vortex form **102**. As described in the previous embodiments, the vortex form **102** directs the fluid into a spiral of a predetermined radius (shown as R**3**) greater than the radius (shown as R**7**) of the conduit **120** and subsequently reduces the radius of the spiral flow (shown as R**4**) to be equal to or less than radius R**7** of the conduit **120** to increase the centrifugal forces acting upon the fluid. Vortex form **112** directs the flow in a similar manner, creating spiral flow of predetermined radius (shown as R**5**) and reducing the radius of a that spiral flow (shown as R**6**).

Conduit **120** is fluidly connected to vortex forms **102** and **112** and extends downstream away from the vortex forms **102** and **112**. The downstream extension of conduit **120** may be oriented in any position from substantially horizontal to downwardly vertical, depending upon the application. Conduit **120** may also extend upstream of vortex form **102**. Conduit **120** includes an air intake **124** upstream of vortex form **102** that allows air or other gases to enter into conduit **120** and mix with flows delivered by vortex forms **102** and **112** within conduit **120**. In FIG. **7**, the air intake **124** is a pipe, but could in other embodiments take any form allowing the flow of air or gases into the conduit **120** upstream of vortex form **102**. The spiral flows created by vortex forms **102** and **112** create a column of air or gas that is drawn through the air intake **124** and causes a portion of the air or gas to mix with and become entrained in the fluid flow. The conduit **120** must extend far enough downstream to allow such mixing and entrainment.

The embodiment in FIG. **8** also uses vortex forms **102** and **112** to create two spiral flows. However, in FIG. **8**, each vortex form **102** and **112** receives fluid from separate influent lines **130** and **132**. The influent lines **130** and **132** may deliver the same or different fluids, and the densities of each fluid may differ. Conduit **126** is disposed within conduit **120** about centerline **122**, and receives flow from vortex form **102**. Conduit **126** can be formed separate from or integral with vortex form **102**. Conduit **126** ends proximate to vortex form **112**. Gas mixes with the spiral flow from vortex form **102** within conduit **126**. The spiral flow and gas within conduit **126** then empty into conduit **120** and mix with the spiral flow created by vortex form **112**. It is again beneficial to direct the spiral flows from vortex forms **102** and **112** in

opposing directions to enhance the mixing and entrainment of the gas and fluids.

This description is intended to provide specific examples of individual embodiments which clearly disclose the present invention. By way of example only, and without limitation, the present invention could find use in drop structures having other than a circular or cylindrical configuration, thus freeing designers to construct such structures according to need. This invention can also be used in non-sewer applications where one seeks to mix gas and fluid within a conduit. Accordingly, the invention is not limited to the described embodiments, or to the use of the specific elements described therein. All alternative modifications and variations of the present invention which fall within the spirit and broad scope of the appended claims are covered.

What is claimed is:

1. A method for reducing gas emissions from fluid traveling through drop structures having a wall and a base, said method comprising:

channeling the fluid within the drop structure **[**into**]** *through a flow channel that forms* a spiral flow of predetermined *maximum outer* radius *and predetermined minimum inner radius*;

reducing said spiral flow predetermined *maximum outer* radius to increase the centrifugal forces acting upon the fluid; and

continuing said reduced radius spiral flow, with the aid of gravity, to or near the drop structure base.

2. The method of claim **1**, *wherein the channeling of the fluid through the flow channel includes channeling the fluid in a spirally downward sloping direction, and wherein the method* further **[**comprising**]** *comprises*:

providing air access to the drop structure to allow mixing of the air with said spiral flow.

3. A method for entraining and mixing air or another gas with liquid traveling within a conduit, said method comprising:

channeling a first portion of the liquid within a first influent line into a first spiral flow of first predetermined radius around the centerline of said conduit;

channeling a second portion of the liquid within said first influent line into a second spiral flow of second predetermined radius around said centerline of said conduit downstream of said first spiral flow and having a rotational direction opposing said first spiral flow;

reducing each of said first and second spiral flows predetermined radii to increase the centrifugal forces acting upon each of said spiral flows; and

providing air or other gas access to said conduit upstream of and proximate to said first spiral flow

so that the a portion of the air or other gas mixes with and becomes entrained in said spiral flows.

4. The method of claim **3**, including a second influent line, wherein said first and second spiral flows are channeled from said first and second influent lines, respectively.

5. The method of claim **4**, wherein the said air or gas access is provided though a pipe centered about said centerline of said conduit.

6. The method of claim **4**, wherein said first spiral flow predetermined radius is reduced to a smaller radius than said second spiral flow predetermined reduced radius.

7. The method of claim **3**, further comprising:

channeling a first portion of a second liquid within a third influent line into a third spiral flow of third predetermined radius around the centerline of said conduit and downstream of said first and second spiral flows;

channeling a second portion of the second liquid within said third influent line into a fourth spiral flow of fourth predetermined radius around said centerline of said conduit downstream of said third spiral flow and having a rotational direction opposing said third spiral flow; and

reducing each of said third and fourth spiral flows predetermined radii to increase the centrifugal forces acting upon each of said spiral flows;

so that said third and fourth spiral flows mix with said first and second spiral flows.

8. The method of claim **7**, further comprising:

channeling additional liquid or liquids within a one or more additional influent lines into additional spiral flows of predetermined radii around the centerline of said conduit and downstream of said first and second spiral flows; and

reducing each of said additional spiral flows predetermined radii to increase the centrifugal forces acting upon each of said additional spiral flows;

so that said additional spiral flows mix with said first and second spiral flows.

9. A method for entraining a mixing air or another gas with liquid traveling within a conduit, said method comprising:

channeling a first portion of the liquid within a first influent line into a first spiral flow of first predetermined radius around the centerline of said conduit;

channeling a second portion of the liquid within said first influent line into a second spiral flow of second predetermined radius around said centerline of said conduit downstream of said first spiral flow and having the same rotational direction as said first spiral flow;

reducing each of said first and second spiral flows predetermined radii to increase the centrifugal forces acting upon each of said spiral flows; and

providing air or other gas access to said conduit upstream of and proximate to said first spiral flow

so that the a portion of the air or other gas mixes with and becomes entrained in said spiral flows.

10. The method of claim **9**, including a second influent line, wherein said first and second spiral flows are channeled from said first and second influent lines, respectively.

11. The method of claim **10**, wherein the said air or gas access is provided though a pipe centered about said centerline of said conduit.

12. The method of claim **10**, wherein said first spiral flow predetermined radius is reduced to a smaller radius than said second spiral flow predetermined reduced radius.

13. The method of claim **9**, further comprising:

channeling a first portion of a second liquid within a third influent line into a third spiral flow of third predetermined radius around the centerline of said conduit and downstream of said first and second spiral flows;

channeling a second portion of the second liquid within said third influent line into a fourth spiral flow of fourth predetermined radius around said centerline of said conduit downstream of said third spiral flow and having the same rotational direction as said third spiral flow; and

reducing each of said third and fourth spiral flows predetermined radii to increase the centrifugal forces acting upon each of said spiral flows;

so that said third and fourth spiral flows mix with said first and second spiral flows.

14. The method of claim 13, further comprising:

channeling additional liquid or liquids within a one or more additional influent lines into additional spiral flows of predetermined radii around the centerline of said conduit and downstream of said first and second spiral flows; and

reducing each of said additional spiral flows predetermined radii to increase the centrifugal forces acting upon each of said additional spiral flows;

so that said additional spiral flows mix with said first and second spiral flows.

15. A fluid mixer, comprising:

a flow conduit having a generally cylindrical first wall portion of a first radius centered around a centerline, the first wall portion having a first wall interior surface;

a first vortex form having a first flow channel of decreasing radius that includes a first inlet and a first outlet, wherein the first outlet is fluidly coupled with the flow conduit;

a second vortex form having a second flow channel of decreasing radius that includes a second inlet and a second outlet, wherein the second outlet is fluidly coupled with the flow conduit proximate to the first outlet;

wherein the first and second flow channels are situated and shaped such that, in operation:

fluid exiting the first flow channel is directed into a first spiral flow traveling along the first wall portion of the flow conduit and centered around the centerline, the first spiral flow having an initial outer radius generally equal to the first radius; and

fluid exiting the second flow channel is directed into a second spiral flow centered around the centerline and having an initial outer radius that is smaller than the first radius.

16. The fluid mixer of claim 15, and further comprising:

a third inlet adapted to provide access for an additional fluid to at least one of the first and second spiral flows.

17. The fluid mixer of claim 16, wherein the third inlet is a line having an end positioned in a center of at least one of the first and second spiral flows.

18. The fluid mixer of claim 16, wherein the fluid inlet is a line coupled with a source of air or other gas.

19. The fluid mixer of claim 15, wherein the second spiral flow has a rotational direction opposing the first spiral flow.

20. The fluid mixer of claim 15, wherein a portion of the first spiral flow and a portion of the second spiral flow each defines a relatively low-pressure core.

21. The fluid mixer of claim 15, wherein the flow conduit includes a generally cylindrical second wall portion centered around the centerline and having a second radius that is smaller than the first radius and a second interior wall surface, wherein the second flow channel is shaped and situated such that the second spiral flow is directed to travel along the second interior wall surface of the flow conduit.

22. A method for mixing a plurality of flows in a conduit having a generally cylindrical interior wall surface centered around a centerline, and having an upstream end and a downstream end, the method comprising:

channeling a first flow into a first spiral trajectory around a centerline of the conduit, wherein the first spiral trajectory has a first initial radius and a first final radius that is smaller than the first initial radius;

channeling a second flow into a second spiral trajectory around the centerline of the conduit and proximate to the first spiral flow, wherein the second spiral trajectory has a second initial outer radius and a second final outer radius that is smaller than the second initial outer radius; and

wherein a portion of the first spiral trajectory is situated along the interior wall surface;

so that the first and second spiral flows mix with one another.

23. The method of claim 22, wherein the second spiral trajectory has a rotational direction opposing the first spiral trajectory.

24. The method of claim 22, wherein the second spiral trajectory has a same rotational direction as the first spiral trajectory.

25. The method of claim 22, wherein the second final outer radius is smaller than the first final radius.

26. The method of claim 22, and further comprising:

conveying a first fluid through a first influent line to become the first flow; and

conveying a second fluid that is different from the first fluid through a second influent line to become the second flow.

27. The method of claim 22, and further comprising:

conveying a first fluid through a first influent line to become the first flow; and

conveying the first fluid through a second influent line to become the second flow.

28. The method of claim 22, wherein at least one of the first and second flows is a liquid.

29. The method of claim 22, and further comprising:

providing access for a third flow to the conduit proximate to at least one of the first and second flows.

30. The method of claim 29, wherein the third flow is air or a gas.

31. The method of claim 29, wherein the access for the third flow is provided though a pipe centered about the centerline of the conduit.

32. The method of claim 22, wherein the second final outer radius is of a size such that a portion of the second trajectory is circumscribed by a portion of the first trajectory.

33. The method of claim 22, and further comprising:

channeling a third flow into a third spiral trajectory around the centreline of the conduit and proximate to the first and second spiral flows, wherein the third spiral trajectory has a third initial outer radius and a third final outer radius that is smaller than the third initial outer radius.

34. A liquid conveyance arrangement for conveying flow from an inlet at a relatively higher elevation to an outlet at a relatively lower elevation, comprising:

a vortex form situated proximate to the higher elevation and including a channel having an upstream end and a downstream end, wherein the upstream end of the channel is fluidly coupled with the inlet, and wherein the channel has an initial curvature and a final curvature that is greater than the initial curvature such that, in operation, the flow passing through the channel is accelerated and subjected to centripetal force;

a conduit fluidly connected to the downstream end of the channel of the vortex form, the conduit including a generally cylindrical wall having a diameter that generally corresponds to the final curvature of the channel, wherein the conduit is situated to carry the flow generally downwardly from the vortex form towards the

lower elevation, and wherein the conduit includes a flow exit that is submerged relative to a level of the flow proximate to the outlet.

35. The liquid conveyance arrangement of claim 34, wherein the vortex form channel is generally sloped downwardly such that the flow passing through the channel is redirected along a path having an initial elevation and a final elevation that is lower than the initial elevation.

* * * * *