US00RE37932E

(19) **United States**
(12) **Reissued Patent**
Baldwin et al.

(10) **Patent Number: US RE37,932 E**
(45) **Date of Reissued Patent: Dec. 10, 2002**

(54) **SUPERMICROCELLULAR FOAMED MATERIALS**

(75) Inventors: **Daniel F. Baldwin**, Woodstock, GA (US); **Nam P. Suh**, Sudbury, MA (US); **Chul B. Park**, Toronto (CA); **Sung W. Cha**, Seoul (KR)

(73) Assignee: **Massachusetts Institute of Technology**, Cambridge, MA (US)

(21) Appl. No.: **08/692,060**

(22) Filed: **Aug. 2, 1996**

Related U.S. Patent Documents

Reissue of:
(64) Patent No.: **5,334,356**
Issued: **Aug. 2, 1994**
Appl. No.: **07/934,570**
Filed: **Aug. 24, 1992**

U.S. Applications:
(62) Division of application No. 07/682,116, filed on Apr. 5, 1991, now Pat. No. 5,158,986.

(51) **Int. Cl.**[7] **B32B 27/04**
(52) **U.S. Cl.** ..... **422/133**; 264/455; 264/50; 264/53; 264/DIG. 5; 264/DIG. 13; 422/131; 422/134; 422/135; 422/136; 422/137; 422/138; 426/446; 425/4 C; 521/130
(58) **Field of Search** ..... 422/131, 133, 422/134, 135, 136, 137, 138; 264/45.5, 50, 53, DIG. 5, DIG. 13; 426/446; 425/4 C; 521/130

(56) **References Cited**

U.S. PATENT DOCUMENTS

3,184,419	A	5/1965	Merriman
3,227,664	A	1/1966	Blades et al.
3,227,784	A	1/1966	Blades et al.
3,277,221	A	10/1966	Parrish
3,375,211	A	3/1968	Parrish

FOREIGN PATENT DOCUMENTS

EP	0376064	A2	4/1990
EP	0707935	A2	4/1996
JP	1-209120		8/1989
WO	WO89/00918		2/1989
WO	WO 90/07546		7/1990
WO	WO 92/17533		10/1992
WO	WO 95/24440		9/1995

OTHER PUBLICATIONS

Kolossow, K.D., "Extrusion of Foamed Intermediate Products With Singe–Screw Extruders", *Plastic Extrusion Technology,* pp. 441–449, 1988.

Lacallade, R., Addiitives for Plastics–Chemical Blowing Agents for SF *"Plastics Engineering",* vol. 32, pp. 40–42, Jun. 1976.

Park, C.B. et al., "Cell Nucleation by Rapid Pressure Drop in Continuous Processing of Microcellular Plastics", *Use of Plastics and Plastic Composites: Materials and Mechanics Issues,* MD–vol. 46, pp. 537–552, ASMF 1993.

(List continued on next page.)

Primary Examiner—Krisanne Thornton
(74) *Attorney, Agent, or Firm*—Dike, Bronstein, Roberts and Cushman, Intellectual Property Practice Group of Edwards & Angell, LLP

(57) **ABSTRACT**

A supermicrocellular foamed material and a method for producing such material, the material to be foamed such as a polymerplastic material, having a supercritical fluid, such as carbon dioxide in its supercritical state, introduced into the material to form a foamed fluid/material system having a plurality of cells distributed substantially throughout the material. Cell densities lying in a range from about 10^9 to about 10^{15} per cubic centimeter of the material can be achieved with the average cell sizes being at least less than 2.0 microns and preferably in a range from about 0.1 micron to about 1.0 micron.

(List continued on next page.)

37 Claims, 10 Drawing Sheets

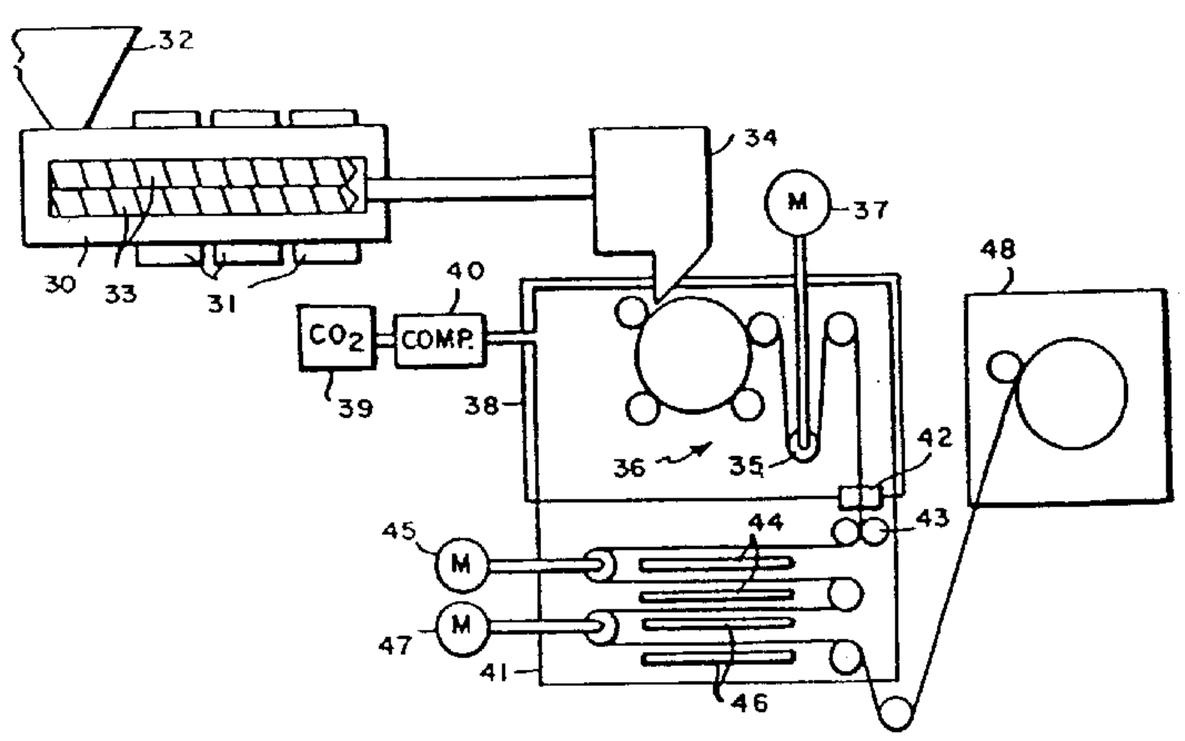

U.S. PATENT DOCUMENTS

3,375,212	A	3/1968	Bonner
3,384,531	A	5/1968	Parrish
3,584,090	A	6/1971	Parrish
3,637,458	A	1/1972	Parrish
3,730,916	A	5/1973	Etchells
3,787,543	A	1/1974	Parrish
3,796,779	A	3/1974	Greenberg
3,812,225	A	5/1974	Hosoda et al.
3,882,209	A	5/1975	Yanagisawa et al.
4,155,969	A	5/1979	Hendry
4,211,523	A	7/1980	Hunerberg
4,255,371	A	3/1981	Shimovashiki et al.
4,390,332	A	6/1983	Hendry
4,424,287	A	1/1984	Johnson et al.
4,454,087	A	6/1984	Havachi
4,455,272	A	6/1984	Schubert et al.
4,456,571	A	6/1984	Johnson
4,473,665	A	9/1984	Martini-Vvedensky et al.
4,548,775	A	10/1985	Hayashi et al.
4,719,246	A	1/1988	Murdoch et al.
4,728,559	A	3/1988	Hardenbrook et al.
4,746,477	A	5/1988	Wecker et al.
4,761,256	A	8/1988	Hardenbrook et al.
4,783,295	A	11/1988	Kearns et al.
4,791,144	A	12/1988	Nagou et al.
4,832,881	A	5/1989	Arnold, Jr. et al.
4,873,218	A	10/1989	Pekala et al.
4,906,672	A	3/1990	Stone et al.
4,990,542	A	2/1991	Motani et al.
5,034,171	A	7/1991	Kiczek et al.
5,064,587	A	11/1991	Meyke et al.
5,064,874	A	11/1991	Motani et al.
5,082,608	A	1/1992	Karabedian et al.
5,110,998	A	5/1992	Muschiatti
5,120,559	A	6/1992	Fizvi et al.
5,133,913	A	7/1992	Miyakawa et al.
5,158,986	A	10/1992	Cha
5,160,674	A	11/1992	Colton et al.
5,250,577	A	10/1993	Welsh
5,266,605	A	11/1993	Welsh
5,866,053	A	2/1999	Park et al.

OTHER PUBLICATIONS

Baldwin, D.F., et al., "A Processing System for the Extrusion of Microcellular Polymer Sheets Sheets: . . . ", Cellular and Microcellular Materials, MD–vol. 53:85–107 (ASME 1994).

LeMay, J.D. et al., "Low Density Microcellular Material", *MRS Bulletin,* Dec. 1990, pp. 19–45.

Cha, S.W., "A Microcellular Foaming/Forming Process Performed at Ambient Temperataure and a Temperature and a Super–Microcellular Foaming Process", (M.I.T. 1994).

Baldwin, D.F., "Microcellular Polymer Processing and the Design of a Continuous Sheet Processing System", Chapter 8, pp. 204, 205, 241, (M.I.T. 1994).

Park, C.B., "The Role of Polymer/Gas Solutions in Continuous Processing of Microcellular Microcellular Polymers", Chapter VII, pp. 128–130.

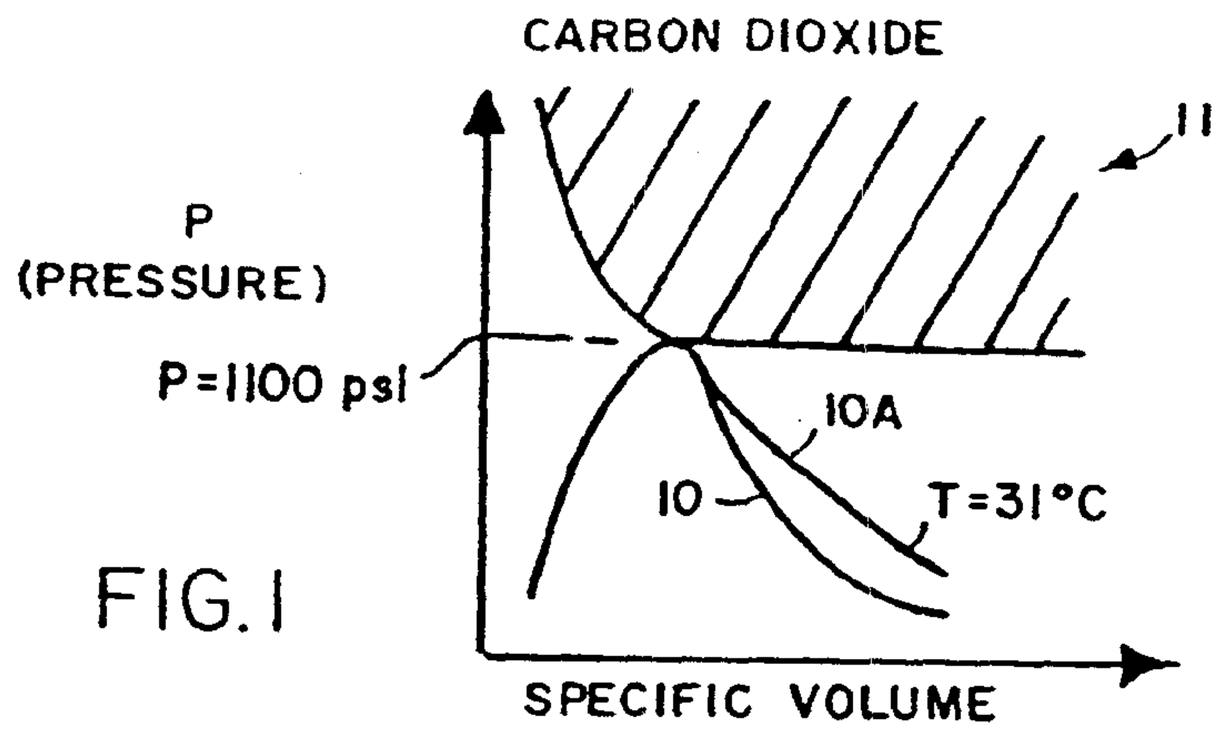

FIG. 1

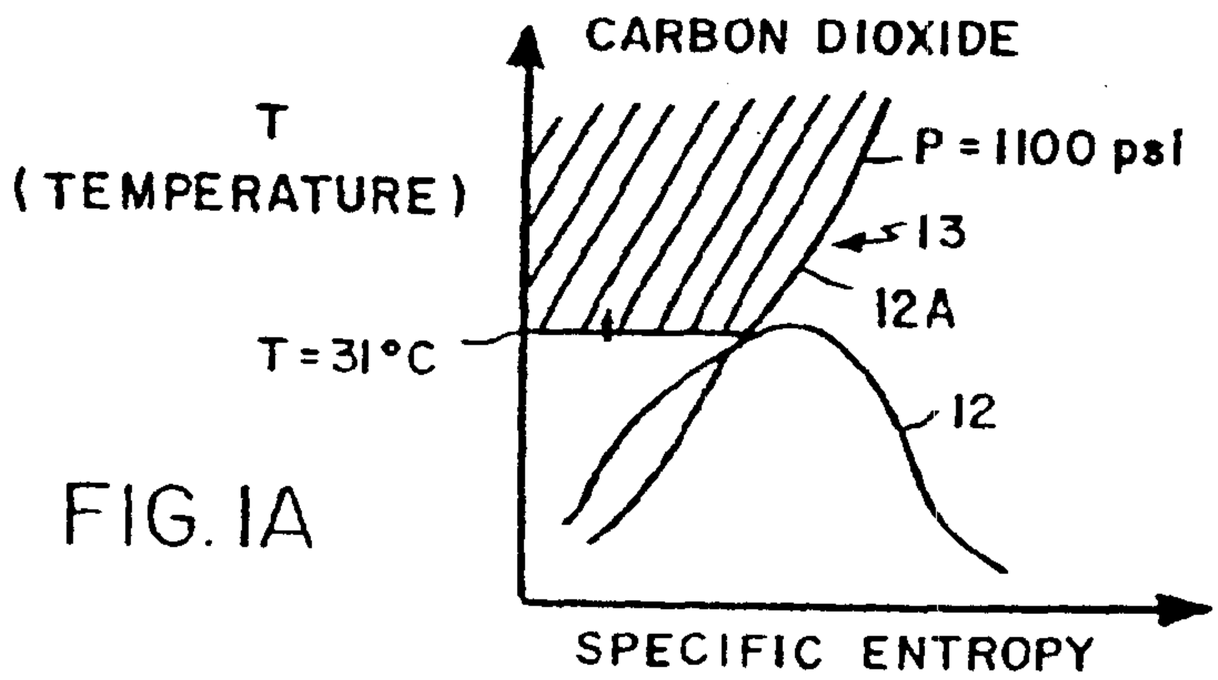

FIG. 1A

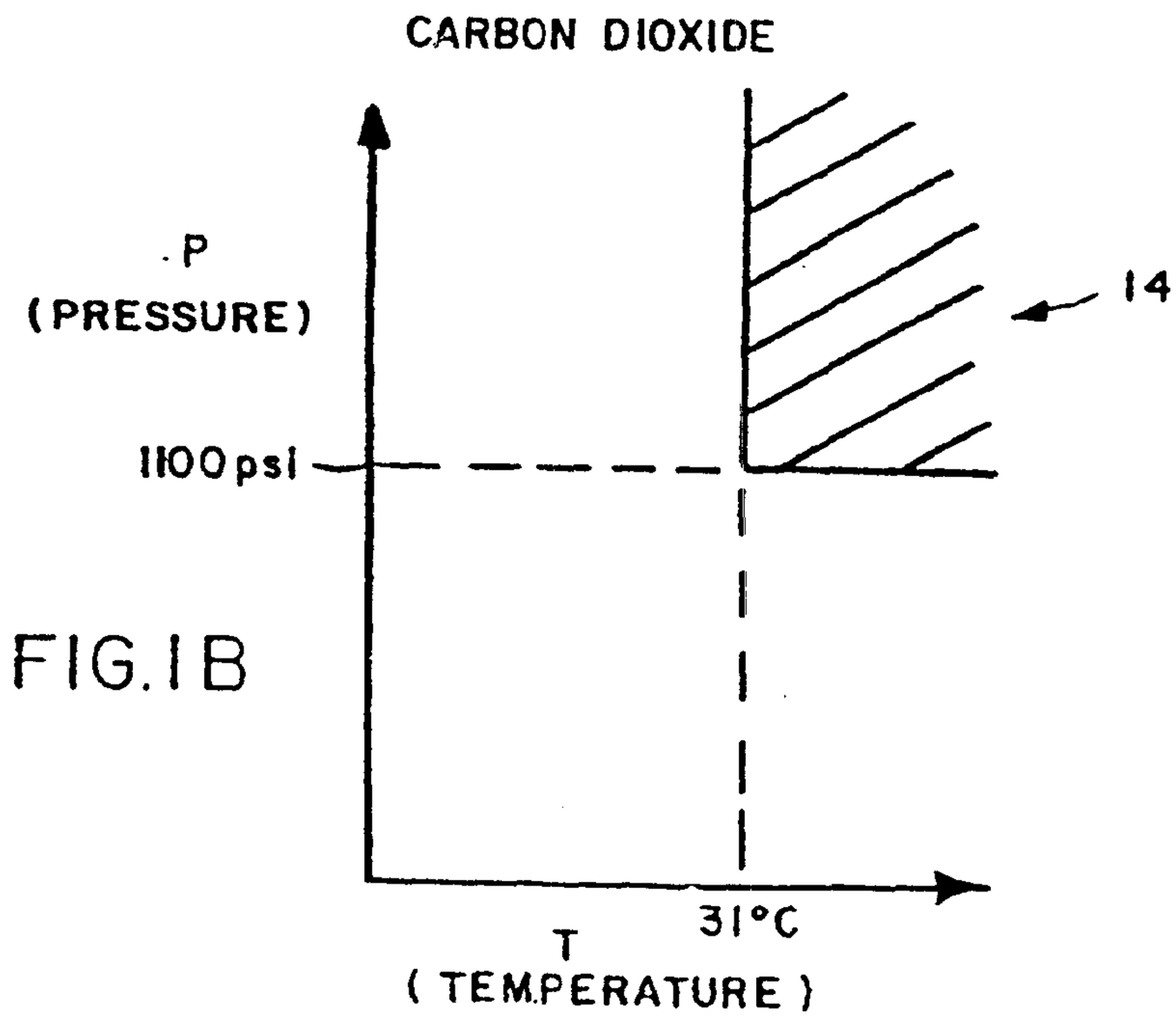

FIG. 1B

SUPERCRITICAL FLUID	C.T. (°C)	C.P. (psi)
CO_2	31.1	1071.3
ETHANE	32.3	708.3
ETHYLENE	9.3	742.1
N_2	−147.0	492.3
Fr − 12	115.7	581.9
O_2	−118.6	736.2
AMMONIA	132.5	1635.7
WATER	374.2	3208.1

FIG. 2

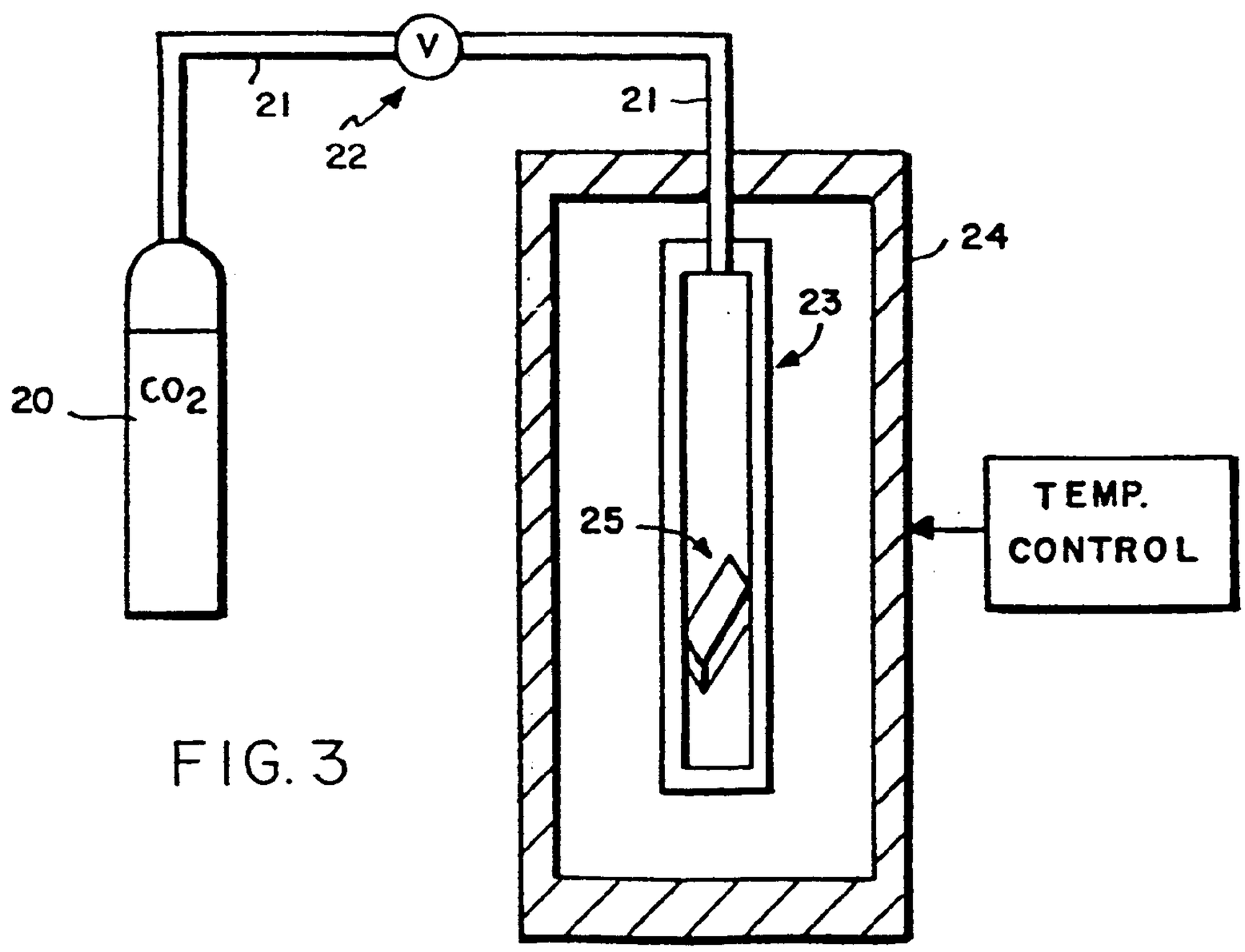

FIG. 3

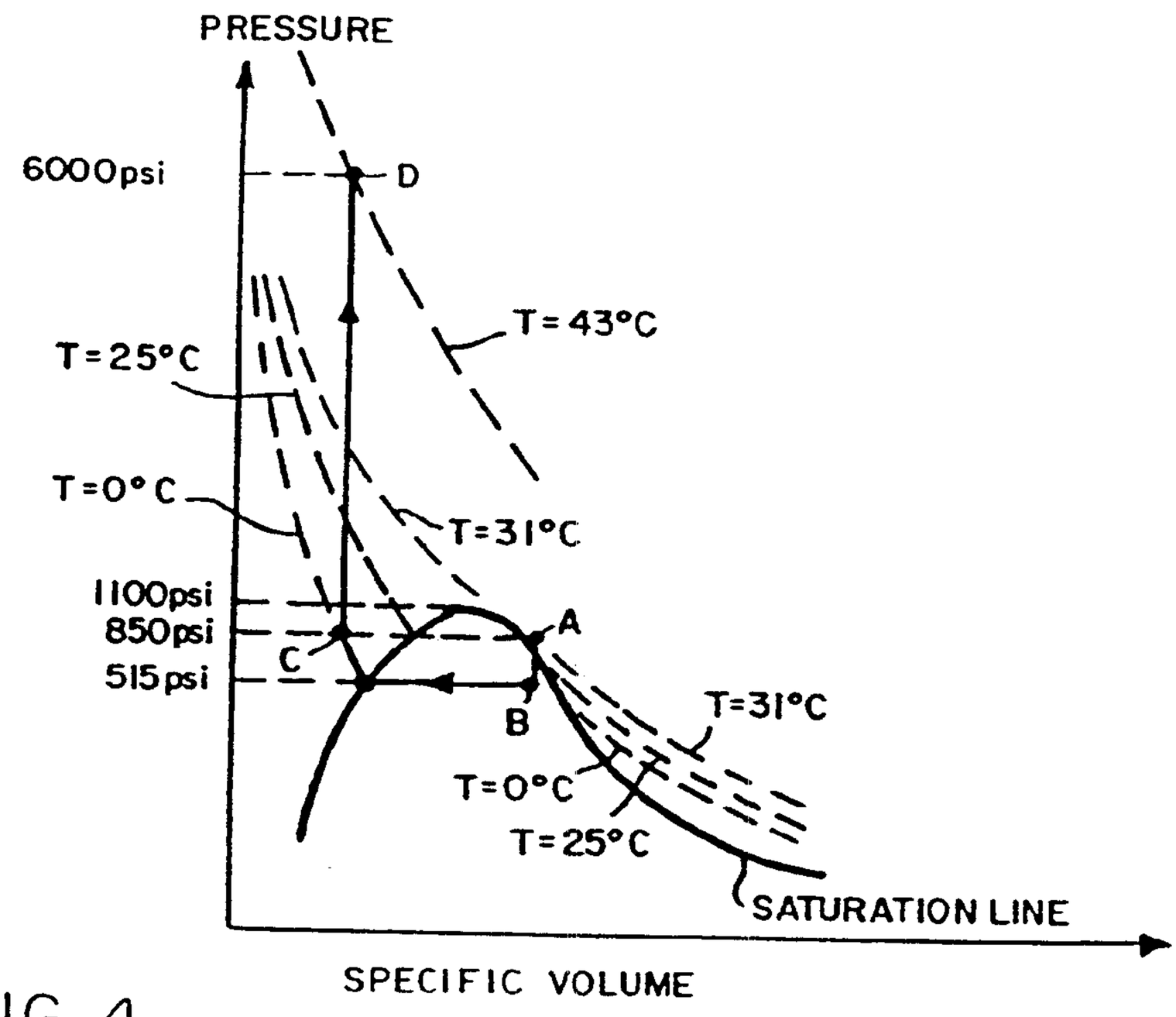
PRESSURE
6000psi
D
T=43°C
T=25°C
T=0°C
T=31°C
1100psi
850psi
515psi
A
C
B
T=31°C
T=0°C
T=25°C
SATURATION LINE
SPECIFIC VOLUME

FIG. 4

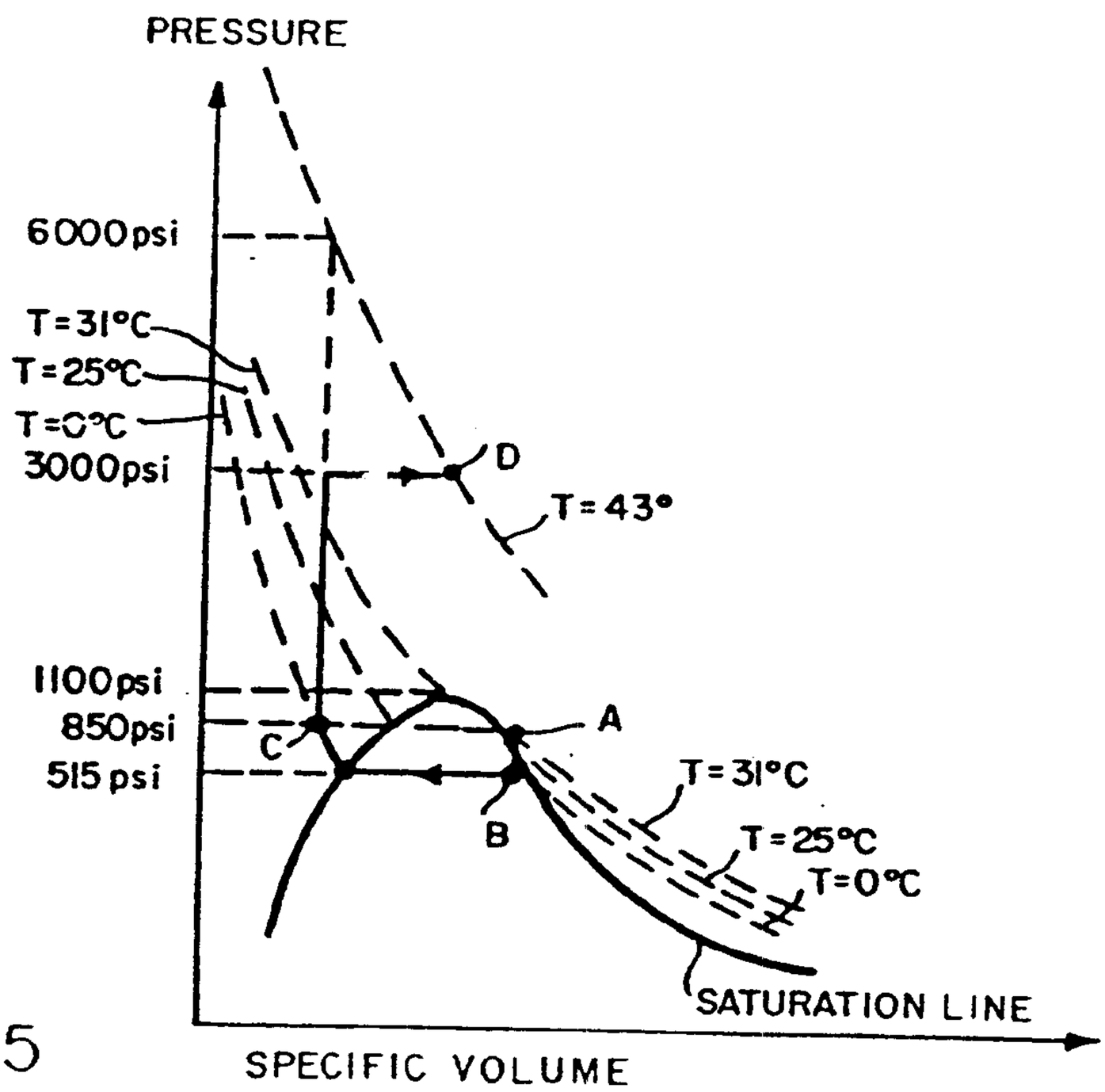
PRESSURE
6000psi
T=31°C
T=25°C
T=0°C
3000psi
D
T=43°
1100psi
850psi
515psi
A
C
B
T=31°C
T=25°C
T=0°C
SATURATION LINE
SPECIFIC VOLUME

FIG. 5

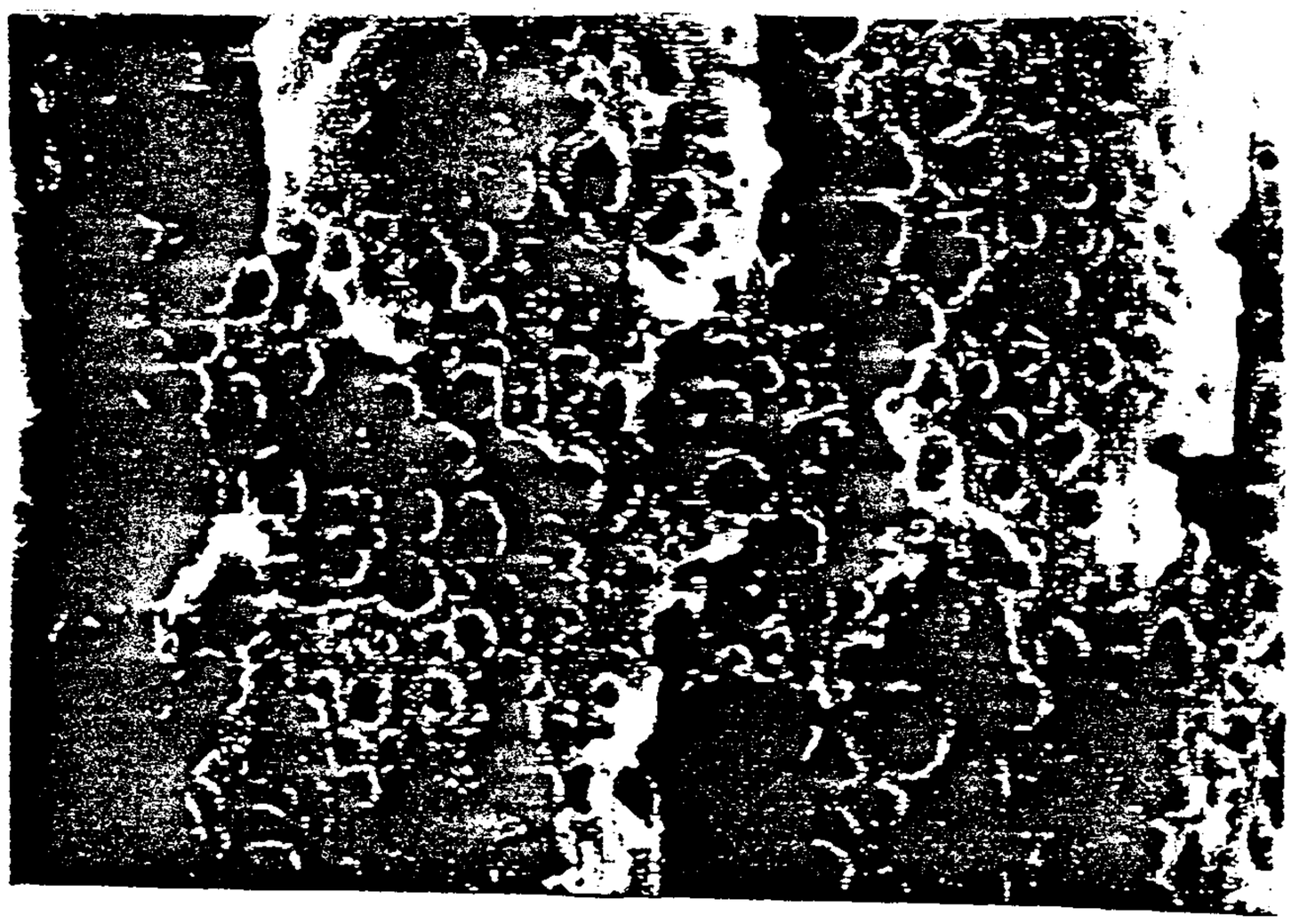

(x 2000)

FIG. 6

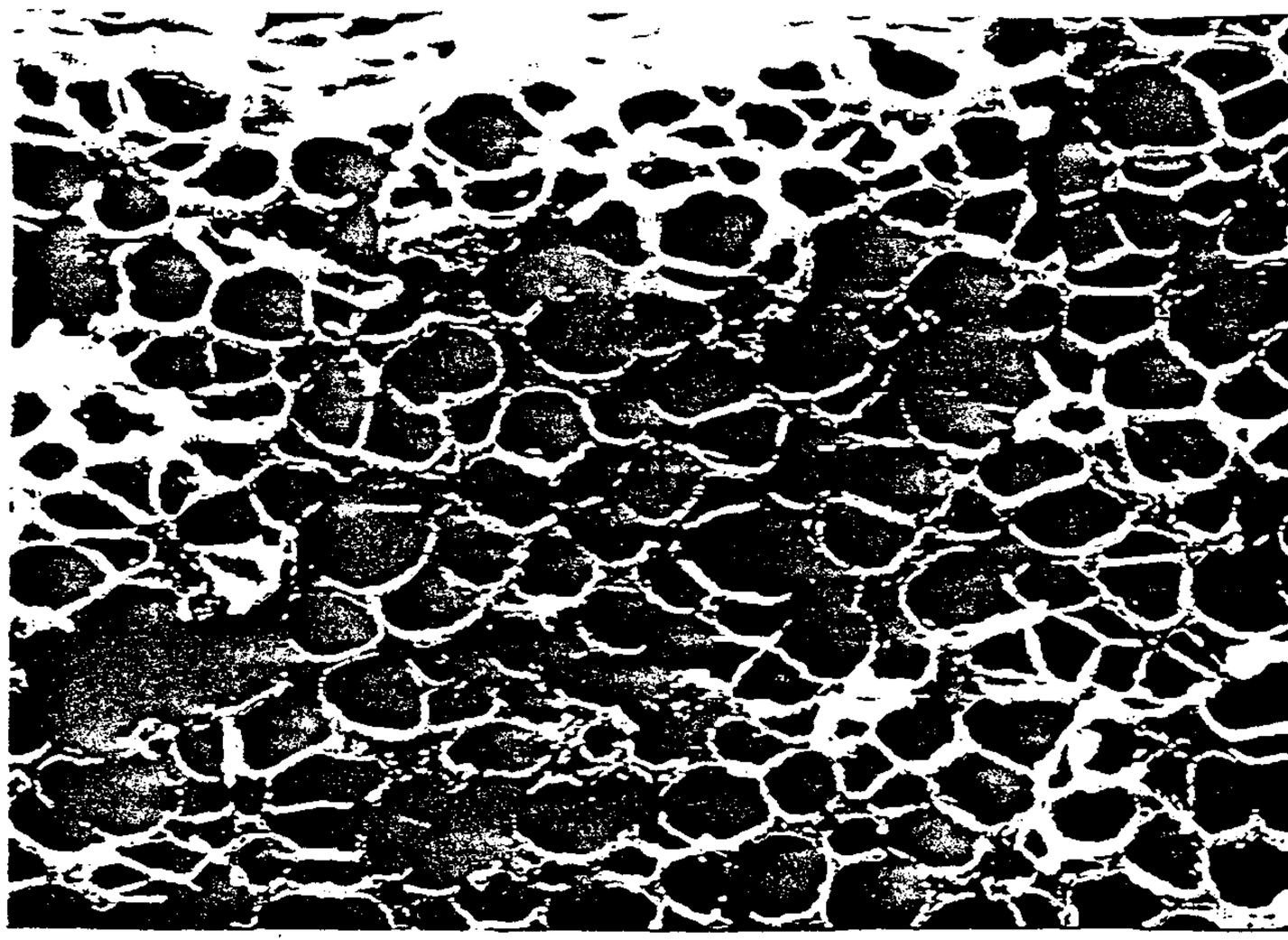

(x 1000)

FIG. 7

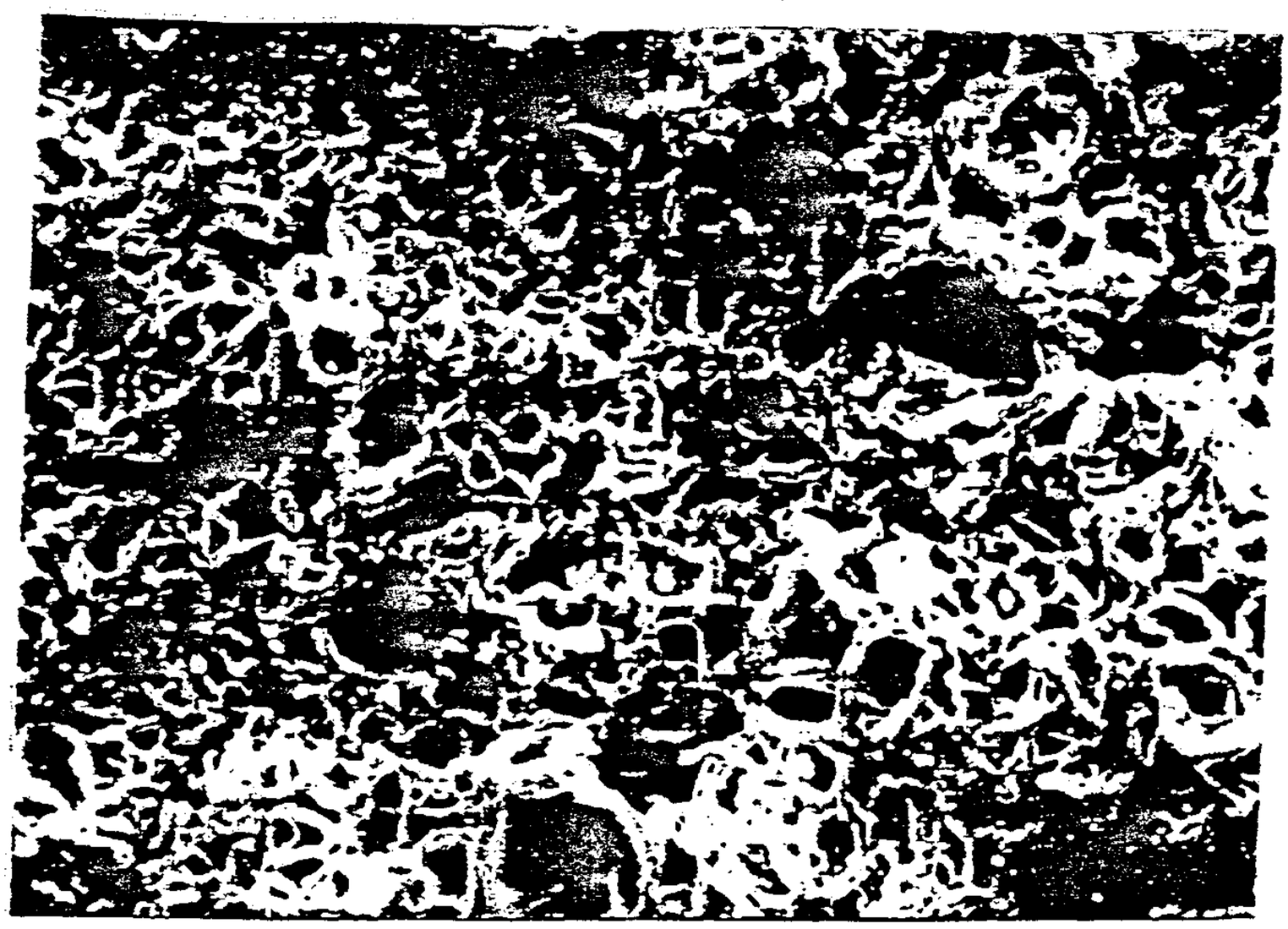

(x 5000)

FIG. 8

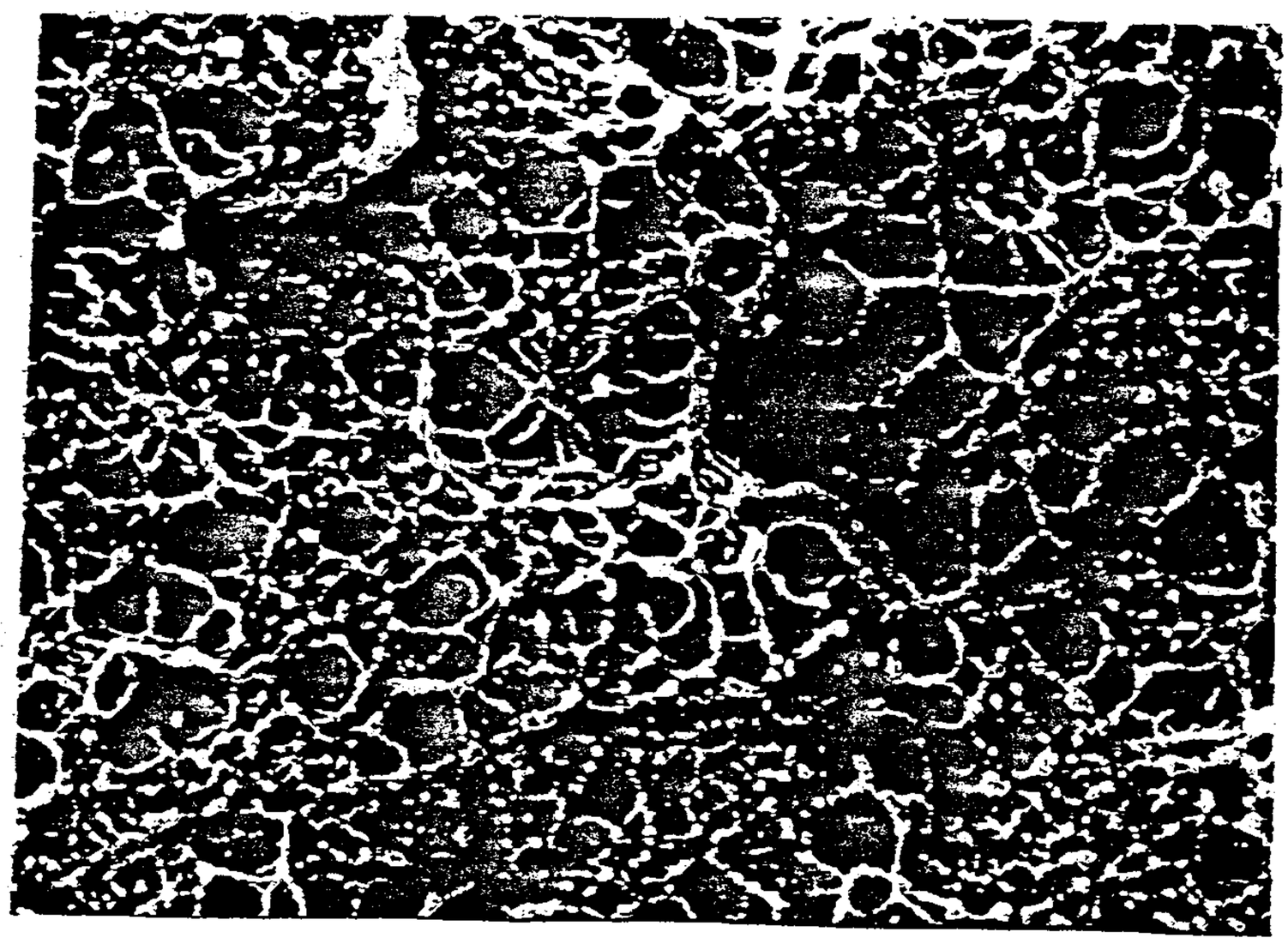

(x 5000)

FIG. 9

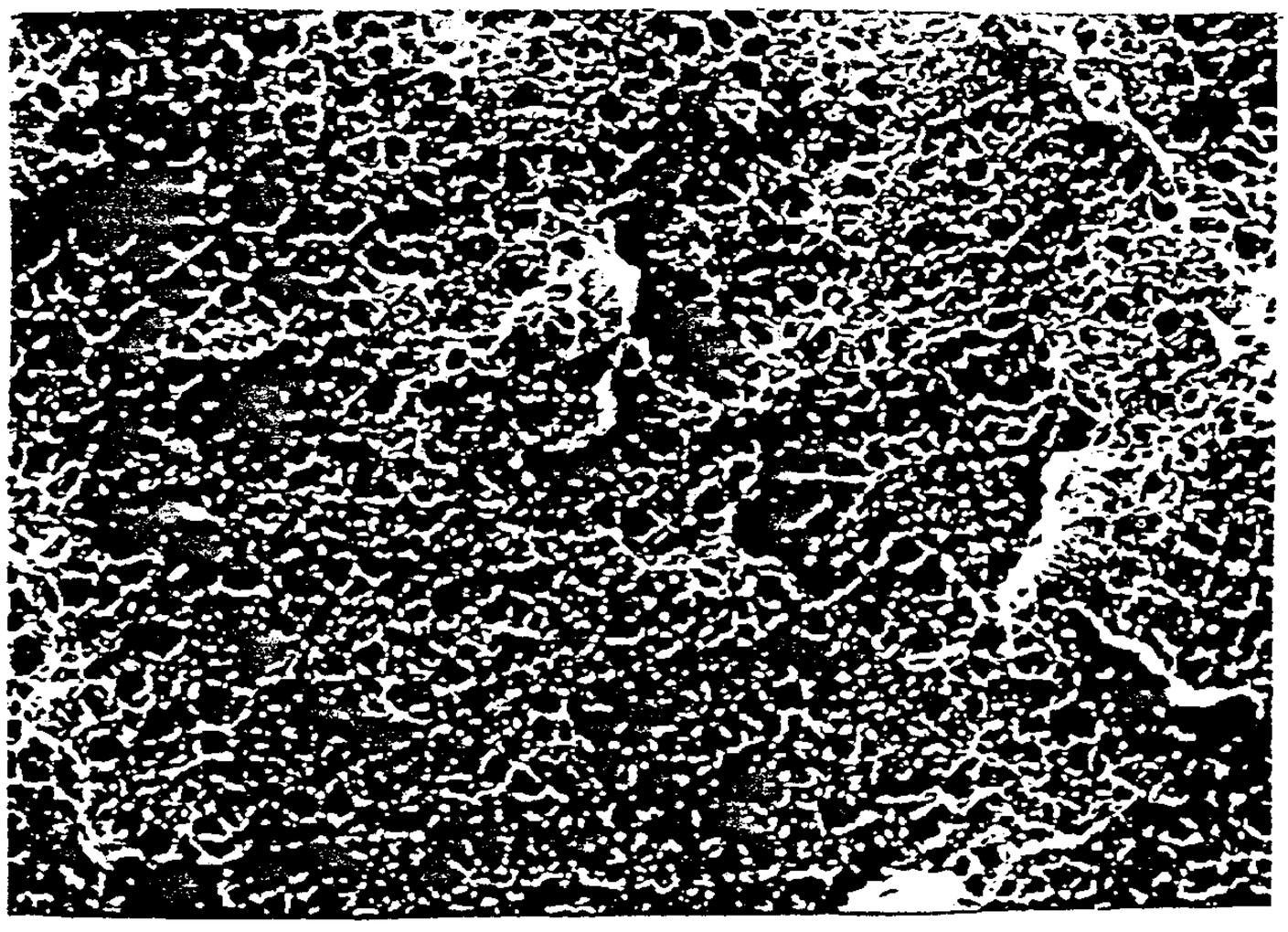

(x 2000)

FIG. 10

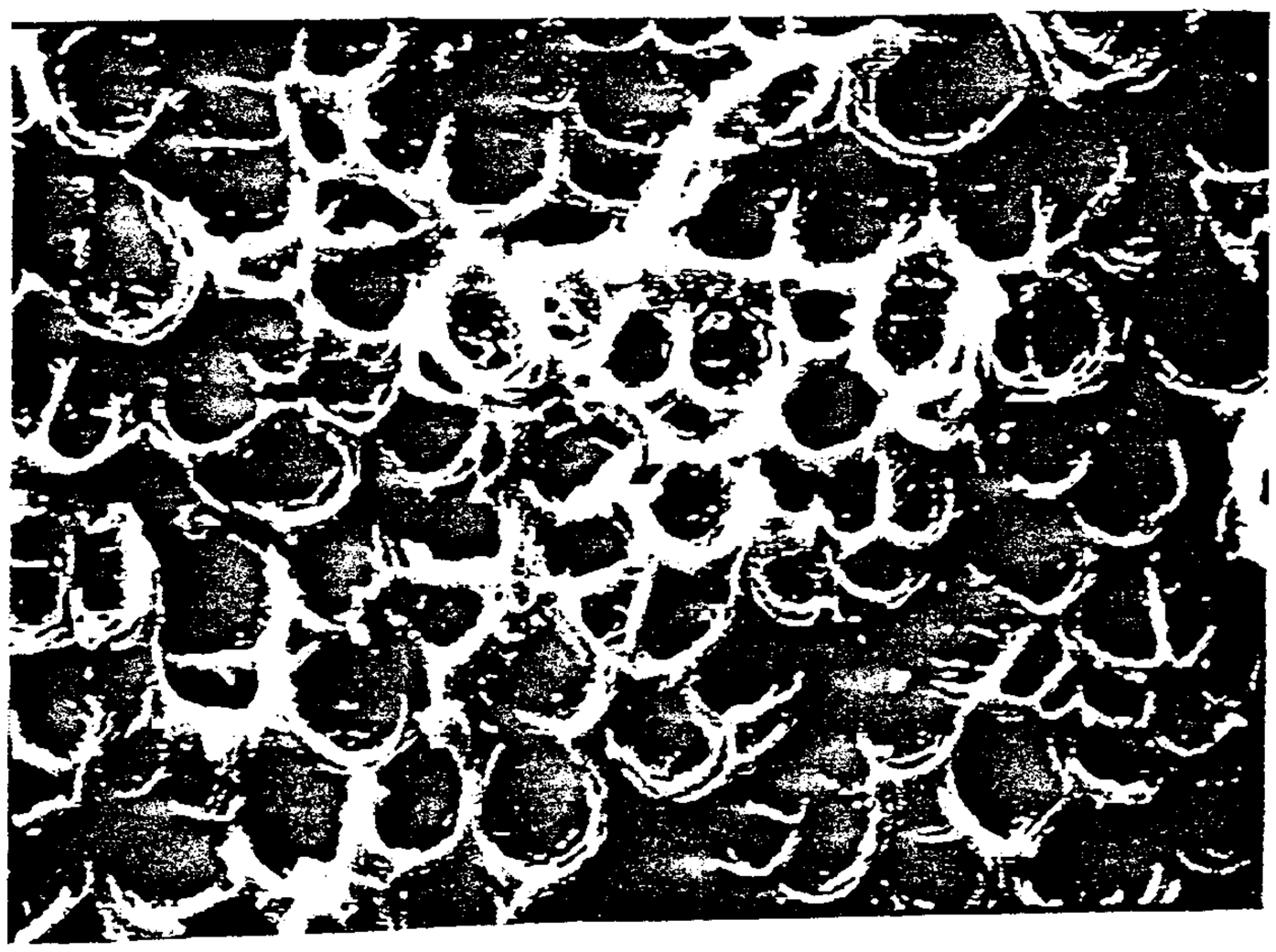

(x 2000)

FIG. 11

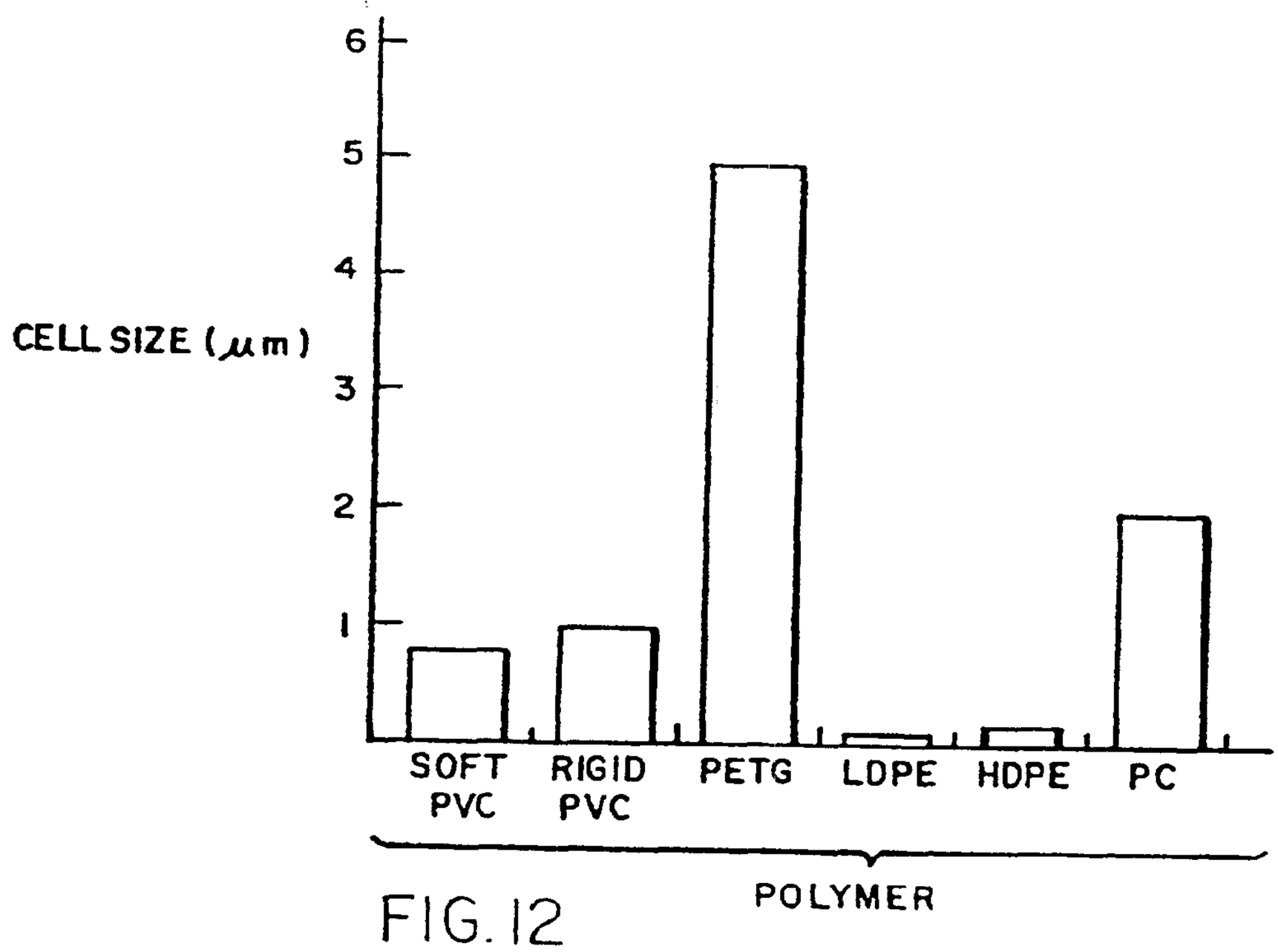
CELL SIZE (μm)
6
5
4
3
2
1
SOFT PVC
RIGID PVC
PETG
LDPE
HDPE
PC
POLYMER

FIG. 12

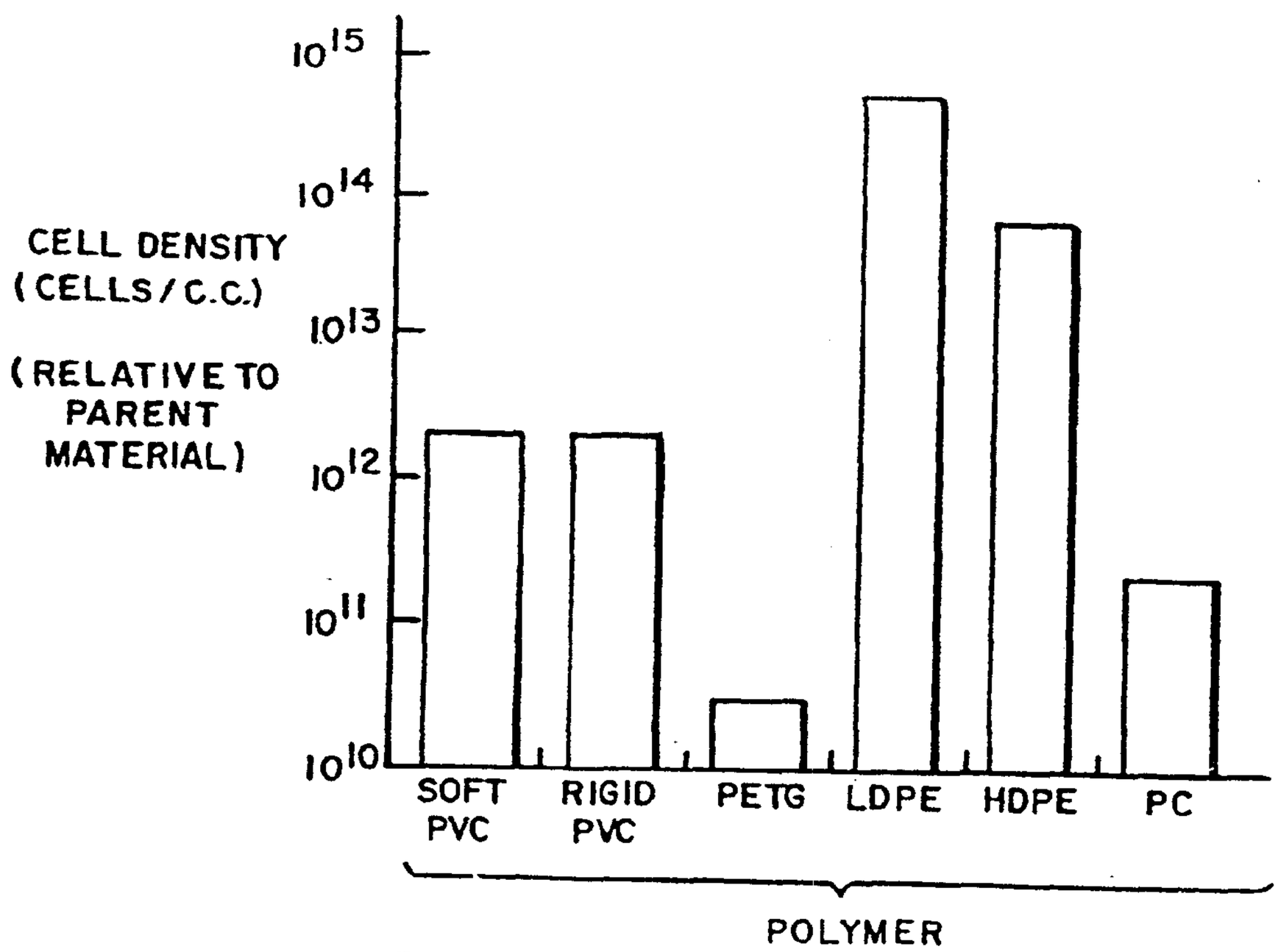
CELL DENSITY (CELLS/C.C.)
(RELATIVE TO PARENT MATERIAL)
10^{15}
10^{14}
10^{13}
10^{12}
10^{11}
10^{10}
SOFT PVC
RIGID PVC
PETG
LDPE
HDPE
PC
POLYMER

FIG. 13

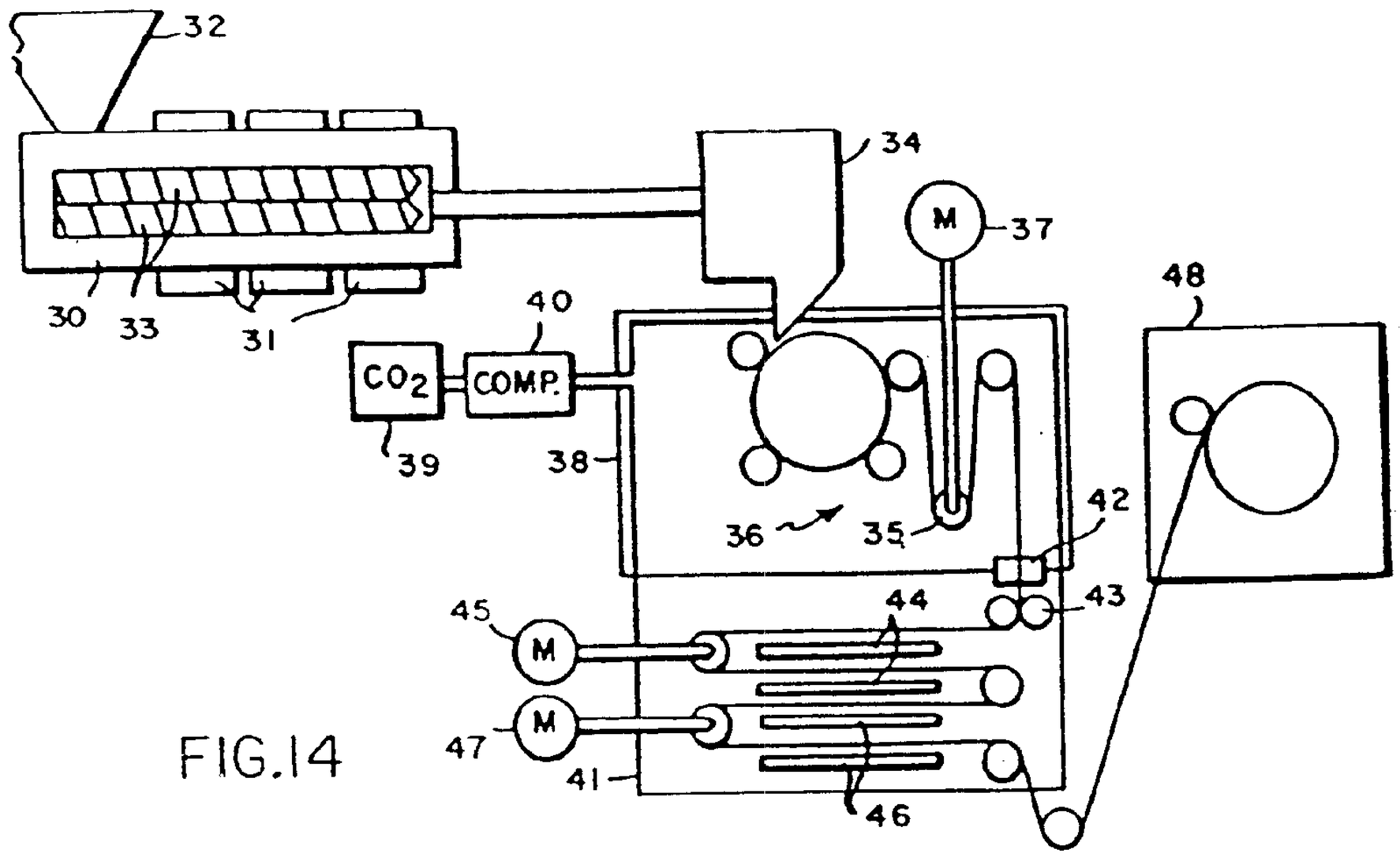
32
34
M
37
48
40
30
33
31
CO2
COMP.
39
38
36
35
42
43
44
45
M
47
M
41
46

FIG.14

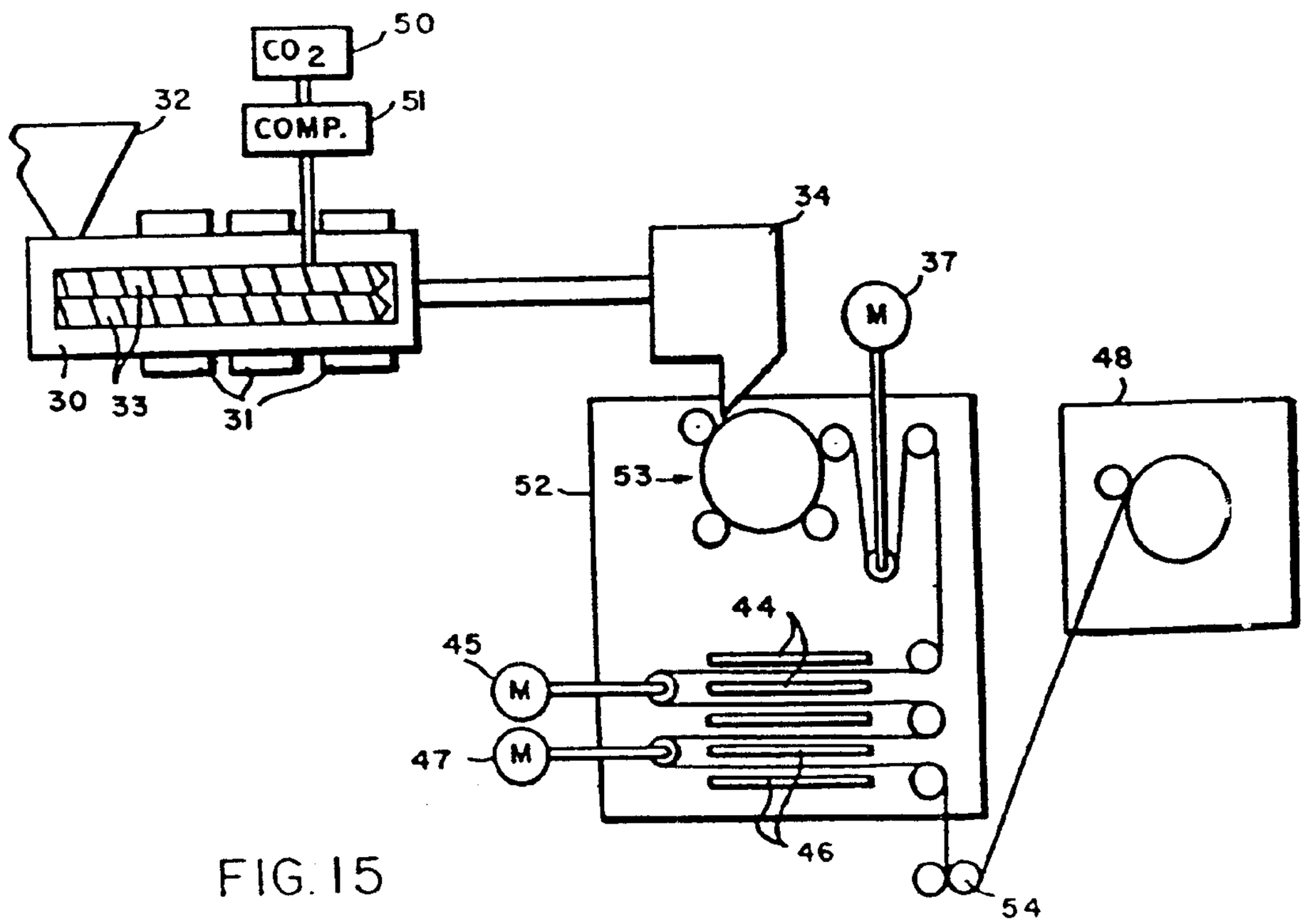
CO2
50
32
COMP.
51
34
37
M
48
30
33
31
52
53
44
45
M
47
M
46
54

FIG.15

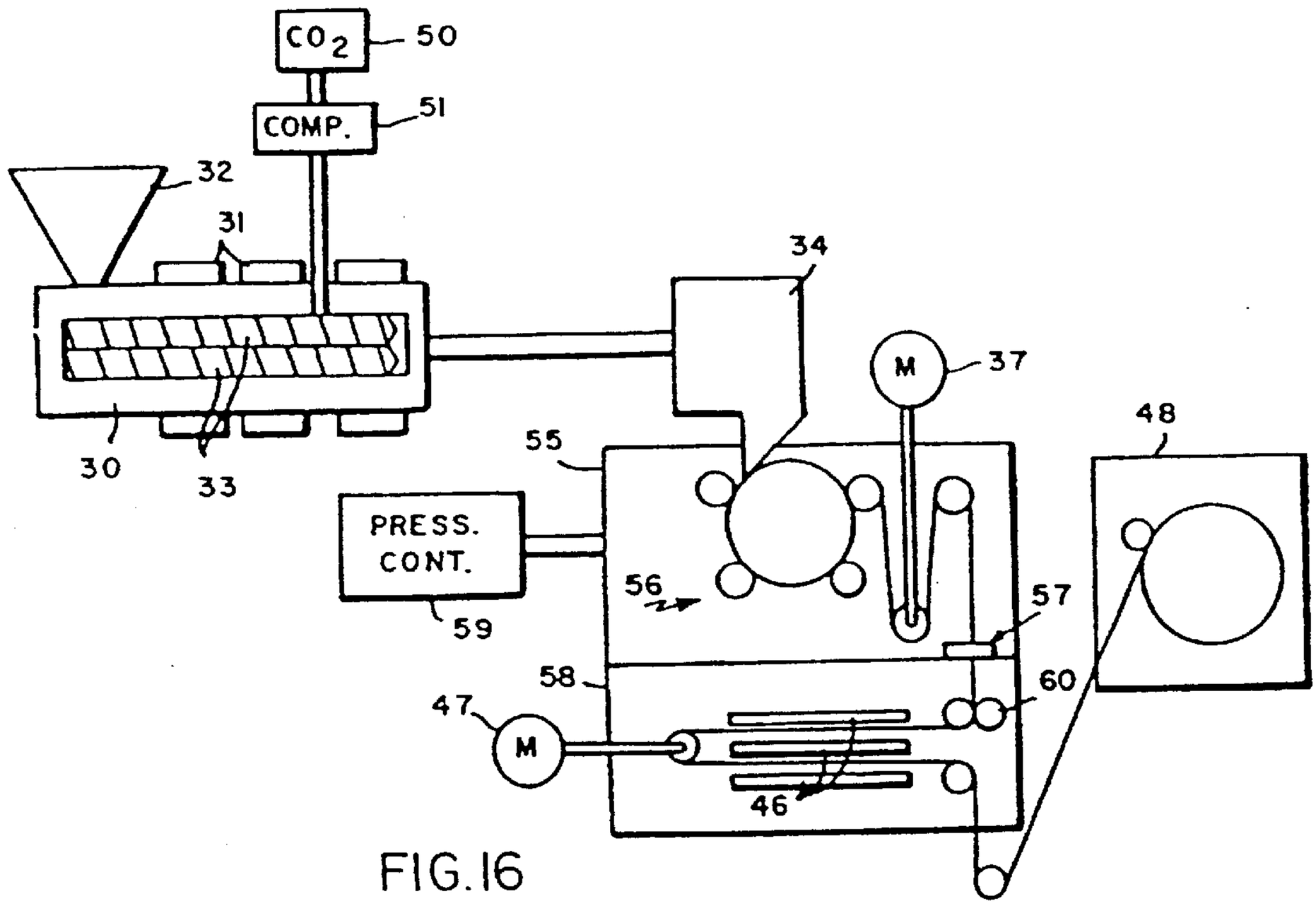
CO2
50
COMP.
51
32
31
34
M
37
48
55
30
33
PRESS.
CONT.
56
57
59
58
60
47
M
46

FIG. 16

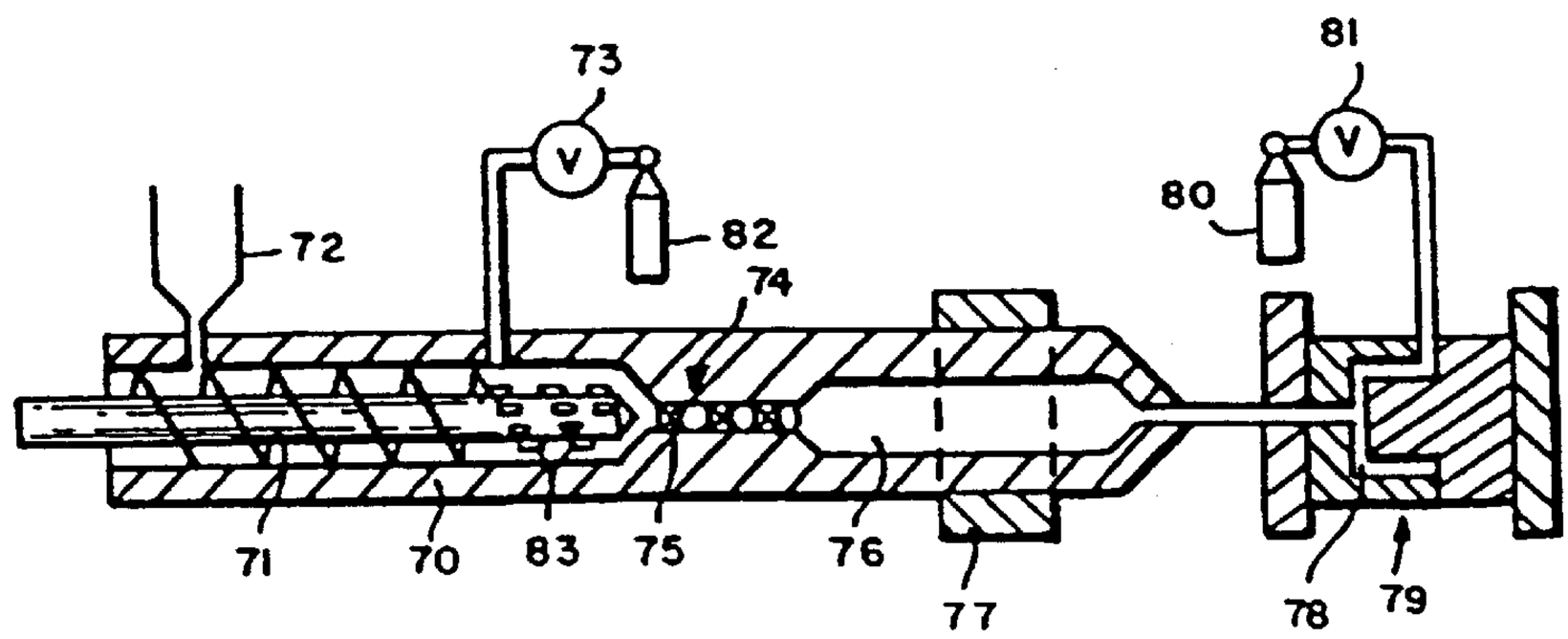
73
V
81
V
80
72
82
74
71
70
83
75
76
77
78
79

FIG. 18

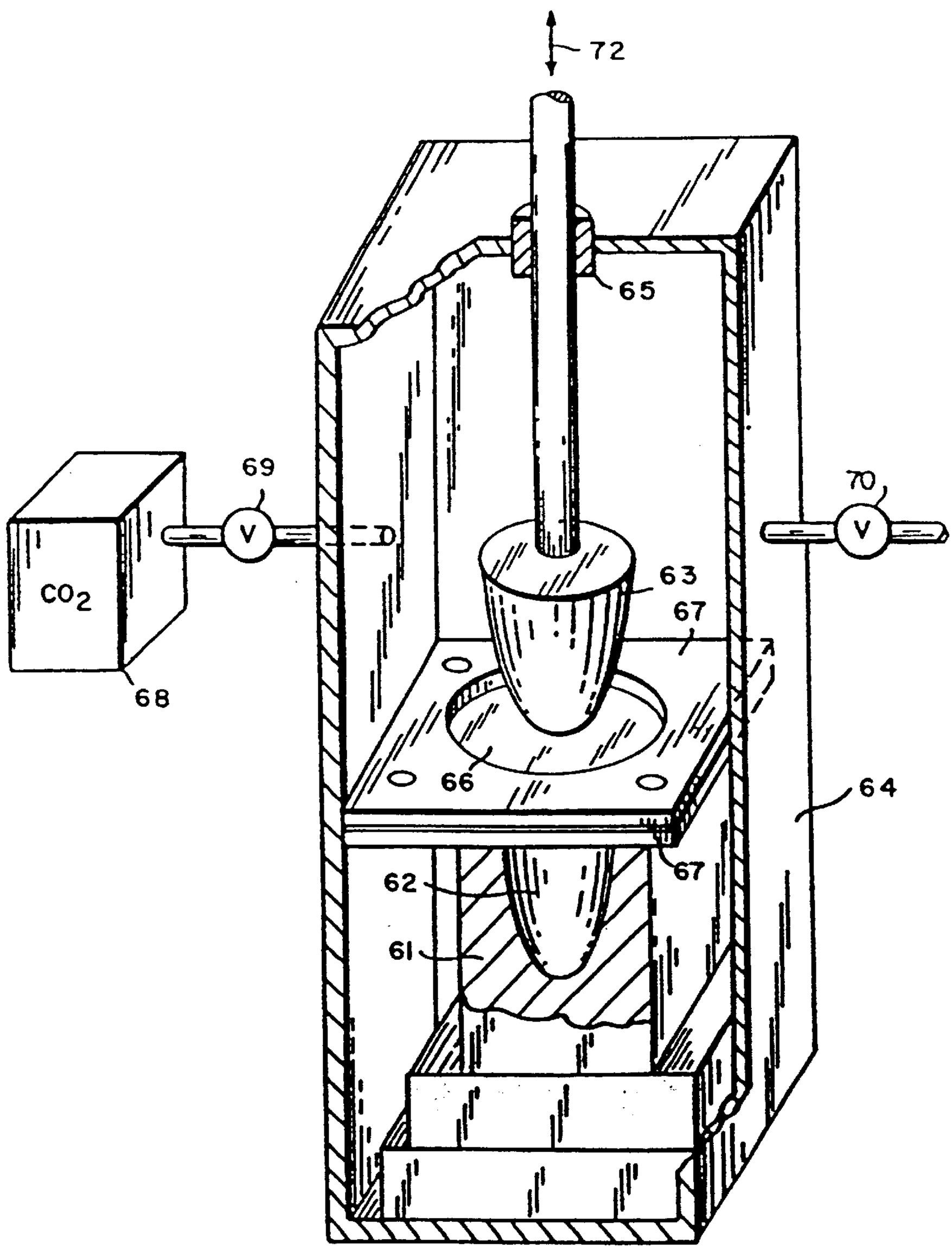

FIG. 17

SUPERMICROCELLULAR FOAMED MATERIALS

Matter enclosed in heavy brackets [ ] appears in the original patent but forms no part of this reissue specification; matter printed in italics indicates the additions made by reissue.

This is a divisional of copending application Ser. No. 07/682,116 filed on Apr. 5, 1991, now U.S. Pat. No. 5,158,986.

INTRODUCTION

This invention relates generally to foamed materials, preferably foamed plastic materials, and to techniques for making and using such materials, and, more particularly, to the use of supercritical fluids for producing supermicrocellular foamed materials which can achieve a relatively wide range of material densities and a large number of extremely small voids or cells per unit volume therein.

BACKGROUND OF THE INVENTION

Techniques for making conventional foamed materials, such as foamed polymer plastic materials, have been well known for many years. Standard techniques for such purpose normally use chemical or physical blowing agents. The use of chemical agents is described, for example, by Lacallade in the test, "Plastics Engineering," Vol. 32, June 1976 which discusses various chemical blowing agents, which agents are generally low molecular weight organic compound which decompose at a critical temperature and release a gas (or gases) such as nitrogen, carbon dioxide, or carbon monoxide. Techniques using physical agents include the introduction of a gas as a component of a polymer charge or the introduction of gases under pressure into molten polymer. Injection of a gas into a flowing stream of molten plastic is described, for example, in U.S. Pat. No. 3,796,779 issued to Greenberg on Mar. 12, 1976. Such earlier used and standard foaming processes produce voids or cells within the plastic materials which are relatively large, e.g., on the order of 100 microns, or greater, as well as relatively wide ranges of void fraction percentages e.g., from 20%–90% of the parent material. The number of voids per unit volume is relatively low and often there is a generally non-uniform distribution of such cells throughout the foamed material. Such materials tend to have relatively low mechanical strengths and toughness and there is an ability to control the dielectric constant thereof.

In order to improve the mechanical properties of such standard cellular foamed materials, a microcellular process was developed for manufacturing foamed plastics having greater cell densities and smaller cell sizes. Such a process is described, for example, in U.S. Pat. No. 4,473,665 issued on Sep. 25, 1985 to J. E. Martini-Vredensky et al. The improved technique provides for presaturating the plastic material to be processed with a uniform concentration of a gas under pressure and the provision of a sudden induction of thermodynamic instability in order to nucleate a large number of cells. For example, the material is presaturated with the gas and maintained under pressure at its glass transition temperature. The material is suddenly exposed to a low pressure to nucleate cells and promote cell growth to a desired size, depending on the desired final density, thereby producing a foamed material having microcellular voids, or cells, therein. The material is then quickly further cooled, or quenched, to maintain the microcellular structure.

Such a technique tends to increase the cell density, i.e., the number of cells per unit volume of the parent material, and

to produce much smaller cell sizes than those in standard cellular structures. The microcellular process described tends to provide cell sizes that are generally smaller than the critical sizes of flaws that preexist in polymers so that the densities and the mechanical properties of the materials involved can be controlled without sacrificing the mechanical properties of some polymers, such as the mechanical strength and toughness of the polymer. The resulting microcellular foamed materials that are produced, using various thermoplastics and thermosetting plastics, tend to have average cell sizes in the range of 3 to 10 microns, with void fractions of up to 50% of the total volume and maximum cell densities of about one billion (10^9) voids per cubic centimeter of the parent material.

Further work in producing microcellular foamed plastic material is described in U.S. Pat. No. 4,761,256 issued on Aug. 2, 1988 to Hardenbrook et al. As set forth therein, a web of plastic material is impregnated with an intert gas and the gas is diffused out of the web in a controlled manner. The web is reheated at a foaming station to induce foaming, the temperature and duration of the foaming process being controlled prior to the generation of the web to produce the desired characteristics. The process is designed to provide for production of foamed plastic web materials in a continuous manner. The cell sizes in the foamed material appear to lie within a range from 2 to 9 microns in diameter.

It is desirable to obtain improved foamed materials which will provide even smaller cell sizes, e.g., 1.0 micron or less, and much higher cell densities as high as several thousand trillions of voids per cubic centimeter, i.e., on the order of 10^{15}, or so, voids per cubic centimeter of the parent material, for example. Such materials should also have a capability of providing a wide range of void fraction percentages from very high void fractions (low material densities) up to 90%, or more, to very low void fractions (high material densities) down to 20%, or less.

Further, it is desirable to be able to produce microcellular plastics at or near ambient temperature, so as to eliminate the need to heat the plastic during the process thereby simplifying the manufacturing process. Moreover, it is further desirable to increase the speed at which a fluid is dissolved in a polymer so that the overall time of the foaming process can be significantly reduced so as to increase the rate of production of the foamed material.

No processes used or proposed for use to date have been able to provide foamed materials having such extremely small cell sizes, such extremely high cell densities and such a wide range of material densities that provide improved material characteristics. Nor have techniques been proposed to obtain such materials at ambient temperature and at increased production rates.

BRIEF SUMMARY OF THE INVENTION

In accordance with the invention, supermicrocellular foamed materials are formed by using supercritical fluids, i.e., gases in their supercritical state, which supercritical fluids are supplied to the materials to be foamed. The supercritical fluid is used as the foaming agent in a parent material, preferably, for example, in a polyester plastic material. A relatively high density supercritical fluid made at a relatively low temperature and a relatively high pressure is used to saturate the polymer without the need to raise the saturation temperature of the process to the melting point of the polymer.

While the mechanism for achieving saturation is not fully understood in detail, it is believed that the supercritical fluid

(as a solute) is initially dissolved in the polymer material (as a solvent) until the concentration percentage of supercritical fluid in the polymer reaches a reasonable level, e.g., perhaps about 10% to 40%. At some percentage level then, it is believed that supercritical fluid then tends to act as a solvent and the polymer tends to act as a solute. However, whether the supercritical fluid and polymer act as solvents or solutes during the process, at some time following the introduction of supercritical fluid into the polymer, an effectively saturated solution of the fluid and the polymer is produced. Although the aforesaid description is believed to be a reasonable theoretical explanation of what occurs during the process involved, the invention is not be construed as requiring that such specific process necessarily occurs in the manner so described.

When the fluid/polymer solution contains a sufficient amount of supercritical fluid therein at a suitably selected temperature and pressure, the temperature and/or pressure of the fluid/polymer system is rapidly changed to induce a thermodynamic instability and a foamed polymer is produced. The resulting foamed material can achieve a cell density of several hundred trillions of voids per cubic centimeter and average void or cell sizes of less than 1.0 micron, in some cases less than 0.1 micron. Moreover, in accordance with the invention, the foaming of such materials can in some cases be achieved at ambient (room) temperature conditions.

BRIEF DESCRIPTION OF THE DRAWINGS

The invention can be described in more detail with the help of the following drawings wherein

FIGS. **1** and **1A** depict graphs of the pressure vs. specific volume relationship showing the region in which a supercritical state is achieved for carbon dioxide;

FIG. **1B** depicts a graph of the pressure vs. temperature relationship showing the region in which a supercritical state is achieved for carbon dioxide;

FIG. **2** depicts a chart of critical temperatures and critical pressures required for placing various materials in their supercritical fluid states;

FIG. **3** depicts a diagrammatic view of an exemplary system for forming supermicrocellular foamed materials in accordance with the invention;

FIGS. **4** and **5** depict graphs of pressure vs. volume relationships helpful in understanding an exemplary method of the invention for an ideal and for an actual operation of the system of FIG. **3** when using carbon dioxide;

FIGS. **6**, **7**, **8**, **9**, **10**, and **11** depict microphotographs showing typical cross-section views of the cells produced in various supermicrocellular foamed materials in accordance with the invention (note that micron scales indicated in the figures);

FIG. **12** depicts bar graphs of the average cell sizes produced for various supermicrocellular foamed polymer plastic materials formed in accordance with the invention under substantially the same exemplary conditions;

FIG. **13** depicts bar graphs of the average cell densities produced for the various supermicrocellular foamed polymer plastic materials shown in FIG. **12** formed under substantially the same exemplary conditions;

FIG. **14** depicts a continuous system using extrusion techniques for providing sheets of foamed materials in accordance with the invention;

FIG. **15** depicts an alternative continuous system using extrusion techniques in accordance with the invention;

FIG. **16** depicts a further alternative continuous system using extrusion techniques in accordance with the invention;

FIG. **17** depicts a system in which the foaming of a material and the forming of an article therefrom can take place in accordance with the invention; and

FIG. **18** depicts an injection molding system in accordance with the invention in which the time required for saturation of a material by a supercritical fluid is greatly reduced from that normally required for microcellular foaming.

A supercritical fluid can be defined as a material which is maintained at a temperature which exceeds a critical temperature and at a pressure which exceeds a critical pressure so as to place the material in a supercritical fluid state. In such state, the supercritical fluid has properties which cause it to act, in effect, as both a gas and a liquid. Thus, in the supercritical state, such a fluid has the solvent characteristics of a liquid, but the surface tension thereof is substantially less than that of a liquid so that the fluid can diffuse much more readily into a solute material, as in the nature of a gas.

For example, it is known that carbon dioxide (CO_2) can be placed in a supercritical state when its temperature exceeds 31° C. and it pressure exceeds 1100 psi. FIGS. **1** and **1A**, for example, depict curves **10** and **12** of pressure vs. specific volume (FIG. **1**) and temperature vs. specific entropy (FIG. **1A**) for carbon dioxide. When the pressure is above 1100 psi and the temperature is above 31° C. (curve **10A**) exemplified by the shaded region **11** of FIG. **1**, and when the temperature is above about 31° C. and the pressure is above 1100 psi (curve **12A**) exemplified by the shaded region **13** of FIG. **1A**, carbon dioxide is provided in its supercritical state. As depicted another way, FIG. **1B** shows the pressure vs. temperature relationship for CO_2 in which such critical pressure (1100 psi) and critical temperature (31° C.) are depicted so as to define the supercritical state by the shaded region **14**.

The chart of FIG. **2** depicts the critical temperatures and pressures for various known exemplary materials, above which values such materials are placed in their supercritical fluid states.

FIG. **3** shows a diagrammatic view of an exemplary system for use in forming supercritical foamed materials in accordance with the invention. As can be seen therein, a source of carbon dioxide in a non-critical state is provided from a pressurized CO_2 cylinder **20** in which CO_2 is maintained at a pressure and temperature below the above discussed critical values. The CO_2 therein is supplied through conduit **21** via a high pressure valve **22** to a high pressure chamber **23**. The temperature of the chamber can be controlled, for example, by placing the chamber in a temperature controlled enclosure **24**. A material **25**, such as a polymer plastic material, is placed within chamber **23**. The temperature of the chamber is controlled to be set at a selected initial temperature level.

In order to understand the process of the invention for providing a supercritical fluid, such as CO_2 in its supercritical state, to chamber **23** for use in producing a foamed material, it is helpful to consider the pressure-volume relationships shown in FIGS. **4** and **5** which depict such relationships both ideally (FIG. **4**) and in an actual experiment case (FIGS. **5**) when CO_2 is used in its supercritical fluid state with a soft polyvinyl chloride polymer plastic.

In accordance with a specific exemplary process for providing a supercritical CO_2 fluid, the temperature of chamber **23** is initially set at 25° C., via a suitable temperature control of enclosure **24** using control technique as

would be well-known to those in the art. A CO_2 gas is maintained in cylinder **20** at a pressure of 850 psi (5.8 MPa), for example, and high pressure valve **22** is opened to supply CO_2 gas at such pressure to chamber **23** via conduit **21**. Valve **22** is closed (point A of FIGS. **4** and **5**) so that initial conditions of a temperature of 25° C. and a pressure of 850 psi are established in chamber **24**.

The temperature of chamber **24** is then reduced to 0° C. at which point the pressure drops to 515 psi (point B of FIGS. **4** and **5**). The specific volume is reduced and the high pressure valve **22** is then opened (point B of FIGS. **4** and **5**), so that the pressure in chamber **23** again rises to the 850 psi level of the CO_2 cylinder (point C of FIGS. **4** and **5**). The temperature of the chamber is then again controlled so as to increase from 0° C. to a much higher temperature, selected in this exemplary case as 43° C. The pressure rises from 850 psi to a much higher value shown theoretically in the ideal case as 6000 psi (point D of FIG. **4**). In a practical case, the pressure must be controlled so as not to exceed the limits imposed by the chamber **23**. In a practical case, the high pressure value, for example, is increased to 3000 psi (point D of FIG. **5**).

At point D, the CO_2 is in a super critical state and acts as a supercritical fluid. At such point, the CO_2 is supplied to the polymer plastic material **25** to form a fluid/polymer solution containing a sufficient amount of supercritical CO_2 for a supermicrocellular foaming process. In effect the solution can be thought of as being saturated with supercritical CO_2, which saturation process occurs over a particular saturation time period, depending on the thickness of the polymer plastic. For example, if material **25** is a sheet of plasticized polyvinylchlorine (PVC) material, having a thickness of about 1/16 inch, a sufficient time period for such operation is about 5 minutes, such time being more or less dependent on the diffusion distance of the polymer (the thickness thereof) and the diffusion characteristics of the super-critical fluid, e.g., CO_2, in the particular polymer used.

Following formation of the desired fluid/polymer material, the chamber is opened and the material is removed therefrom so that the pressure and temperature thereof rapidly assumes ambient room conditions (e.g., 77° F., 0.1 Mpa). Such rapid changes in temperature/pressure conditions induced a thermodynamic instability so that forming (cellular nucleation and cell expansion) takes place within the material. The foaming time to achieve a desired supermicrocellular foam PVC material, for example, is about one or two minutes, such time being more or less dependent on the temperature of the material prior to removal. It is found that such PVC material achieves a cell density of about 2×10^{12} cells/cc. and an average cell size of about 0.8 microns. The cell density is primarily a function of the amount of supercritical fluid in the fluid/polymer solution as measured relative to the unfoamed material. A microphotograph of an exemplary cross-section of such material is shown in FIG. **6**. magnified 2000 times, the cell distribution being substantially uniform throughout the material.

Similar experimental foamed materials were made using substantially the same technique. For example, a glycol modified polyethylene-terephthalate (i.e., co-polyester) polymer material (PETG) was supplied with sufficient supercritical CO_2 fluid over a time period of about 10 hours and, when removed to room temperature and pressure conditions, the fluid/polymer system was found to foam in about one or two minutes, thereby producing a supermicrocellular foamed PETG material having a substantially uniform cell distribution, a cell density of about 3×10^{10} cells/cc. and an average cell size of about 5 microns. A microphotograph thereof is shown in FIG. **7** at a magnification of 1000 times.

In some cases, particularly when using a semi-crystalline material, it has been found that the foaming temperature must be higher than ambient room temperature. For example, when a sheet of rigid PVC material having a thickness of 1/16 inch 1.59 mm) is used, an effectively saturated fluid/polymer system can occur at a pressure of about 1500 psi (10.2 MPa) and a temperature of 43° C. over a time period of about 15 hours. Following the formation thereof, the material is foamed at a much higher temperature than ambient room temperature, e.g., at 160° C. at ambient pressure. Such foaming can be produced by removing the saturated rigid PVC polymer from the chamber **24** and placing it in a liquid glycerin bath the temperature of which is at the desired 160° C. level Supermicrocellular foaming was found to take place in about 10 seconds. In such case, an average cell size of about 1.0 micron and a cell density of about 2×10^{12} cells/cc. was achieved, there being a reasonably uniform distribution of such cells throughout the material. A microphotograph of such foamed rigid PVC material is shown in FIG. **8** at a magnification of 5000 X.

As similar foaming temperature 160° C. was used for both low density and high density polyethylene (LDPE and HDPE) polymers. In the case of a low density sheet of PE having a thickness of 1/16 inch (1.59 mm), the formation of a suitable fluid/polymer system took place at a pressure of 3000 psi and a temperature of 43° C. over a 10 hour time period, while supermicrocellular foaming occurred at the 160° C. level at ambient pressure in about 20 seconds. Such operation produced very small average cell sizes of about 0.1 micron and cell densities of about 5×10^{14} cells/cc. In the case of a sheet of high density PE having a thickness of 1/16/inch (1.59 mm), formation of a desired fluid/polymer system also occurred at 3000 psi and 43° C. over a 10 hour time period, while foaming occurred at 160° C. and ambient pressure in about 20 seconds. Such operation produced very small average cell sizes of about 0.2 microns and cell densities of about 6×10^{13} cells/cc. Microphotographs of exemplary foamed LDPE polymers and foamed HDPE polymers are shown in FIGS. **9** and **10**, respectively, at magnifications of 5000 X (FIG. **9**) and of 2000 X (FIG. **10**), respectively.

In a further exemplary case, a sheet of polycarbonate polymer having a thickness of 1/16 inch was supplied with supercritical CO_2 to form a suitable fluid/polymer system at a pressure of 1500 psi (10.2 MPa) and 43° C. over a 15 hours time period, while foaming occurred at 160° C. and ambient pressure in about 10 seconds to produce average cell sizes of about 2 microns and cell densities of about 2×10^{11} cells/cc. A microphotograph of an exemplary cross-section thereof is shown in FIG. **11** at a magnification of 2000 X.

The bar diagrams depicted in FIGS. **12** and **13** show the correlation between average cell sizes and cell densities for the above discussed exemplary foamed materials. In the figures, the bars as related to each material are so designated in each case and, as can be seen, generally the smaller the cell sizes obtained the greater the cell densities that can be achieved.

While the producing of a supercritical fluid for use in the process of the invention is performed in the above particular examples at a temperature of 43° C. and at pressures of 1500 psi or 3000 psi, such temperatures can range from about 35° C. to about 45° C., or higher, and such pressures can range from about 1400 psi to about 6000 psi, or more. The supercritical fluid should have a relatively high density, e.g., for supercritical CO_2 fluid a density of about 0.016 moles per cubic centimeter to about 0.022 moles per cubic centimeter can be used.

Although the technique described above with reference to FIG. **3** is in effect a batch processing technique, foamed materials can also be made using a continuous process in which polymer plastic pellets or sheets are used. FIG. **14**, for example, depicts one such continuous technique using a co-rotating twin screw extruder of a type well-known to those in the art for supplying a sheet of polymer to a chamber **38** for foaming of the polymer using a supercritical fluid.

As seen in the diagram of FIG. **14**, an extruder barrel **30** having a plurality of barrel heaters **31** has a polymer material, e.g., in the form of polymer pellets, supplied thereto via a hopper **32**. Extruder barrel **30** contains a co-rotating meshing twin screw assembly **33** for extruding polymer plastic material to a sheet die **34**. A continuous sheet of polymer material is thereby supplied to an arrangement **36** of rollers held at a substantially constant temperature. A motor **37** is used to control the position of roller **35** so as to control in turn the residence time of the polymer sheet in chamber **38** by controlling the length of the sheet resident in the chamber. The roller system **36** is positioned within a chamber **38** to which is supplied a supercritical fluid from a source **39** thereof. For example, a source **39** of CO_2 in a gaseous form supplies CO_2 gas to a compressor **40**, the temperature of the gas and the pressure at the compressor being controlled to place the CO_2 in its supercritical state when it is supplied to chamber **38**.

As the sheet of polymer plastic travels through the roller system **36** at a selected speed, e.g., at a linear space of about 1.0 inch/second, the supercritical fluid and the polymer form a fluid/polymer system, sufficient fluid being supplied so that the sheet is effectively saturated with fluid as it leaves chamber **38**. The saturated sheet of polymer emerges from chamber **38** into a foaming chamber **41** via a suitable dynamic pressure seal **42** and thence through a pair of chilled rollers **43**. The drop in pressure occurring from the pressure in chamber **38** to the pressure in chamber **41**, e.g., ambient pressure, as the fluid/polymer sheet exits through the dynamic seal **42** to the chilled rollers **43** causes a nucleation of cells within the fluid/polymer material which cellular nucleation is maintained at the chilled rollers **43**. The fluid/polymer sheet material is then heated by passing the sheet adjacent foaming heaters **44**, the time of residence therethrough being controlled by changing the length of the sheet resident in chamber **41** adjacent heaters **44** using a motor **45**. The increase in temperature of the fluid/polymer material causes the nucleated cells to expand so that the polymer material is appropriately foamed as it leaves the region of the foaming heaters **44**.

In a further optional step, the foamed material can then be annealed, e.g., for crystallization of the foamed polymer, if desired, by supplying the foamed sheet material to annealing heaters **46**, the time for such annealing process being controlled by changing the length of the sheet resident adjacent heaters **46** using a motor **47**. The foamed, and annealed, material can then be supplied from foaming chamber **41** to a take-up roller device **48** for storage.

An alternative continuous foaming process is depicted in FIG. **15** using the system of FIG. **14** in a somewhat different manner. As can be seen therein, a supercritical fluid is supplied to a polymer plastic material while the latter material is being extruded from extruder barrel **30**, the supercritical fluid, e.g., CO_2, being obtained from a CO_2 gas supply **50** and a compressor **51**, as before. The supercritical fluid is supplied to the interior of heated extruder barrel **30** at an appropriately selected position so as to introduce the fluid into the molten polymer material. Sufficient supercritical CO_2 is supplied so as to form a molten fluid/polymer material in which the polymer is effectively saturated with supercritical fluid. The molten fluid/polymer material exists from extruder barrel **30** and is supplied to a sheet die **34**. Sheet die **34** forms a sheet of such fluid/polymer material, which saturated sheet is then supplied to an arrangement **53** of chilled rollers in a foaming chamber **52**. The pressure in the chamber **52** is maintained at a level lower than that at the extruder barrel exist and as the pressure drops upon entering of the fluid/polymer material into chamber **52**, cell nucleation occurs within the material. The chilled rollers maintain the cell nucleation condition and the fluid/polymer material is then supplied to foaming heaters **44**, where cell expansion and, thereby, completion of the foaming process is achieved. As in the system of FIG. **14**, the foamed polymer material can be annealed, e.g., for crystallization of the foamed polymer if desired, by annealing heaters **46** (optional) and the annealed foamed polymer material can exit the foaming chamber for supply to a take-up device **48** via chilled rollers **54**. Motors **37**, **45** and **47** are used as above, to control the residence times of the sheet at the corresponding regions of chamber **52**.

A further alternative embodiment of the continuous process shown in FIGS. **14** and **15** is depicted in FIG. **16**, wherein a supercritical fluid, e.g., CO_2 in its supercritical state, is supplied to an extruder barrel **30**, as in FIG. **15**, for providing saturated extruded fluid/polymer material therefrom. The extruded material is then formed into a sheet of fluid/polymer material and supplied to a pressurized chamber **55**, the pressure in which is suitably controlled by a pressure controller **59**. The sheet material is supplied to an arrangement **56** of constant temperature rollers and thence exits chamber **55** via a dynamic pressure seal **57**.

If the pressure in chamber **55** is maintained at substantially the same pressure as the saturation pressure of the supercritical fluid supplied by compressor **51**, both cell nucleation and cell expansion occur as the fluid/polymer sheet exits via dynamic seal **57** due to the pressure drop from the pressure in chamber **55** to the lower pressure in an annealing chamber **58**. The foamed polymer material is then passed through chilled rollers **60** to maintain its foamed condition and supplied to annealing heaters **46** and thence to take-up device **48**, as before. Residence times in chambers **55** and **58** are controlled by motors **37** and **47**, respectively, as before.

If the pressure in chamber **55** is controlled to be at a level below that of the saturation pressure of the supercritical fluid supplied by compressor **51**, cell nucleation occurs as the sheet material exits sheet die **34** into the lower pressure chamber **55**. The chilled rollers **56** maintain the nucleated cells. Cell expansion then occurs as the polymer material exists at dynamic seal **57** to an even lower pressure annealing chamber **58**, e.g., at ambient pressure, so that the completely foamed polymer material is obtained at that point. The chilled rollers **60** maintain the cell expansion. In such an operation as depicted in FIG. **16**, foaming (i.e., cell nucleation and cell expansion) takes place substantially solely due to the pressure differentials which occur in the system. Such operation can be contrasted with that of FIG. **14**, for example, wherein cell nucleation occurs due to the pressure differential at dynamic seal **42** and cell expansion occurs due to the temperature differential at foaming heaters **44**. Such operation can also be contrasted with that of FIG. **15**, for example, wherein cell nucleation occurs due to the pressure differential at the exit of sheet die **34** and cell expansion occurs due to the temperature differential at forming heaters **44**.

The embodiments discussed with reference to FIGS. **1–16** disclose techniques in which foaming can take place, using

supercritical fluids, at various temperatures, i.e., at room (ambient) temperature or at higher temperatures. FIG. **17** depicts an exemplary system in which the foaming operation and the forming of an article therefrom can be accomplished in the same overall operation at ambient, or room temperature. As can be seen therein, a mold comprising a lower mold body **61** having a mold cavity **62** and an upper mold body **63** shaped to conform to the mold cavity **62** are arranged so that mold body **61** is fixedly mounted within a chamber **64** and mold body **63** is movably mounted to move reciprocally into and out of cavity **62** using a suitable externally applied hydraulic jack or piston force, as shown by arrow **72**, via a suitable dynamic pressure seal **65**. A pliable sheet **66** of a polymer plastic material is mounted above cavity **62** of mold body **61** between two suitably shaped holders **67** so that, when mold body **63** is moved downwardly into cavity **62**, a cup-shaped article of polymer plastic material can be formed therebetween. Prior to forming the article, a supercritical fluid, e.g., CO_2 in its supercritical state, from a source **68** thereof, is supplied to chamber **64** via a suitable valve **69**, the supercritical fluid normally being supplied at a temperature higher than ambient temperature. Chamber **64** is pressurized to a relatively high pressure, e.g., 3000 p.s.i. (PMa), the temperature within chamber **64**, however, being maintained at a suitable temperature on the order of the critical temperature, or higher, of the supercritical fluid. The supercritical fluid in effect saturates the polymer sheet **66** after a time period which depends on the polymer material involved. The temperature in chamber **64** is reduced to room (ambient) temperature and, when the polymer sheet is saturated with supercritical fluid, the mold body **63** is moved downwardly into cavity **62** and, preferably, the pressure in the chamber is then reduced via the operation of pressure relief valve **70**. The drop in pressure causes a cell nucleation and cell expansion within the polymer material as the molding of the article occurs, thereby causing a foaming of the polymer material and the forming of an article from the foamed material, the article having a supermicrocellular structure. Accordingly, the article is both foamed and formed at room (ambient) temperature in one overall operation.

In the above disclosed embodiments, there is a finite time which is required for a polymer material to be come saturated with a supercritical fluid. i.e., for a sufficient amount of supercritical fluid to be introduced into the polymer to form a fluid/polymer solution which can be appropriately foamed to provide a desired supermicrocellular foamed material. While in some cases such time can be as low as 10 minutes, e g, when using a soft PVC material having a thickness of 1/16 (1.59 mm), in other cases longer times may be required depending on the thickness desired. While such embodiments can be useful in many applications, in other applications it may be desirable to reduce the time need for such purpose. For example, in order to enhance the ability to use the technique of the invention in some applications to achieve relatively high production rates for obtaining supermicrocellular formed material, it is often desirable to use much shorter saturation time periods. One technique for doing so is depicted in the system shown in FIG. **18** in which a supercritical fluid is introduced into an extrusion barrel **70**, for example, for injecting the saturated material into a mold.

As can be seen in the diagrammatic presentation of FIG. **18**, an extrusion barrel **70** utilizes a screw **71**, with integrated mixing elements **83**, of a type having irregular blades, as would be well known to those in the art, into which plastic pellets of a polymer material are introduced via a hopper assembly **72**. The extrusion barrel is heated so that the pellets become plasticized and reached a molten state as they are moved by the mixing screw along the barrel **70**, in a manner similar to that discussed with reference to FIGS. **14**, **15** and **16**. A source **82** of CO_2 gas is introduced into the extrusion barrel at a selected position along mixing screw **71** via the operation of a suitable flow control valve **73**, the temperature and pressure in the extrusion barrel at that point being controlled so as to be greater than the critical temperature and pressure for converting the CO_2 in gaseous form into CO_2 in its supercritical state. The CO_2 gas may be preheated before insertion, if desired, to prevent too sudden an increase in pressure in the barrel at the higher temperature of the barrel. Alternatively, the CO_2 gas can be converted to its supercritical state externally to the extrusion barrel said supplied to the mixing screw as a supercritical CO_2 fluid.

The supercritical CO_2 fluid is mixed with the molten polymer material by the mixing screw and such mixing enhances the subsequent diffusion into, and effective saturation of supercritical CO_2 fluid in, the polymer because the contact area of the two materials being mixed is increased by the mixing process and the depth required for diffusion is decreased thereby.

Thus, the supercritical CO_2 fluid is mixed with the molten polymer by the motion of the mixing screw to aid in forming a solution. As the mixture screw rotates, it generates a two-dimensional shear field in the mixed CO_2/polymer system. The bubbles of supercritical CO_2 fluid in the polymer melt are stretched along the shear directions of the shear field. The stretched bubbles are then broken into smaller spherical shaped bubbles by the perturbation of the laminar flow which is generated by the mixing screw. The irregular blades used in the mixing screw change the orientation of the CO_2/polymer interface relative to the streamlines, which change increases the efficiency of the laminar mixing occurring therein.

The CO_2/polymer mix is supplied to a static mixer **74** which continually changes the orientation of the CO_2/polymer interface relative to the streamlines and thereby also enhances the mixing process. Static mixers for use in an extrusion barrel are well known to the art and are made and sold commercially. The diameter of static mixer **74** should be small and the static mixer can comprise a selected number of mixer elements **75**, as further discussed below.

If the diameter of the static mixer elements is too large, the flow rate of the CO_2/polymer mixture therethrough is small and, consequently, the shear field generated by the static mixer elements is small. The spherical shapes of the bubbles would thereby be maintained because the surface tension would be dominant and, in effect, the surface tension would overcome the effect of the relatively small shear field. When the flow rate is too small, a static mixer is not effective for mixing the CO_2/polymer system into a solution because of such dominant surface tension. Hence, it is desirable to make the diameter of the static mixer relatively small.

The characteristic length of the static mixing which occurs in static mixer **74**, i.e., the striation thickness of the mixed CO_2/polymer layers, is approximately $d/2^n$ where d is the diameter of the static mixer elements and n is the number of the mixing elements **75**. Better mixing occurs when mixer elements having a small radius are used because such characteristics length of the mixing decreases as the diameter decreases, as well as when a relatively large number of mixing elements is used. The number of mixing elements and the diameters thereof can be selected so as to assure a satisfactory and adequate static mixing operation.

During the static mixing of the CO_2/polymer system, the CO_2 molecules in the bubbles also tend to diffuse somewhat

into the polymer melt material which surrounds each bubble. However, the primary diffusion operation takes place in a diffusion chamber **76** into which the two-phase gas/polymer mixture is introduced. The mixture then becomes a complete single-phase solution in the diffusion chamber as the CO_2diffuses into the polymer therein. The CO_2 concentration in the single-phase CO_2/polymer solution thereby produced is substantially uniform throughout the solution and the solution is effectively homogeneous. If the supercritical CO_2 fluid does not diffuse into and saturate the polymer uniformly and homogeneously, the foamed structure that is ultimately formed will not be uniform because the cell morphology strongly depends on the local gas concentration in the solution.

The homogeneous and uniform fluid/polymer solution in diffusion chamber **76** is then heated in a heating section **77** thereof where the solution is rapidly heated (in a typical case the temporary may rise from about 190° C. to about 245° C., in about 1.0 second, for example), so as to form nucleated cells in the saturated solution due to the thermodynamic instability which is created because of the decreased ability of the fluid/polymer solutions at the higher temperature. The greater the decrease in solubility which occurs, the higher the cell nucleation rate and the larger the number of cells nucleated. To prevent the nucleated cells from growing in the extrusion barrel **70** a high barrel pressure is maintained. The solution with nucleated cells is then injected into a mold cavity **78** of a mold **79**, the pressure in the mold cavity being controlled by providing a counter pressure to prevent cell growth during the mold filling process. The counter pressure is provided by the insertion of air under pressure from a source **80** thereof via shut-off valve **81**. Finally, cell growth occurs inside the mold cavity when the mold cavity is expanded and the pressure therein is reduced rapidly, thereby producing a pressure instability which enhances cell growth.

Accordingly, expansion of the mold provides a molded and foamed article having the small cell sizes and high cell densities desired. By using a mixing screw for providing a shear field which produces a laminar flow of the mixed materials and then by using both a static mixer having small diameter mixing elements and a selected number of such mixing elements and a diffusion chamber, saturation of the polymer material with supercritical CO_2 fluid occurs. The time period required to provide such saturation can be reduced from that required in the embodiments of the invention discussed previously so that it is possible to achieve continuous operation at relatively high production rates that would not be possible when longer saturation times are needed.

The provision of extremely small cell sizes and high densities thereof in a foamed polymer material, as achieved when using supercritical fluids to provide the foaming operation, as described with reference to the above embodiments of the inventions brings about substantially improved properties for the foamed materials obtained, particularly compared with previous standard cellular or microcellular foamed materials. Thus, the mechanical strengths and toughness thereof are substantially greater, even when the weight of the material (i.e., the material density) is considerably reduced. Moreover, less polymer material is used in the process and, accordingly, material is conserved and the costs thereof are reduced.

While the embodiments of the invention described above represent preferred embodiments thereof, modifications thereof and still other embodiments may occur to those in the art within the spirit and scope of the invention. Hence, the invention is not to be construed as limited to the specific embodiments thereof described above, except as defined by the appended claims.

What is claimed is:

[1. A system for producing a foamed material comprising extrusion means

means connected to said extrusion means for supplying a material to be foamed to said extrusion means;

die means for shaping material;

said extrusion means connected to said die means for providing extruded material to said die means;

means for heating and extrusion means to cause said extrusion means to provide said extruded material at a higher temperature than room temperature to permit said die means to produce shaped continuous heated material;

means for engaging and transporting said shaped continuous heated material through an enclosed volume;

means connected to said enclosed volume for supplying supercritical fluid to said enclosed volume to introduce said supercritical fluid into said shaped continuous heated material at a higher pressure than atmospheric pressure;

means for retaining said shaped continuous heated material within said enclosed volume for a sufficient client time period to permit said supercritical fluid to saturate said shaped continuous heated material;

means for removing said shaped continuous heated material saturated with said supercritical fluid from said enclosed volume at a pressure which is less than said higher pressure; and

foam heating means for heating said material which has been removed from said enclosed volume so as to produce shaped continuous heated foamed material having a plurality of cells distributed substantially throughout said foamed material.**]**

[2. A system in accordance with claim **1** wherein said die means is a sheet die means for providing a continuous sheet of heated material.**]**

[3. A system in accordance with claim **2** wherein;

said engaging and transporting means includes a plurality of rollers maintained at a substantially constant temperature for transporting said continuous sheet of heated material through said enclosed volume; and

said retaining means including means for controlling the position of at least one of said rollers so as to control the residence time of said continuous sheet of heated material as it is transported through said enclosed volume.**]**

[4. A system in accordance with claim **2** wherein said removing means includes a dynamic pressure seal through which said heated sheet material is removed from said enclosed volume and further including chilled roller means engaging and transporting said removed heated sheet material from said enclosed volume at a temperature below and higher temperature.**]**

[5. A system in accordance with claim **2** wherein said foam heating means includes at least one heater and heater transporting means engaging said removed sheet material for transporting said removed sheet material along a path adjacent said heaters.**]**

[6. A system in accordance with claim **5** wherein said heater transporting means includes:

at least one roller; and

means for controlling the position of at least one of said rollers to control the time over what said sheet is transported along said path adjacent said heaters.**]**

[7. A system in accordance with claim **2** and further including means for further engaging said removed continuous sheet of heated foamed material for annealing said continuous sheet of heated foamed material.]

[8. A system for providing a foamed material comprising

extrusion means;

die means connected to said extrusion means for shaping material;

means connected to said extrusion means for supplying a material to be foamed to said extrusion means;

means for heating said extrusion means to place said material into a molten state during the extrusion thereof in said extrusion means;

means connected to said extrusion means for supplying a supercritical fluid at a higher pressure than atmospheric pressure to said extrusion means to introduce said supercritical fluid into said molten material so that said material is saturated with said supercritical fluid to form a solution, said supercritical fluid saturated material being supplied from said extrusion means to said die means to produce a shaped continuous material saturated with said supercritical fluid;

means for engaging and transporting said shaped continuous material through an enclosed volume having a pressure which is lower than said higher pressure so as to produce cell nucleation in said shaped continuous material and means for maintaining the temperature of said shaped continuous material at a selected temperature as said material is transported through said enclosed volume at said lower pressure; and

foam heating means comprising heaters for heating said shaped continuous material as it exits said enclosed volume so as to produce a shaped continuous foamed material having a plurality of cells distributed substantially throughout said shaped continuous foamed material.]

[9. A system in accordance with claim **8** wherein said die means is a sheet die means for providing a continuous sheet of material.]

[10. A system in accordance with claim **9** wherein said transporting and temperature maintaining means includes a plurality of chilled rollers.]

[11. A system in accordance with claim **10** wherein said engaging and transporting means further includes means for controlling the position of at least one said rollers so as to control the residence time of said continuous sheet of material as it is transported through said enclosed volume.]

[12. A system in accordance with claim **9** wherein said foam heating means includes:

at least one roller engaging and transporting said continuous sheet of material exiting said enclosed volume along a path adjacent said heaters; and

means for controlling the position of at least one of said one or more rollers to control the time over which the continuous sheet of material is transported along said path adjacent said heaters.]

[13. A system in accordance with claim **9** and further including means further engaging said continuous sheet of foamed material for annealing said continuous sheet of foamed material.]

[14. A system for producing a foamed material comprising

extrusion means;

die means connected to said extrusion means for shaping material;

means for supplying a material to be foamed to said extrusion means;

means for heating said extrusion means to place said material in a molten state during extrusion thereof in said extrusion means;

means connected to said extrusion means for supplying a supercritical fluid at a higher pressure than atmospheric pressure to said extrusion means to introduce said supercritical fluid into said molten material so that said molten material is effectively saturated with said supercritical fluid, said material which is saturated with said supercritical fluid being supplied from said extrusion means to said die means to produce a shaped continuous material;

means for engaging and transporting said shaped continuous material through an enclosed volume having a pressure which is substantially the same as said higher pressure and means for maintaining the temperature of said shaped continuous material at a selected temperature as said shaped continuous material is transported through said enclosed volume at said higher pressure; and

means for reducing the pressure and the temperature of said shaped continuous material as it exits from said enclosed volume so as to produce a shaped continuous foamed material having a plurality of cells distributed substantially throughout said shaped continuous foamed material.]

[15. A system in accordance with claim **14** wherein said die means is a sheet die means for providing the continuous sheet of material.]

[16. A system in accordance with claim **15** wherein said transporting and temperature maintaining means includes a plurality of rollers.]

[17. A system in accordance with claim **16** wherein said engaging and transporting means further include means for controlling the position of at least one of said rollers to control the residence time of said continuous sheet of material as it is transported through said enclosed volume.]

[18. A system in accordance with claim **15** and further including at least one chilled roller positioned near the exit of said enclosed volume through which said continuous sheet of foamed material passes so as to maintain the foamed condition thereof.]

[19. A system in accordance with claim **15** and further including means further engaging said continuous sheet of foamed material for annealing said continuous sheet of foamed material.]

[20. A system for producing a foamed material comprising

extrusion means;

die means connected to said extrusion means for shaping material;

means for supplying a material to be foamed to said extrusion means;

means for heating said extrusion means to place said material in a molten state during extrusion thereof in said extrusion means;

means connected to said extrusion means for supplying a supercritical fluid at a higher pressure than atmospheric pressure to said extrusion means to introduce said supercritical fluid into said molten material so that said molten material is substantially saturated with said supercritical fluid, said saturated molten material being supplied from said extrusion means to said die means to produce a shaped continuous material;

means for engaging and transporting said shaped continuous material through a first enclosed volume having a controllable pressure which is lower than said higher pressure to produce cell nucleation in said shaped continuous material and means for maintaining the temperature of said shaped continuous material at a selected temperature to maintain said cell nucleation as said shaped continuous material is transported through said first enclosed volume at said lower pressure; and

means for engaging said shaped continuous material as it exits from said first enclosed volume and for transporting said exiting material into a second enclosed volume having a pressure lower than said controllable pressure so as to produce a shaped continuous foamed material having a plurality of cells distributed substantially throughout said shaped continuous foamed material.]

[**21**. A system in accordance with claim **20** wherein said die means is a sheet die means for providing a continuous sheet of material.]

[**22**. A system in accordance with claim **20** wherein the pressure in said second enclosed volume is at atmospheric pressure.]

[**23**. A system in accordance with claim **20** and further including means for controlling the residence times of said shaped continuous material in said first and second enclosed volumes.]

[**24**. A system for producing a foamed material comprising

a barrel;

a screw member mounted for rotation within the barrel and having a plurality of irregular blades positioned on said screw member;

means for introducing a material to be formed into said barrel for movement along said barrel toward said irregular blades by said screw member;

means for heating said barrel to place said material into a molten state;

means for introducing a supercritical fluid into said barrel at said irregular blades at a temperature and pressure above the critical temperature and pressure of said supercritical fluid for mixing said fluid with said molten material to provide a mixture thereof;

a static mixer for receiving said mixture and for changing the orientations of the interfaces between said material and said supercritical fluid in the mixture;

a diffusion chamber for receiving said mixture from said static mixer to diffuse the supercritical fluid into the material to be foamed, said static mixture and diffusion chamber providing to provide a solution of said material substantially saturated with said fluid and having a substantially uniform concentration of fluid throughout said solution;

means for rapidly heating said solution to provide a plurality of nucleated cells in said solution at a pressure which prevents expansion of said cells in the solution;

means for receiving said solution from said diffusion chamber and for expanding the cells in said solution to provide a foamed material.]

[**25**. A system in accordance with claim **24** wherein said receiving means includes

a mold for receiving said solution from said diffusion chamber and having a counter pressure for initially preventing expansion of said cells in the solution; and

means for subsequently rapidly reducing the counter pressure in said mold to expand the cells in said solution to provide a molded foamed article in said mold.]

26. A system for producing microcellular foamed material comprising:

an extruder including an extruder barrel constructed to house a polymer processing mixing screw, the extruder having an inlet at an inlet end thereof designed to receive a precursor of microcellular foamed material, an outlet at an outlet end thereof designed to release microcellular foamed material from the extruder, and an enclosed passageway connecting the inlet with the outlet constructed and arranged to receive a foaming agent in the vicinity of a mixing section of the polymer processing mixing screw and to contain a homogeneous mixture of the foaming agent with material to be foamed in a fluid state at an elevated pressure and temperature above the critical temperature and pressure of the foaming agent within the passageway and to advance the mixture as a fluid stream within the passageway in a downstream direction from the inlet end toward the outlet end; and

a nucleating pathway associated with the outlet end constructed and arranged to nucleate the homogeneous mixture at a rate sufficient to produce microcellular foamed material and to release the material to be foamed to a region downstream of the nucleator at a pressure lower than the elevated pressure.

27. A system as in claim 26, wherein the enclosed passageway is constructed and arranged to contain a supercritical fluid admixed with the material to be foamed and to maintain the supercritical fluid in a supercritical state therein.

28. A system as in claim 26, wherein the region downstream of the nucleator at a pressure lower than the elevated pressure is a molding chamber.

29. A system as in claim 26, wherein the passageway is connectable to a source of a foaming agent comprising carbon dioxide.

30. A system as in claim 26, wherein the passageway is connectable to a source of a foaming agent consisting of carbon dioxide.

31. A system as in claim 26, wherein the passageway is connectable to a source of a foaming agent comprising supercritical carbon dioxide.

32. A system as in claim 26, wherein the passageway is connectable to a source of a foaming agent consisting of supercritical carbon dioxide.

33. A system as in claim 26, wherein the passageway is connectable to a source of a foaming agent comprising a supercritical fluid.

34. A system as in claim 26, wherein the extruder includes a heatable barrel constructed and arranged to contain molten thermoplastic polymeric material.

35. A system as in claim 26, wherein the outlet of the extruder comprises a sheet die.

36. A system as in claim 26, wherein the nucleator is a reduced cross-section orifice capable of nucleating the product in the passageway via rapid pressure drop.

37. A system as in claim 26, wherein the nucleator comprises a sheet die.

38. A system as in claim 26, wherein the extruder barrel contains a screw and the extruder inlet comprises a hopper assembly for receiving polymer pellets.

39. A system as in claim 26, wherein the enclosed passageway of the extruder is constructed and arranged to form the product comprising a single-phase solution of molten thermoplastic polymeric material and supercritical fluid and to advance the single-phase solution in the enclosed passageway.

40. A system as in claim 26, constructed and arranged to produce microcellular polymeric material, wherein the extruder includes a heatable barrel, containing a screw, constructed and arranged to contain molten thermoplastic polymeric material and to introduce a foaming agent consisting of carbon dioxide, via the passageway, into the molten polymeric material and to form a single-phase solution of molten polymeric material and carbon dioxide above the critical temperature and pressure of carbon dioxide and to advance the single-phase solution in the barrel and to nucleate the single-phase solution at the nucleator by subjecting the single-phase solution to a rapid pressure drop, and the extruder inlet comprises a hopper assembly for receiving polymer pellets.

41. A system as in claim 40, wherein the outlet of the extruder comprises a sheet die.

42. A system as in claim 40, wherein the nucleator comprises a sheet die.

43. A system for producing polymeric microcellular molded foamed material comprising:

an extruder having an inlet for receiving a precursor of a foamed material at an inlet end thereof, an outlet at an outlet end thereof, and an enclosed passageway connecting the inlet with the outlet constructed and arranged to contain a product of the mixture of a supercritical fluid and molten material to be foamed within the passageway and to maintain the product above the critical temperature and pressure of the supercritical fluid therein:

a nucleator associated with the passageway capable of nucleating the product in the passageway in the absence of an auxiliary nucleating agent;

an orifice between the inlet and the outlet, fluidly connectable to a source of supercritical fluid or supercritical fluid precursor arranged such that supercritical fluid, admixed with molten material in the extruder, can be maintained in a supercritical state in the extruder; and

a molding cavity fluidly connected to the outlet of the extruder.

44. A system as in claim 43, including a source of counter pressure associated with the molding cavity.

45. A system as in claim 44, wherein the source of counter pressure is connected to the molding cavity via a conduit including a shut-off valve.

46. A system as in claim 45, wherein the source of counter pressure is a source of air under pressure.

47. A system as in claim 43, wherein the source of counter pressure is a source of air under pressure.

48. A system as in claim 43, wherein the molding cavity is expandable.

49. A system as in claim 43, constructed an arranged to produce molded microcellular material.

50. A system as in claim 43, wherein the orifice is connectable to a source of a foaming agent comprising carbon dioxide.

51. A system as in claim 43, wherein the orifice is connectable to a source of a foaming agent consisting of carbon dioxide.

52. A system as in claim 43, wherein the orifice is connectable to a source of a foaming agent comprising supercritical carbon dioxide.

53. A system as in claim 43, wherein the orifice is connectable to a source of a foaming agent consisting of supercritical carbon dioxide.

54. A system as in claim 43, wherein the orifice is connectable to a source of a foaming agent comprising a supercritical fluid.

55. A system as in claim 43, wherein the extruder includes a heatable barrel constructed and arranged to contain molten thermoplastic polymeric material and to introduce carbon dioxide, via the orifice, into the molten polymeric material.

56. A system in claim 43, wherein the extruder barrel contains a screw and the extruder inlet comprises a hopper assembly for receiving polymer pellets.

57. A system as in claim 43, wherein the extruder barrel is constructed and arranged to form a single-phase solution of molten polymer material and foaming agent above the critical temperature and pressure of the foaming agent and to advance the single-phase solution in the barrel.

58. A system as in claim 43, constructed and arranged to produce molded microcellular polymeric material, wherein the extruder includes a heatable barrel, containing a screw, constructed and arranged to contain molten thermoplastic polymeric material and to introduce a foaming agent consisting of carbon dioxide, via the orifice, into the molten polymeric material and to form a single-phase solution of molten polymer material and carbon dioxide above the critical temperature and pressure of carbon dioxide and to advance the single-phase solution in the barrel and to nucleate the single-phase solution at the nucleator by subjecting the single-phase solution to a rapid pressure drop, and the extruder inlet comprises a hopper assembly for receiving polymer pellets.

59. A system for producing microcellular foamed material comprising:

an extruder including an extruder barrel constructed to house a polymer processing screw, the extruder having an inlet at an inlet end thereof designed to receive a precursor of microcellular foamed material, an outlet at an outlet end thereof designed to release microcellular foamed material from the extruder, and an enclosed passageway connecting the inlet with the outlet constructed and arranged to receive a foaming agent in the vicinity of the polymer processing screw and to form therein a homogeneous, single-phase solution of the foaming agent with material to be foamed in a fluid state at an elevated pressure and temperature above the critical temperature and pressure of the foaming agent within the passageway and to advance the solution as a fluid stream within the passageway in a downstream direction from the inlet end toward the outlet end; and

a nucleating pathway associated with the outlet end constructed and arranged to nucleate the homogeneous mixture at a rate sufficient to produce microcellular foamed material and to release the material to be foamed to a region downstream of the nucleator at a pressure lower than the elevated pressure.

60. A system as in claim 43, wherein the extruder includes a barrel constructed to house a polymer processing screw, the orifice being positioned in the barrel in the vicinity of the polymer processing screw.

61. A system as in claim 35, wherein the extruder barrel is constructed to house a polymer processing mixing screw and the orifice is positioned in the barrel in the vicinity of a mixing section of the screw.

62. A system as in claim 43, wherein the enclosed passageway is constructed and arranged to form a single-phase solution of foaming agent and polymeric material therein.

* * * * *