US00RE37726E

(19) **United States**

(12) **Reissued Patent**

Tanaka et al.

(10) **Patent Number: US RE37,726 E**

(45) **Date of Reissued Patent: Jun. 4, 2002**

(54) **METHOD FOR TRANSFERRING HOT MELT INK TO A RECORDING MEDIUM**

(75) Inventors: **Hideshi Tanaka**, Yokohama; **Itsuo Takanashi**, Kamakura; **Shigeaki Tada**, Hiratsuka; **Toshinori Takahashi**, Kawasaki, all of (JP)

(73) Assignee: **Victor Company of Japan, Ltd.**, Yokohama (JP)

(21) Appl. No.: **09/694,850**

(22) Filed: **Oct. 20, 2000**

Related U.S. Patent Documents

Reissue of:

(64) Patent No.: **5,277,501**
Issued: **Jan. 11, 1994**
Appl. No.: **07/990,695**
Filed: **Dec. 15, 1992**

(30) **Foreign Application Priority Data**

Dec. 19, 1991 (JP) 2-354685

(51) **Int. Cl.**[7] **B41J 2/315**

(52) **U.S. Cl.** **400/120.18**; 156/240; 346/76.1; 347/193; 347/171

(58) **Field of Search** 400/120.01, 240.3, 400/470, 120.18, 120.13; 346/76.1, 135.1; 156/240, 230, 235, 239, 310; 283/77, 109; 347/171, 105, 193, 212; 427/265, 164

(56) **References Cited**

U.S. PATENT DOCUMENTS

4,503,095	A	*	3/1985	Seto et al.	427/265
4,527,171	A	*	7/1985	Takanashi et al.	347/212
4,586,834	A	*	5/1986	Hachisuga et al.	400/120.13
4,588,315	A	*	5/1986	Seto et al.	427/265
4,704,615	A	*	11/1987	Tanaka	347/212
4,724,025	A	*	2/1988	Nishikawa	156/230
4,801,473	A	*	1/1989	Creagh et al.	427/164
4,873,134	A	*	10/1989	Fulton et al.	347/105
4,914,079	A	*	4/1990	Takei et al.	156/240
5,011,570	A	*	4/1991	Ohbayashi	156/310
5,060,981	A	*	10/1991	Fossum et al.	283/109
5,120,383	A	*	6/1992	Takei et al.	156/240
5,147,489	A	*	9/1992	Scrutton et al.	156/240

FOREIGN PATENT DOCUMENTS

GB	2045688	* 11/1980	156/240
JP	0046987	* 4/1980	156/240
JP	0047690	* 3/1982	156/240
JP	0070690	* 5/1982	156/240
JP	277466	* 12/1986	

* cited by examiner

Primary Examiner—Eugene Eickholt

(74) *Attorney, Agent, or Firm*—Anderson Kill Olick; Eugene Lieberstein; Michael N. Meller

(57) **ABSTRACT**

The present invention discloses a method for thermally transferring an ink pattern to a recording medium, comprising the steps of preparing an ink sheet provided with a hot-melt and/or hot-sublimable ink layer and a transparent material sheet provided with a transparent hot-melt material layer, thermally producing an ink pattern on the transparent material layer of the transparent material sheet by heating the ink sheet with thermal head, and thermally transferring the ink pattern to the recording medium together with the transparent hot-melt material layer. And an another method comprising the steps of preparing an ink sheet having a transparent hot-melt material frame layer and a hot-melt and/or hot-sublimable ink frame layer, thermally transferring the transparent hot-melt material frame layer onto a surface of a platen roller, thermally producing an ink pattern on the transparent hot-melt material frame layer on the platen roller by heating the hot-melt and/or hot-sublimable ink frame layer with a thermal head, and thermally transferring the ink pattern together with the transparent hot-melt material frame layer onto a recording medium.

2 Claims, 5 Drawing Sheets

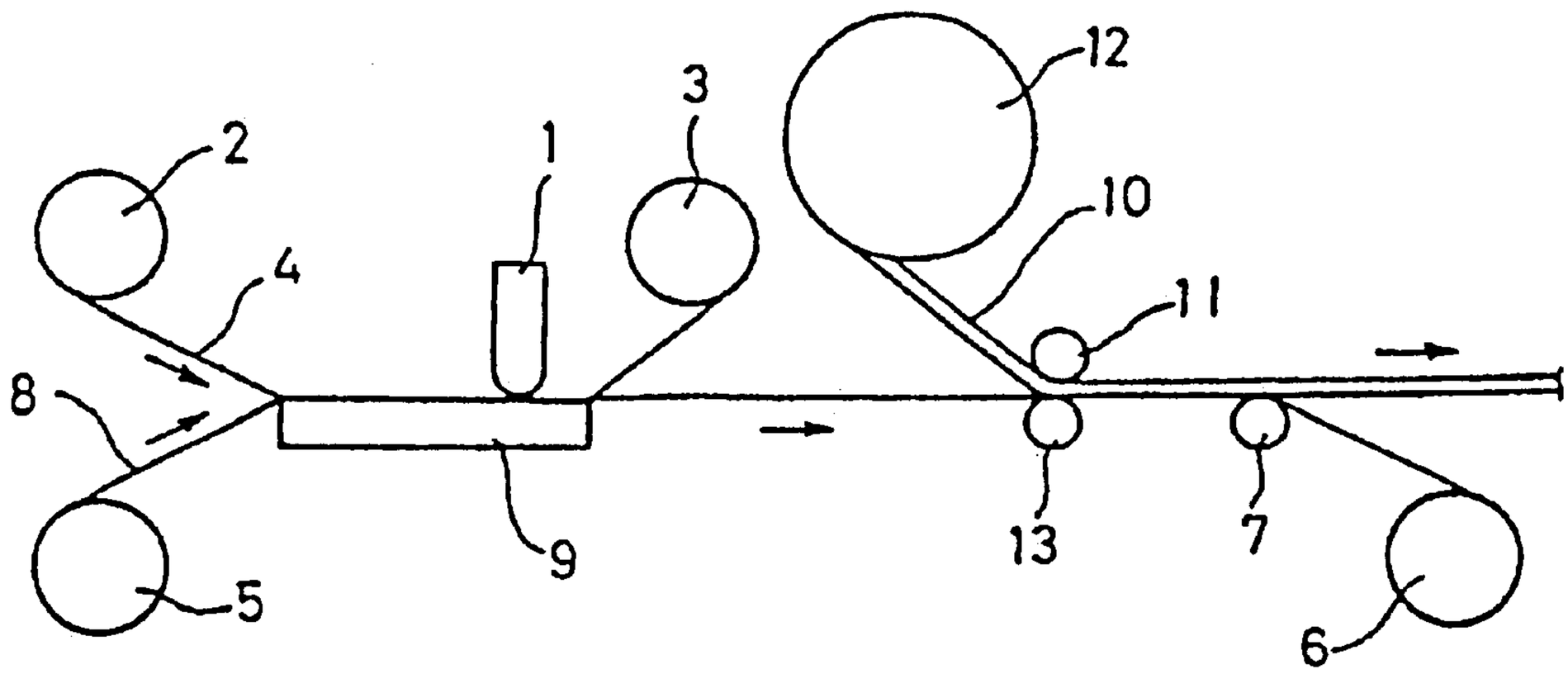

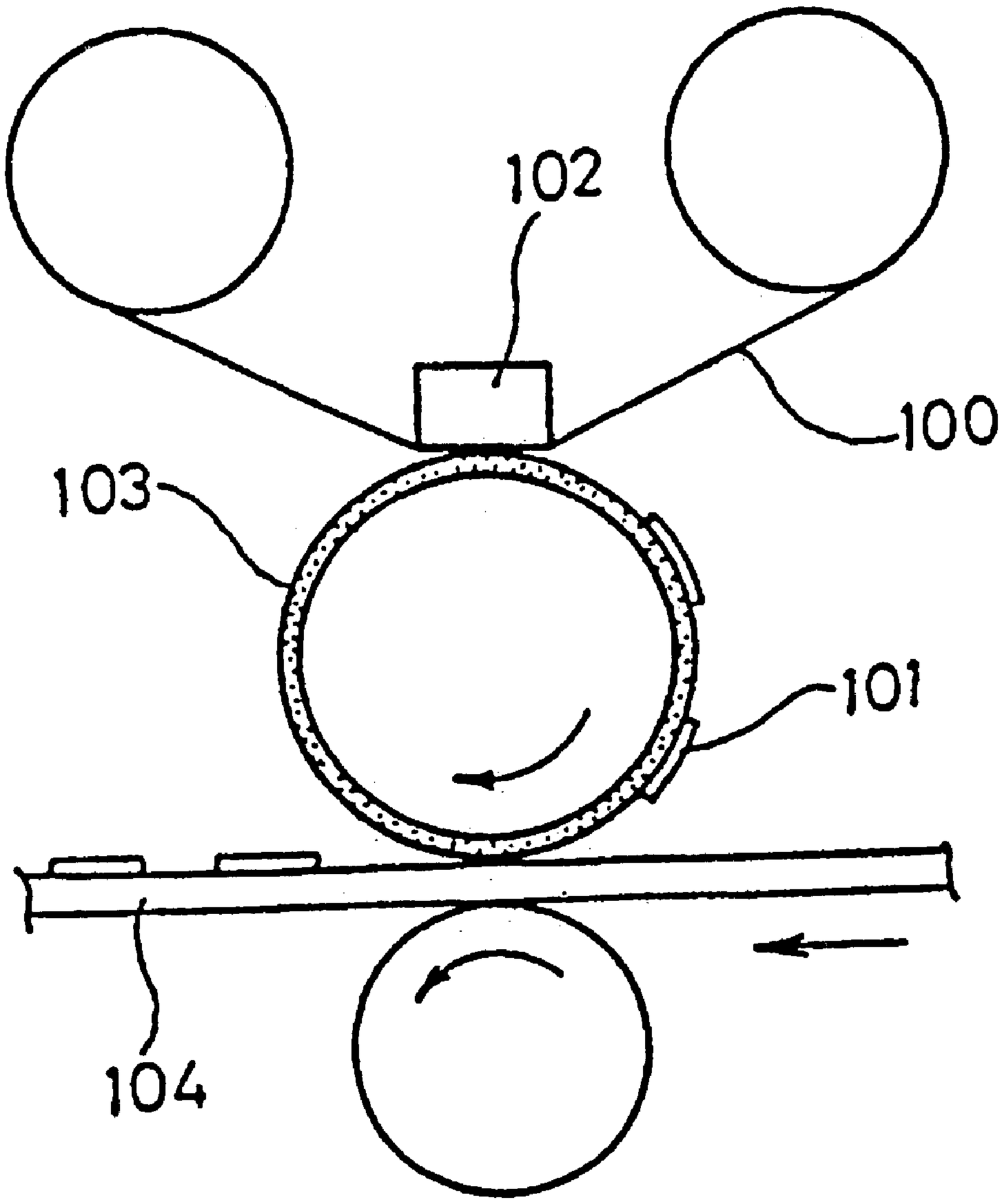

Fig.1 PRIOR ART

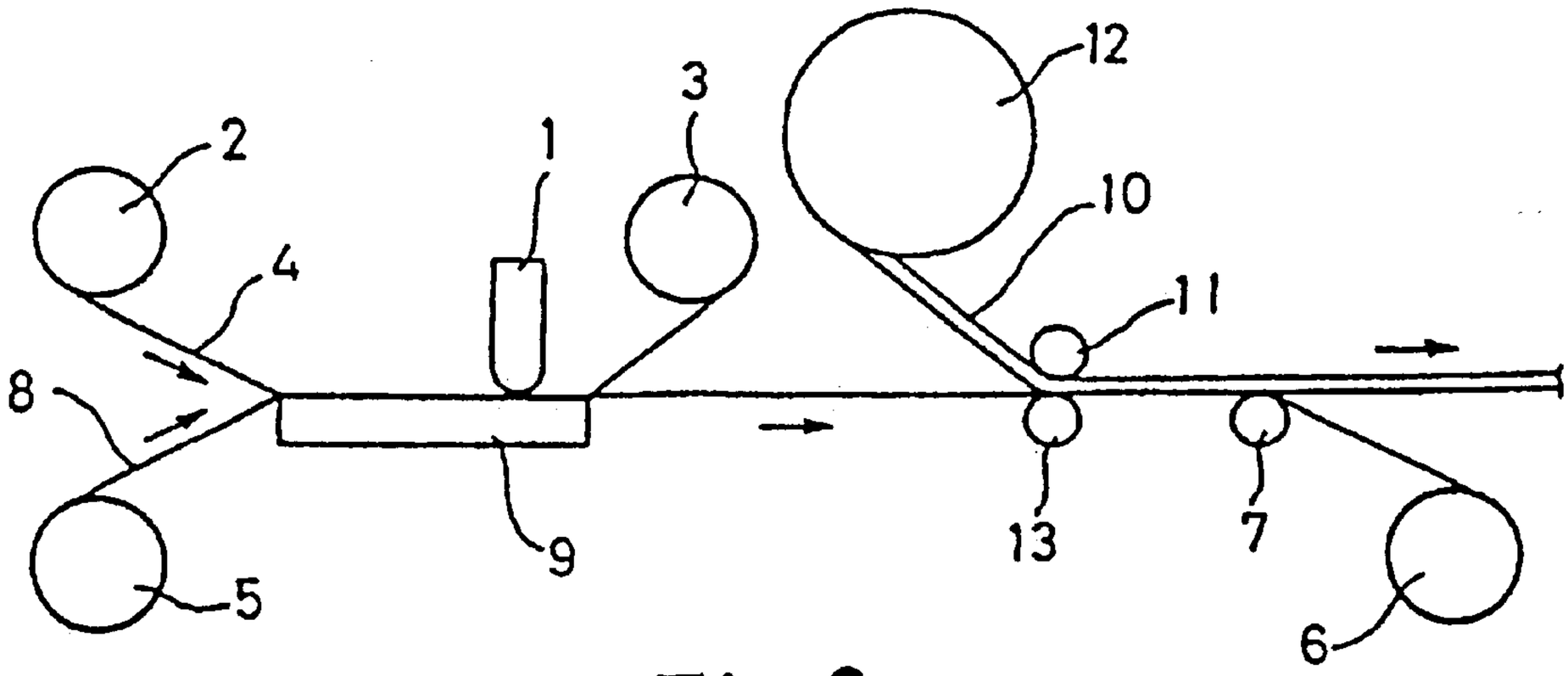

Fig.2

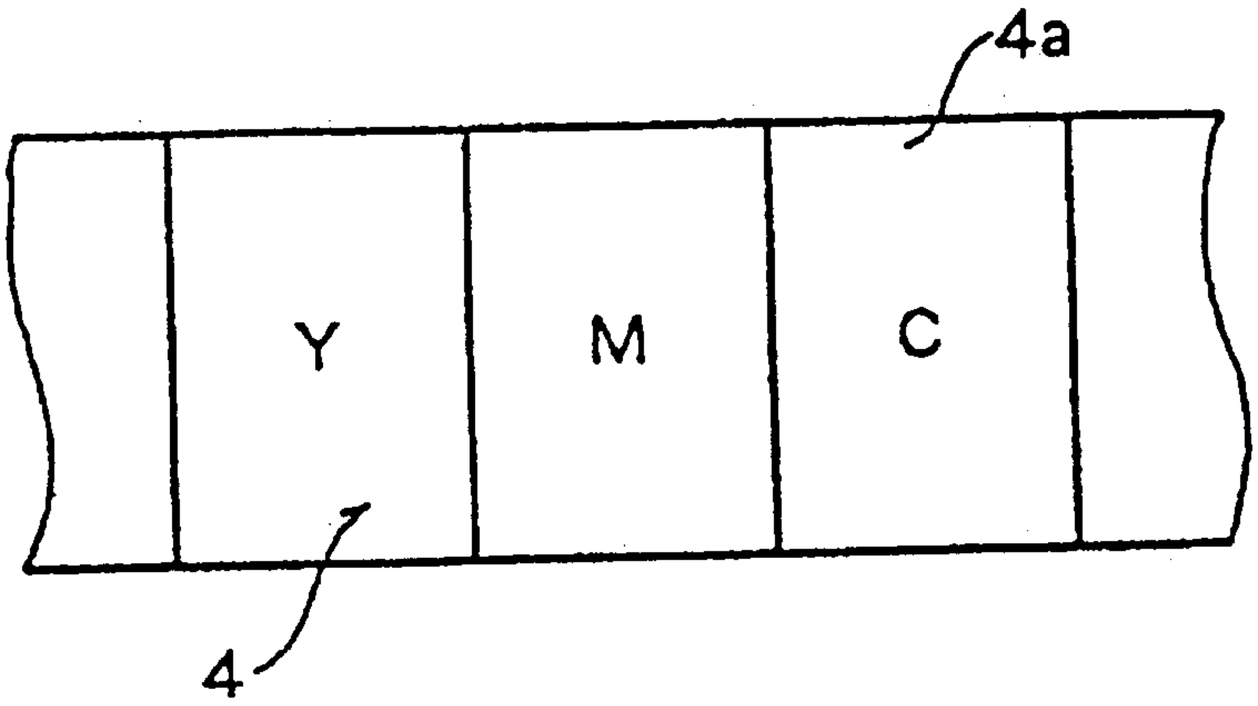

Fig.3

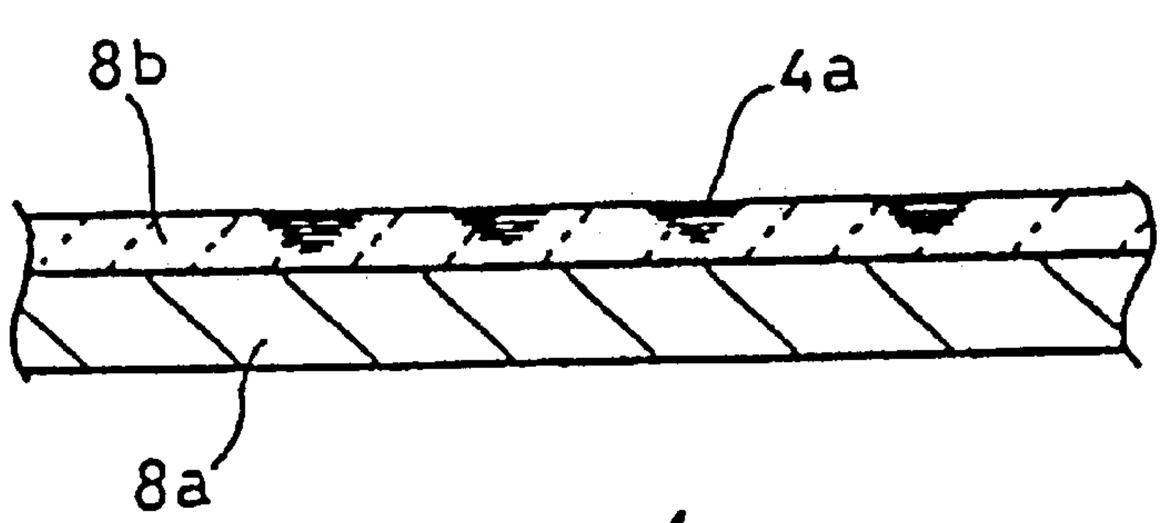

Fig.4

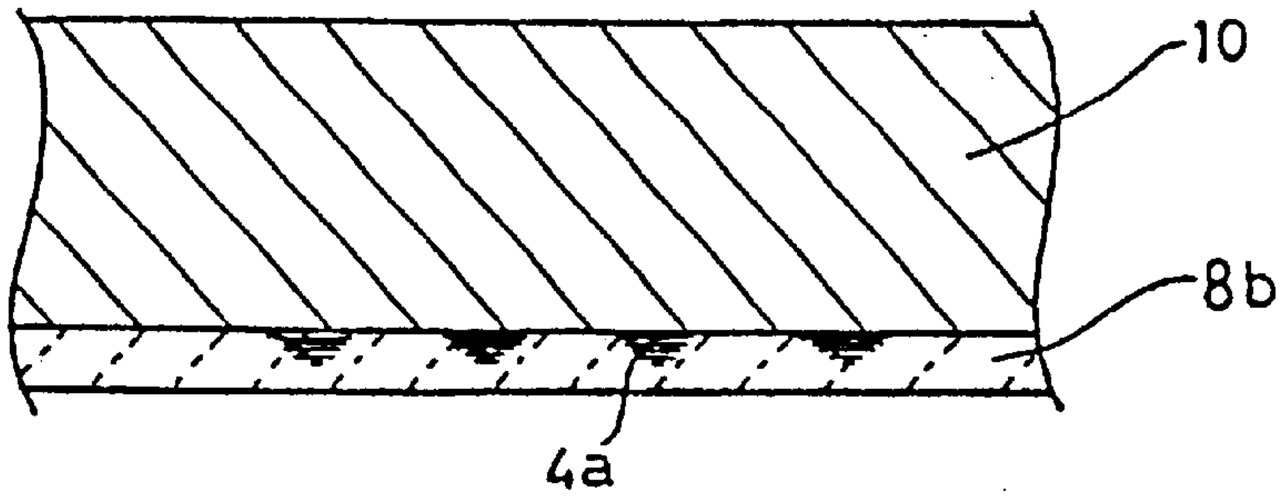

Fig.5

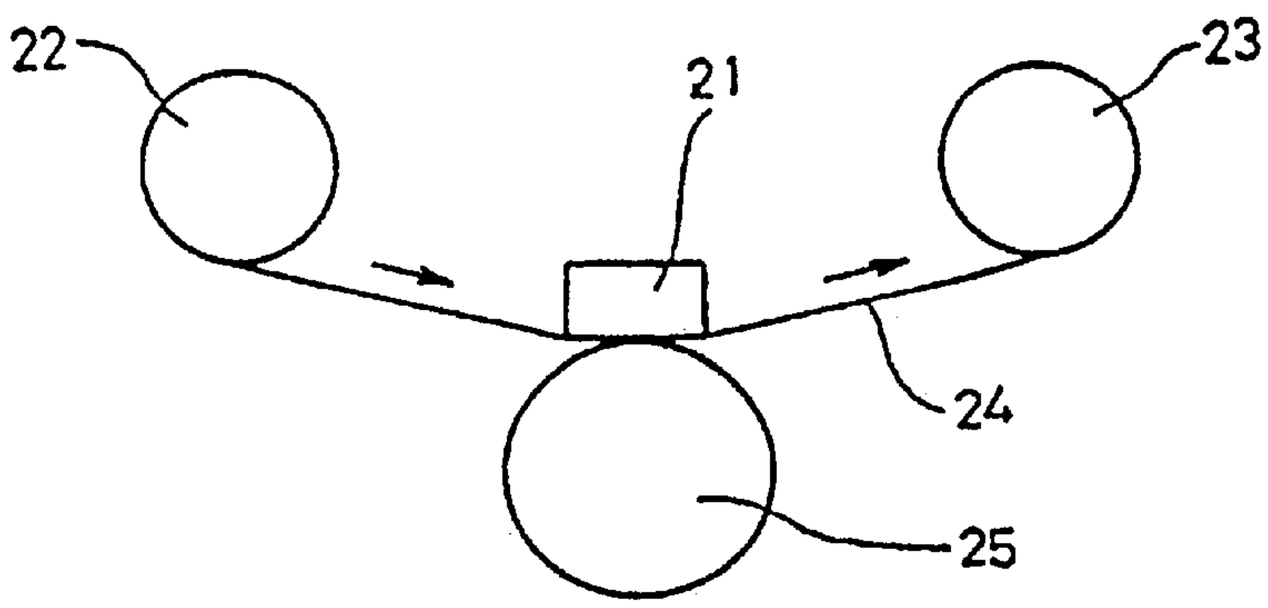

Fig.6

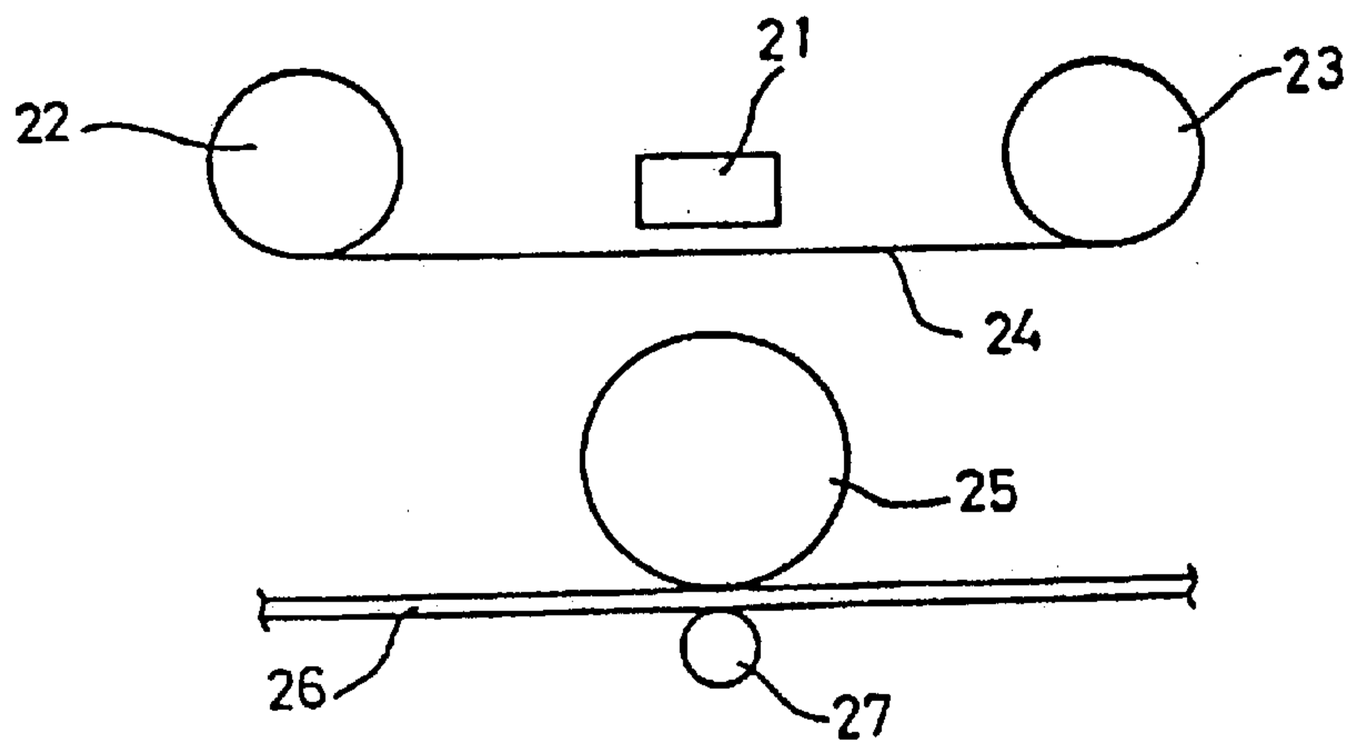

Fig.7

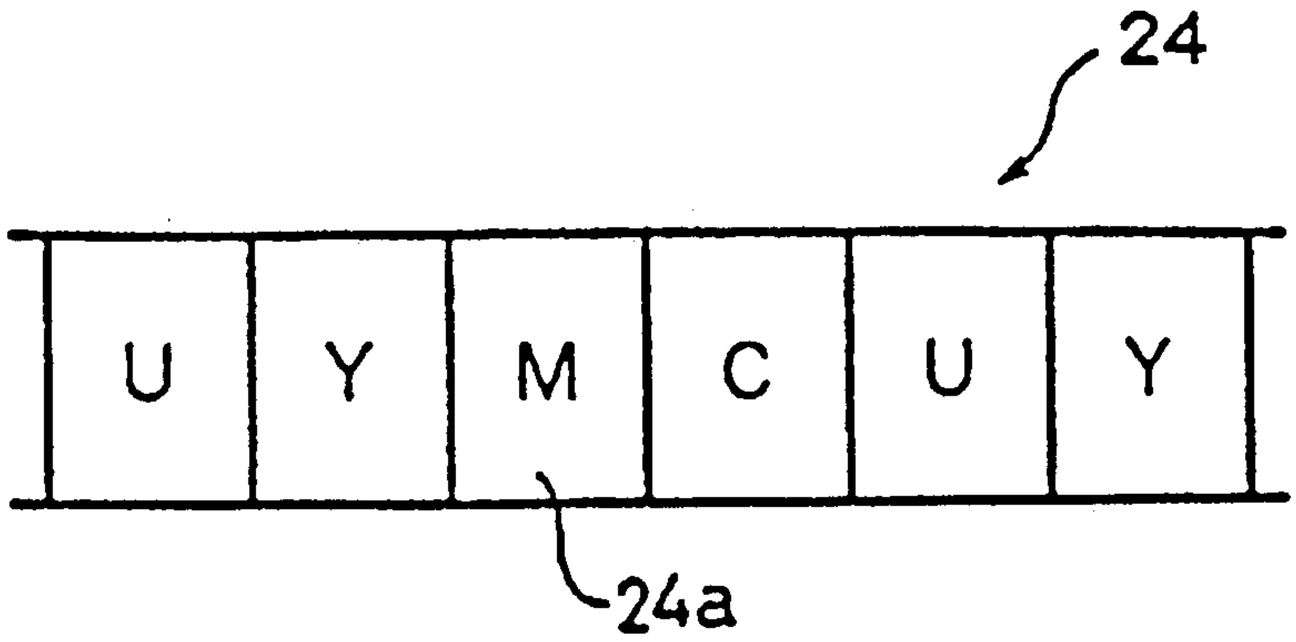

Fig.8

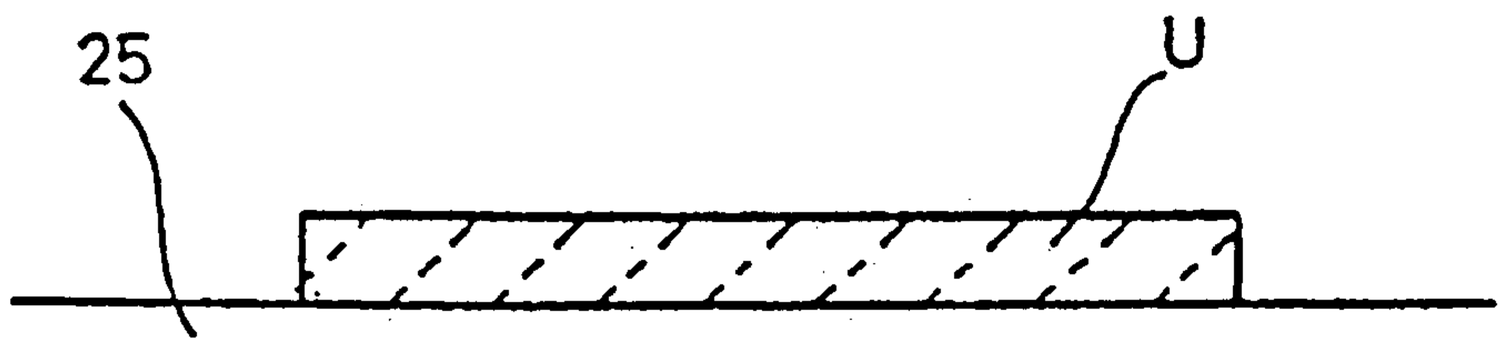

Fig.9

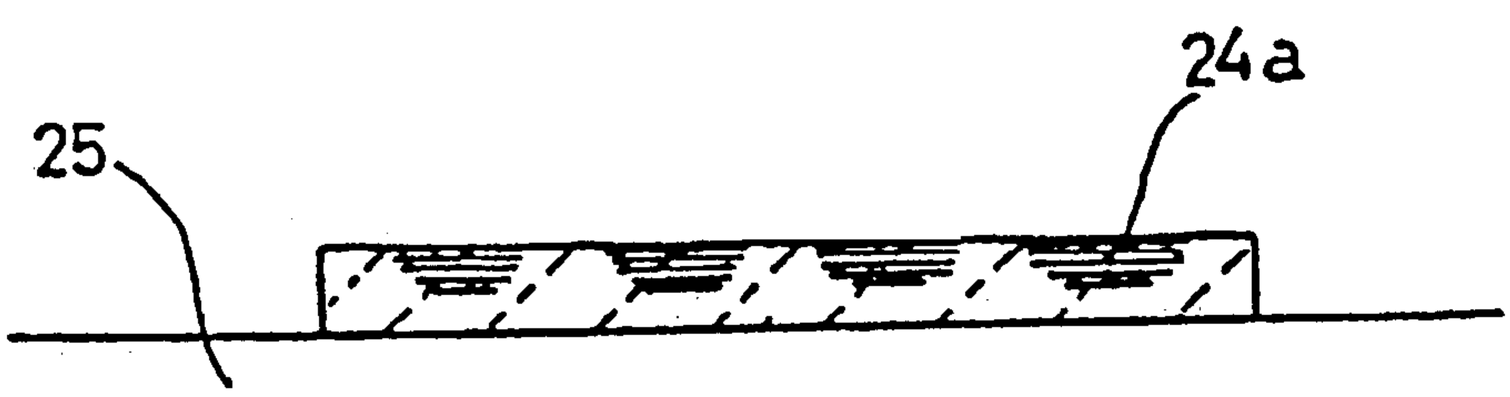

Fig.10

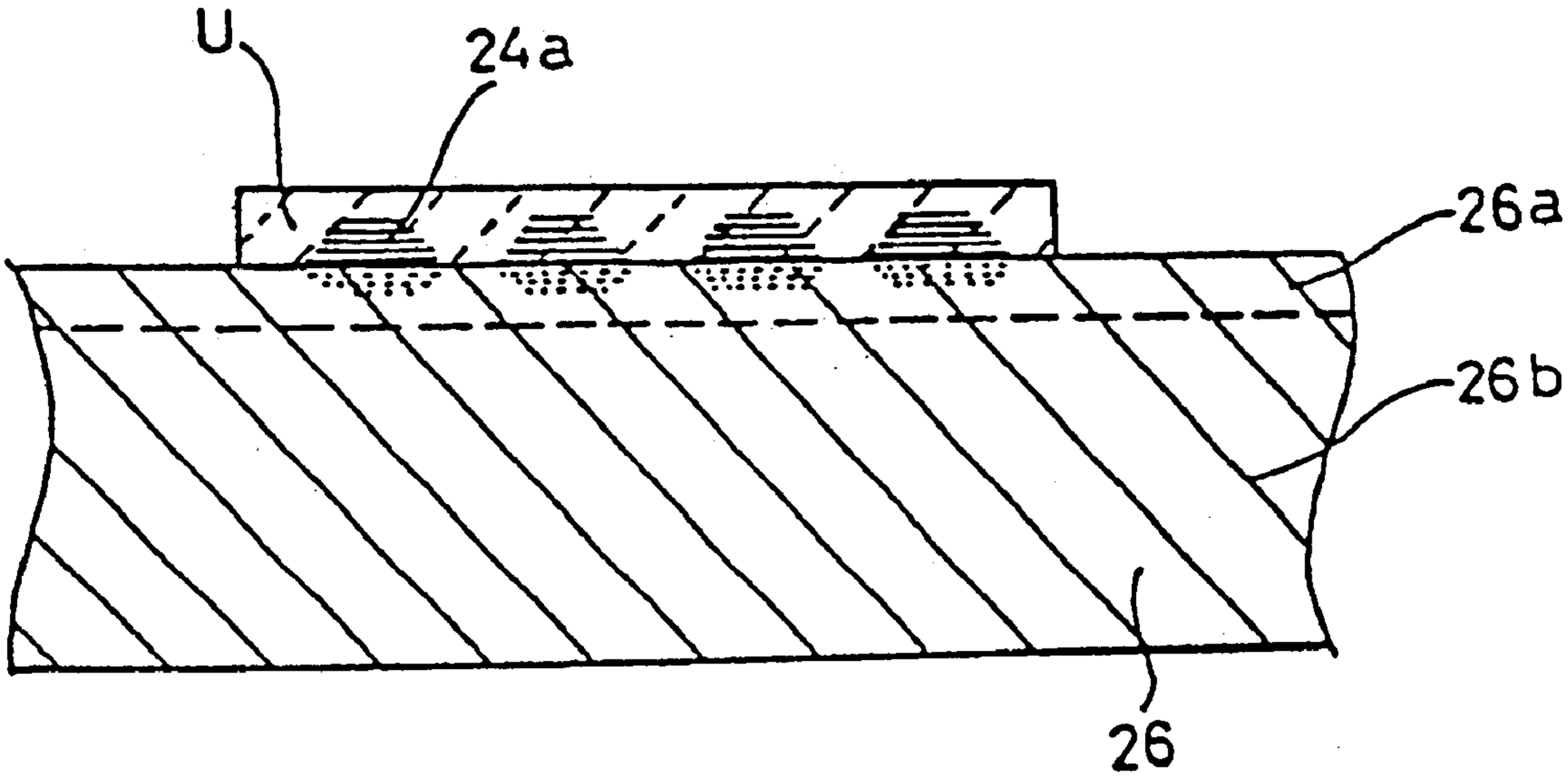

Fig.11

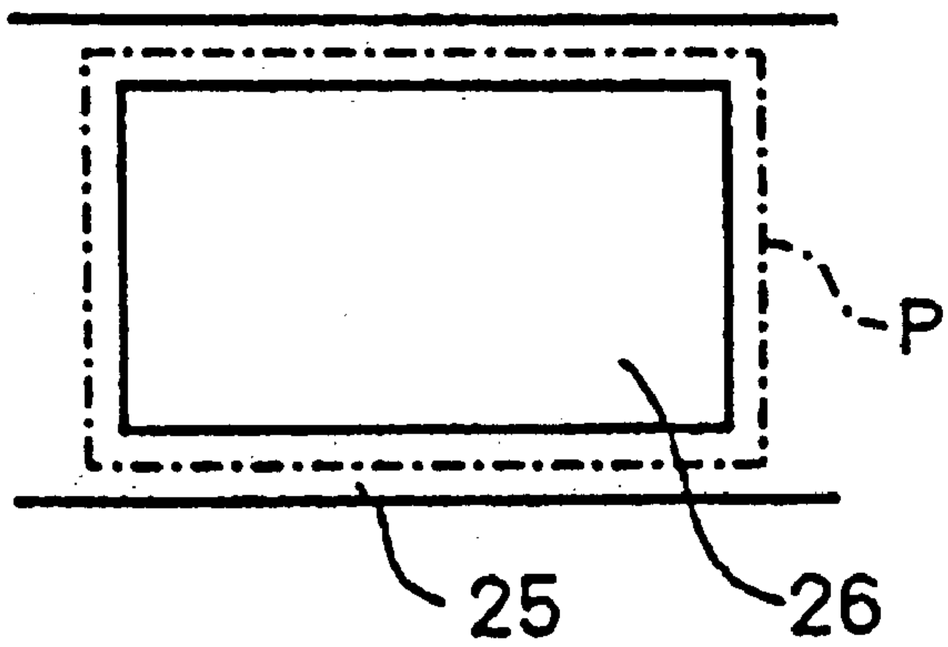

Fig.12

METHOD FOR TRANSFERRING HOT MELT INK TO A RECORDING MEDIUM

Matter enclosed in heavy brackets [ ] appears in the original patent but forms no part of this reissue specification; matter printed in italics indicates the additions made by reissue.

BACKGROUND OF THE INVENTION

1. Field of the Invention

The present invention relates to improvements of a thermal transferring printing method, and it particularly relates to a thermal transferring printing method suitable to a recording medium of which a surface has unevenness to print thereon.

2. Description of the Related Art

As is well known, a thermal transferring printing apparatus is used to print an ink pattern such as a picture or letters on a recording medium by thermally transferring hot-melt or hot-sublimable ink coated on an ink sheet to the recording medium by heating the ink sheet with a thermal head. However, it poses a problem that a recording medium having surface unevenness (rough surface) can not be employed in the apparatus because of degradation of printing quality due to an insufficient contact of the ink with the recessed portions of the unevenness of the recording medium.

As countermeasure of the insufficient contact, a hot-melt ink having high fluidity or a dot plate formed in accordance with the printing contents is employed as well as applying a large contact force with the thermal head. However, an acceptable result is not obtained yet.

In order to eliminate the above problem, there is proposed a thermal transferring printing method in "Japan Hardcopy '92", as shown in FIG. **1**.

FIG. **1** is a side view showing a general construction and an operation of a thermal transfer printer in a prior art.

Referring to FIG. **1**, after thermally transferring an ink pattern **101** onto a surface of a soft platen roller **103** from an ink sheet **100** with a thermal head **102**, the ink pattern **101** on the platen roller **103** is printed by pressing the platen roller **103** onto a surface of a recording medium **104** having an uneven surface to be printed.

In the above method, however, when using high fluidity ink, there are problems that the ink is liable to flow out from the printed ink pattern on the recording medium when the recording medium has a smooth surface in particular, and it is difficult to superpose many colors of ink on the recording medium at the same time. In addition, a printing of a picture having gradation is also difficult.

SUMMARY OF THE INVENTION

Accordingly, a general object of the present invention is to provide methods for transferring hot-melt ink to a recording medium in which the above disadvantages have been eliminated.

A specific object of the present invention is to provide a method for thermally transferring an ink pattern to a recording medium, comprising the steps of, preparing an ink sheet provided with a hot-melt and/or hot-sublimable ink layer thereon and a transparent material sheet provided with transparent hot-melt material layer thereon, thermally producing an ink pattern on the transparent hot-melt material layer of the transparent material sheet by heating the hot-melt and/or hot-sublimate ink layer with a thermal head, and thermally transferring the ink pattern produced on the transparent hot-melt material layer to the recording medium together with the transparent hot-melt material layer.

An another specific object of the present invention is to provide a method for thermally transferring hot-melt and/or hot-sublimable ink to a recording medium, comprising the steps of, preparing an ink sheet having at least a transparent hot-melt material frame layer and a hot-melt and/or hot-sublimable ink frame layer thereon, thermally transferring the transparent hot-melt material frame layer onto a surface of a platen roller, thermally producing an ink pattern on the transferred transparent hot-melt frame layer on the platen roller by heating the transparent hot-melt and/or hot-sublimable ink frame layer with a thermal head, and thermally transferring the ink pattern produced on the transparent hot-melt material layer to the recording medium together with the transparent hot-melt frame layer.

Other objects and further features of the present invention will be apparent from the following detailed description.

BRIEF DESCRIPTION OF THE DRAWINGS

FIG. **1** is a side view showing a general construction and an operation of a thermal transfer printer in a prior art.

FIG. **2** is a side view showing a general construction and an operation of a thermal transfer printer of an embodiment according to the present invention.

FIG. **3** is a plan view showing an ink sheet used in the present invention.

FIGS. **4** and **5** are enlarged sectional views showing the printing process of FIG. **2**.

FIG. **6** and FIG. **7** are side elevations respectively showing a general construction and operations of a thermal transfer printer according to the further embodiment of the present invention.

FIG. **8** is a plan view showing an ink sheet used in the further embodiment of the present invention.

FIGS. **9** through **11** are enlarged sectional views showing the printing process of FIG. **6**.

FIG. **12** is an explanatory view of the printing area.

DETAILED DESCRIPTION OF THE PREFERRED EMBODIMENT

Description will be given to an embodiment according to the present invention accompanying drawings.

FIG. **2** is a side view showing a general construction and an operation of a thermal transfer printer of an embodiment according to the present invention.

Referring to FIG. **2**, a thermal transfer printer of the present invention generally comprises a thermal head **1**, a first supply reel **2**, a first take-up reel **3**, an ink sheet **4** extendedly provided between the first supply and take-up reels **2**, **3** through a guide roller (not shown), a second supply reel **5**, a second take-up reel **6**, a transparent material sheet **8** extendedly provided between the second supply and take-up reels **5**, **6** through a guide roller **7**, a supporting stage **9** for supporting the transparent material sheet **8**, a third supply reel **12** for supplying a recording medium **10** through a guide roller **11**, a heating roller **13** provided in an opposite relation with the guide roller **11**.

FIG. **3** is a plan view showing an ink sheet used in the present invention.

As shown in FIG. **3**, the ink sheet **4** is provided with ink frame layers made of hot-melt and/or sublimable ink of at least one or more colors, for instance, yellow (Y), magenta (M) and cyan (C) at a predetermined pitch on a base sheet.

FIG. **4** and FIG. **5** are sectional views showing the printing processes of the printer shown in FIG. **2**.

The transparent material sheet **8** is made by coating a hot-melt transparent material **8**b on a base film **8**a, for instance, made of polyester resin, as shown in FIG. **4**.

For the material of the hot-melt transparent material **8**b, such material as wax, for instance, paraffin wax, microcrystalline wax or carnauba wax is used as a major component and a small amount of oil, for instance, linseed oil or mineral oil is used as an additive. In order to have hot-sublimable material, cellulose-acetate-propionate resin and polyester resin may further be added to the above listed wax based material and used as the hot-melt transparent material **8***b* as well.

Next, the description is given to the method for transferring the hot-melt ink to the recording medium **10** in above thermal transferring printing apparatus referring to FIG. **4** and FIG. **5**.

At first, the transparent material sheet **8** is placed stationary on the supporting stage **9** in such a manner that the layer of the transparent material **8**b thereof faces upward, and the ink sheet **4** is superposed on the transparent material sheet **8** in such a manner that an ink frame **4**a closely touches the transparent material **8**b. Then, both of them are pressed by the thermal head **1** being heated as they are transported from an end of the supporting stage **9** to another end thereof, so that an ink pattern **4**a is transferred to the transparent material **8**a as shown in FIG. **4**.

In order to obtain a color printing, the same operation is repeatedly performed with other color ink frames of the ink sheet **4** after taking-up the used one color ink frame of the ink sheet **4** by the first take-up reel **3** and returning the thermal head **1** to the initial position.

After a full color image is printed on the transparent material sheet **8**, the transparent material sheet **8** carrying the full color image **4**a is forwarded in the direction of arrow to the heating roller **13** by the second taking-up roller **6**, during this movement, the transparent material sheet **8** and the recording medium **10** fed out of the third supply reel **12**, are interposed together between the guide roller **11** and the heating roller **13** is heated. This causes the ink pattern **4**a (full color) together with the layer of the transparent material **8**b to contact closely with the recording medium **10** and to be heated together by the heating roller **13** so that the ink pattern **4**a together with the layer of the transparent material **8**b is thermally transferred to the recording medium **10** as shown in FIG. **5**.

As mentioned in the foregoing, after the ink pattern is transferred to the surface of the transparent material sheet **8** with the thermal head **1**, then the ink pattern is further transferred together with the layer of the transparent material **8**b to the recording medium **10** by causing the layer of the transparent material **8**b to be separated from the base film **8**a and transferred on to the recording medium **10**.

Thus, it will be understood that the printing quality according to the present invention is not affected by the unevenness of the surface of the recording medium **10**.

Further, transparent material sheet which carries the ink pattern on the layer of the transparent material **8**b, may be cut to a section of printed sheet so that such section may be used to print the carried pattern on a desired recording medium, for example, a recording medium having a predetermined configuration or a three dimensional configuration can be thermally printed by using such a cut section of printed sheet.

Next, the description is given to a further embodiment of the present invention accompanying FIGS. **6** through **11**.

FIG. **6** and FIG. **7** are side elevations respectively showing a general construction and the operation of a thermal transfer printer according to the further embodiment of the present invention.

Referring to FIG. **6** and FIG. **7**, this thermal transfer printer generally comprises a thermal head **21**, a supply reel **22**, a take-up reel **23**, an ink sheet **24** extendedly provided between the supply and take-up reels **22**, **23**, a platen roller **25** having a soft and smooth surface and equipped with a heater (not shown) therein and a press roller **27** for pressing a recording medium **26** to the platen roller **25**.

FIG. **8** is a plan view showing an ink sheet used for the further embodiment of the present invention.

As shown in FIG. **8**, the ink sheet **24** is provided with ink frame layers made of hot-melt and/or sublimable ink **24**a of at least one or more colors, for instance, yellow (Y), magenta (M) and cyan (C), and a transparent hot-melt material frame layer U at a predetermined pitch on a base sheet, where a material of the transparent hot-melt material frame layer U is printable with the sublimable ink.

The following is the description of the method for transferring the ink to the recording medium **26** in the above thermal transferring printing apparatus.

At first, the transparent material frame layer U on the ink sheet **24** is thermally transferred onto the platen roller **25** as shown in FIG. **9** by pressing the ink sheet **24** onto the platen roller **25** with the thermal head **21** as shown in FIG. **6**. Then, the ink sheet **24** is fed in an arrow direction, and an ink pattern made of hot-melt and/or sublimable ink **24**a is thermally transferred onto the transparent material frame layer U previously transferred on the platen roller **25** as shown in FIG. **10**. After that, as shown in FIG. **7**, the ink pattern together with the transparent frame U is thermally transferred onto a recording medium **26** by being closely contacted, heated and depressed to the recording medium **26** by the heater in the platen roller **25** and the press roller **27** respectively.

Thus, the ink pattern **24**a is printed on the recording medium **26** as shown in FIG. **11**.

It should be noted that the recording medium **26** comprises a base **26**b and a printing ink acceptable layer **26**a on the base **26**b for being easily printed.

Accordingly, it is possible to obtain a high printing quality for the recording medium **26** having an uneven surface without being affected by the unevenness, since the ink pattern is thermally transferred onto the transparent material frame layer U transferred preliminary on the platen roller **25**, then to the recording medium **26**, together with the transparent material frame U, i.e. not directly on the uneven surface.

As shown in FIG. **12**, since it is possible to make the printing area P of the platen roller **25** equal to the area of the recording medium **26** or more than that, it is easy to print the ink pattern on a full area of the recording medium.

Further, in the prior art, an ink pattern printed on the recording medium with the sublimable ink in the thermal printing has to be overcoated subsequently with a protective transparent layer to prevent the sublimable ink pattern from sublimating. However, it should be noted that the method of

the present invention requires no additional protective transparent layer because the layer of the transparent material **8***b* has a such function effect as a protection film.

What is claimed is:

1. A method for thermally transferring an ink pattern to a recording medium, comprising the steps of:

preparing an ink sheet provided with a hot-melt and/or hot-sublimable ink layer thereon and a transparent material sheet provided with transparent hot-melt material layer thereon;

thermally producing an ink pattern on said transparent hot-melt material layer of the transparent material sheet by heating said hot-melt and/or hot-sublimable ink layer with a thermal head; and

thermally transferring the ink pattern produced on said transparent hot-melt material layer to the recording medium together with said transparent hot-melt material layer.

2. A method for thermally transferring an ink pattern to a recording medium as defined in claim 1 wherein said step of thermally producing an ink pattern on said transparent hot-melt material layer of the transparent material sheet is further characterized in that the ink pattern so produced has a printing area larger than the area of said recording medium.

* * * * *