US00RE34412E

United States Patent [19]

Elsaesser et al.

[11] E **Patent Number: Re. 34,412**

[45] **Reissued Date of Patent: Oct. 19, 1993**

[54] **DISK STORAGE DRIVE HAVING MOTOR DRIVE WITH NON-CORRODIBLE HUB**

[75] Inventors: **Dieter Elsaesser**, St. Georgen; **Johann von der Heide**, Schramberg, both of Fed. Rep. of Germany

[73] Assignee: **Papst-Motoren GmbH & Co. KG**, St. Georgen, Fed. Rep. of Germany

[21] Appl. No.: **599,516**

[22] Filed: **Oct. 18, 1990**

Related U.S. Patent Documents

Reissue of:

[64] Patent No.: **4,779,165**
Issued: **Oct. 18, 1988**
Appl. No.: **32,954**
Filed: **Mar. 31, 1987**

U.S. Applications:

[63] Continuation of Ser. No. 733,231, May 10, 1985, abandoned, which is a continuation-in-part of Ser. No. 412,093, Aug. 27, 1982, abandoned.

[30] **Foreign Application Priority Data**

Sep. 7, 1981	[DE]	Fed. Rep. of Germany	3135385
Jun. 1, 1984	[CH]	Switzerland	2680/84
Mar. 30, 1985	[CH]	Switzerland	01374/85

[51] **Int. Cl.**[5] **G11B 17/08**; G11B 17/02; H02K 21/12

[52] **U.S. Cl.** **360/99.08**; 360/98.07; 310/156

[58] **Field of Search** 360/97.01, 97.02, 97.03, 360/98.07, 99.08; 310/156

[56] **References Cited**

U.S. PATENT DOCUMENTS

4,150,406	4/1979	Stollorz	360/97
4,275,339	6/1981	Burke et al. .	
4,438,542	3/1984	Schuh	360/97
4,992,406	5/1990	Schuh .	

FOREIGN PATENT DOCUMENTS

61-20871	6/1986	Japan .
8401863	5/1984	PCT Int'l Appl. .
1407431	8/1972	United Kingdom .
2032197	4/1980	United Kingdom .
2075240	11/1981	United Kingdom .
1604121	12/1981	United Kingdom .

Primary Examiner—A. J. Heinz
Attorney, Agent, or Firm—Finnegan, Henderson, Farabow, Garrett & Dunner

[57] **ABSTRACT**

A disk storage drive is provided with a brushless drive motor having a stator with a winding. An external rotor coaxially surrounds the stator and is spaced therefrom by a substantially cylindrical air gap. The rotor includes a permanent magnet and a soft magnetic yoke. A hub is provided that is concentric to the yoke and is connected to the rotor for rotation therewith. The hub has a disk mounting portion on its outer peripheral surface that can be passed through the central opening of a standardized storage disk for mounting the storage disks for rotation therewith. At least half of the axial longitudinal dimension of the stator winding and the rotor magnet interacting therewith is housed within the disk mounting portion of the hub. The hub is made from a non-ferromagnetic material that is suitable for storage drive clean chamber use after dimensional finishing of the hub.

69 Claims, 8 Drawing Sheets

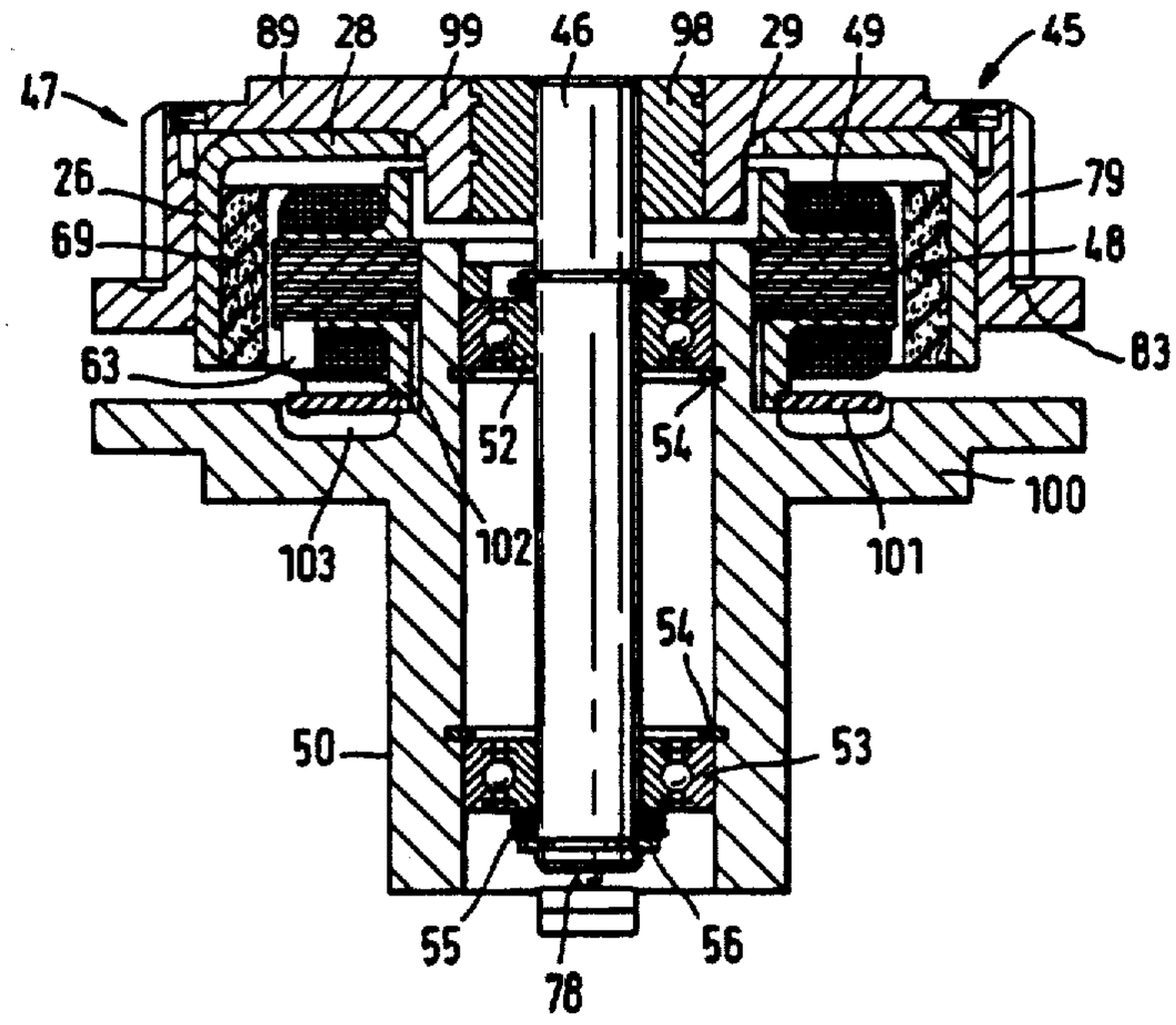

FIG. 1

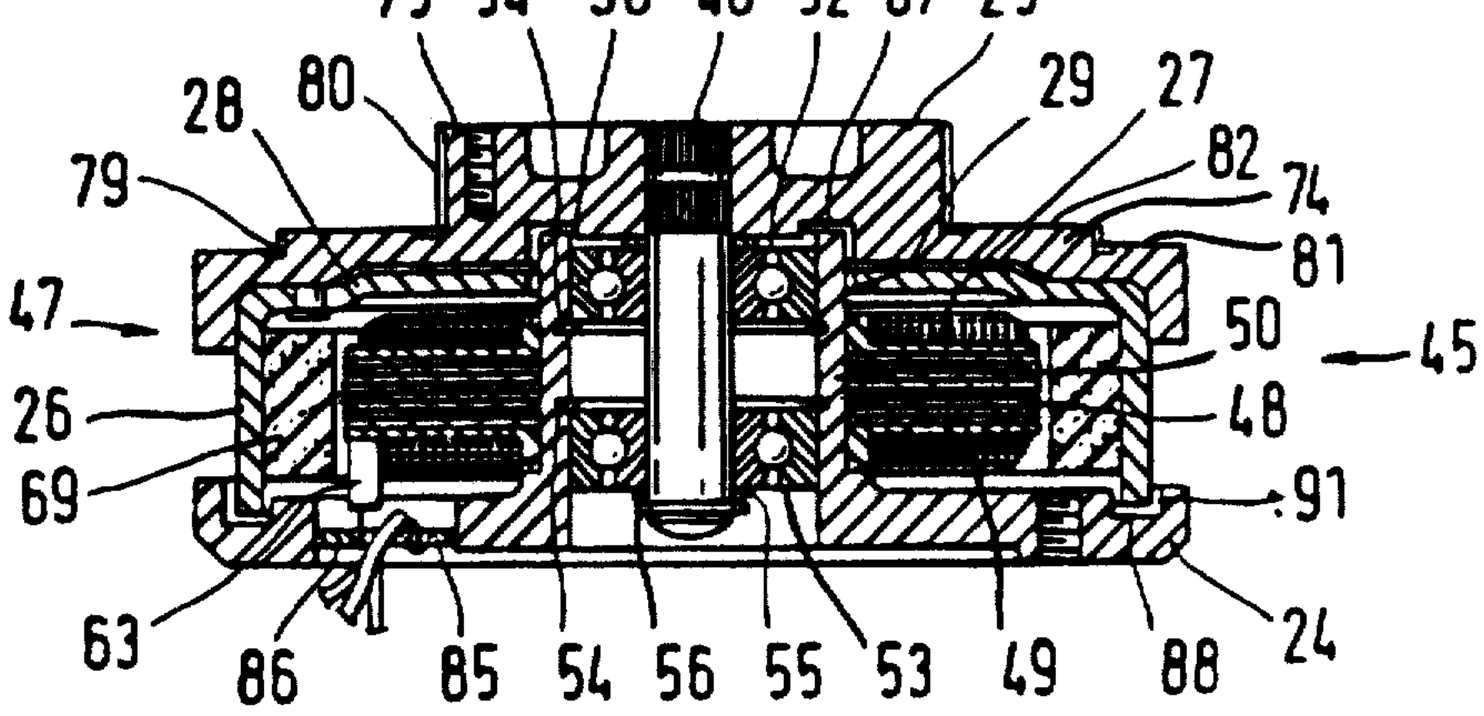
75
54
90
46
52
87
25
28
80
29
27
79
82
74
81
47
50
45
26
48
69
91
63
86
85
54
56
55
53
49
88
24

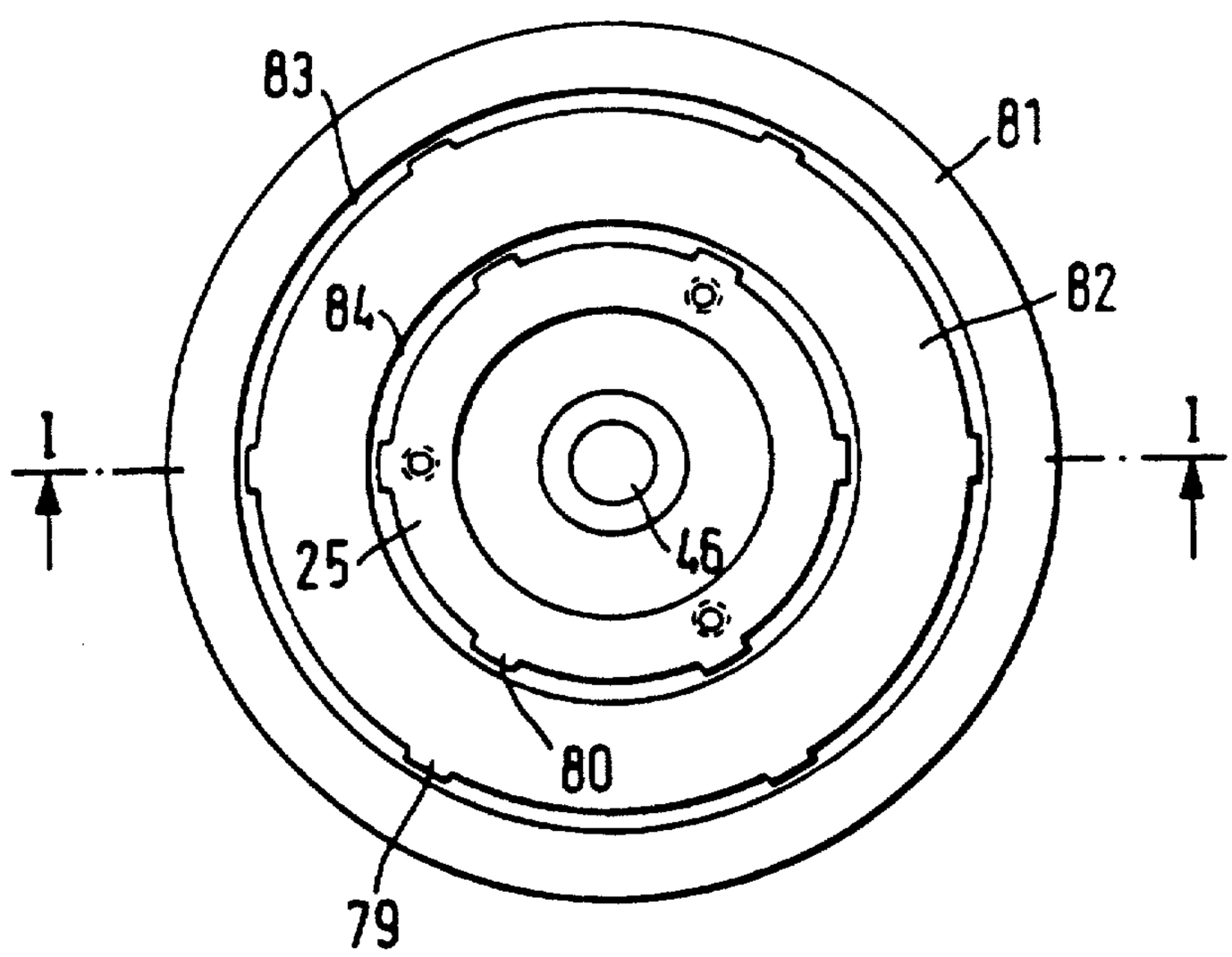
83
81
84
82
1
1
25
46
80
79

FIG. 2

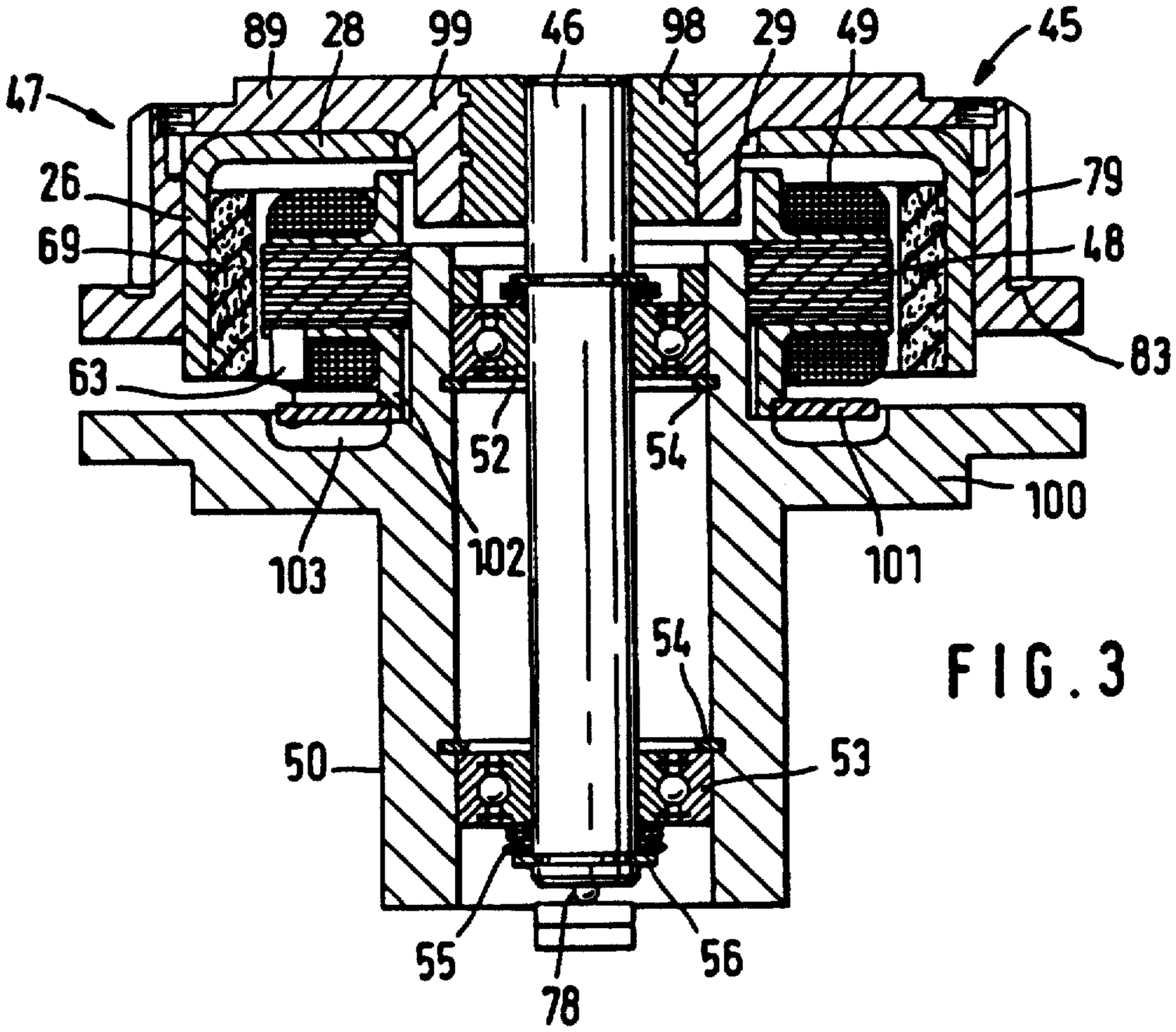
89
28
99
46
98
29
49
45
47
26
69
79
48
83
63
52
54
100
103
102
101
54
50
53
55
78
56

FIG. 3

FIG. 4

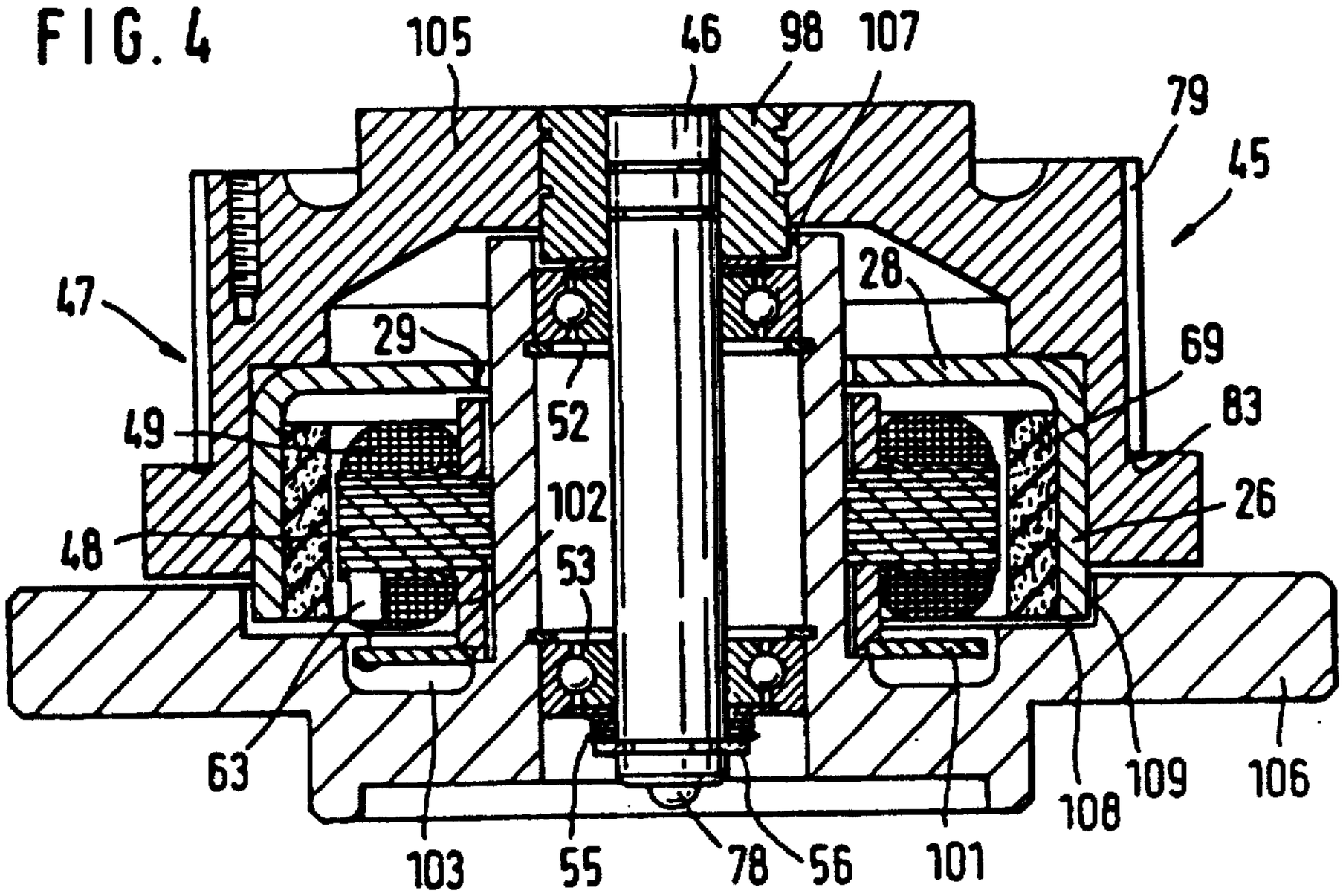
105
46
98
107
79
45
47
28
29
69
83
49
52
102
26
48
53
63
103
55
78
56
101
108
109
106

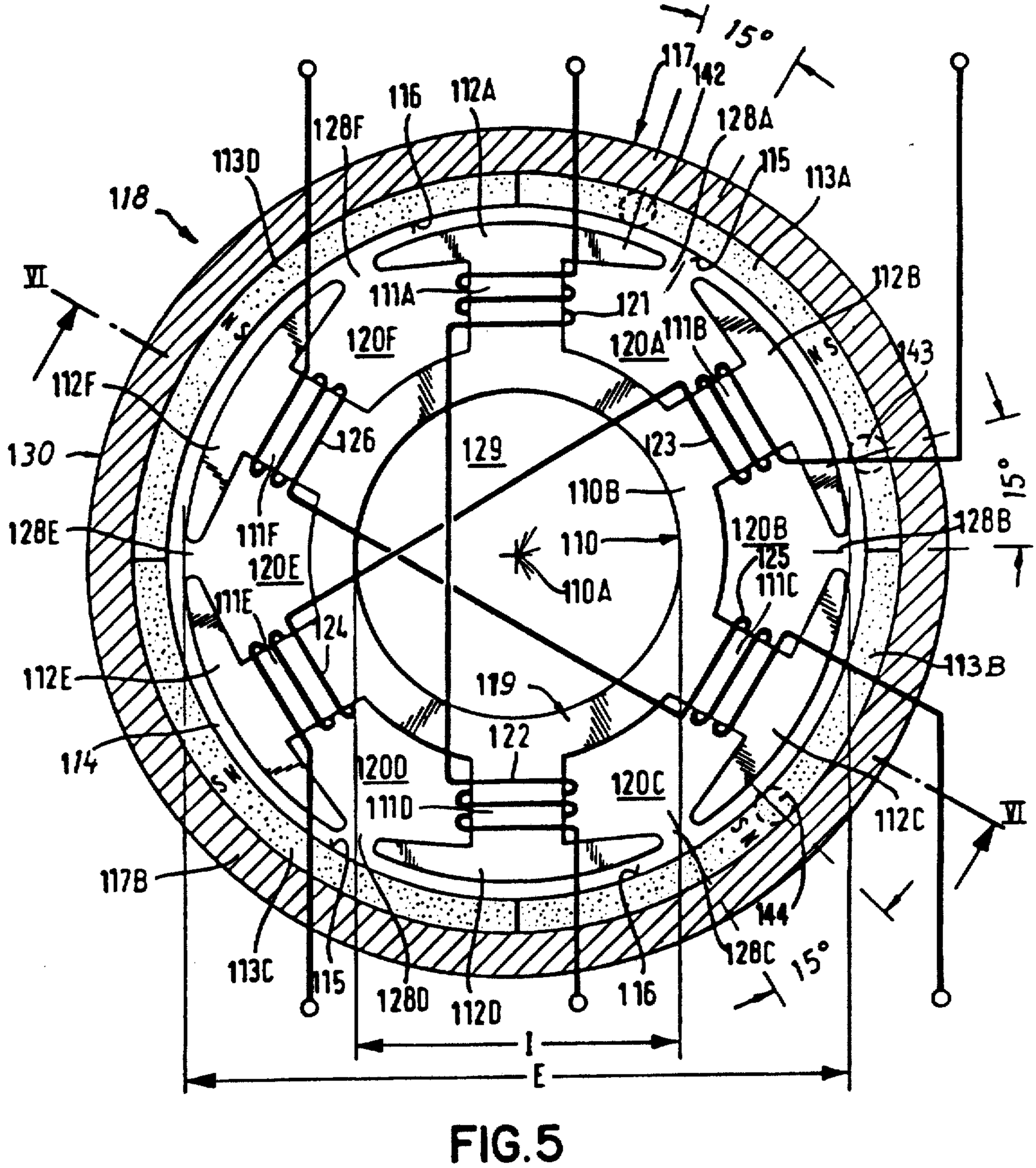
15°
117
142
116
112A
128A
128F
113D
118
115
113A
VI
112B
111A
121
120F
120A
111B
143
112F
126
129
123
130
110B
128E
111F
110
128B
120B
120E
125
111C
111E
124
110A
112E
113B
119
114
122
120D
120C
111D
112C
VI
117B
144
113C
115
128D
112D
116
128C
15°
I
E

FIG.5

FIG.6

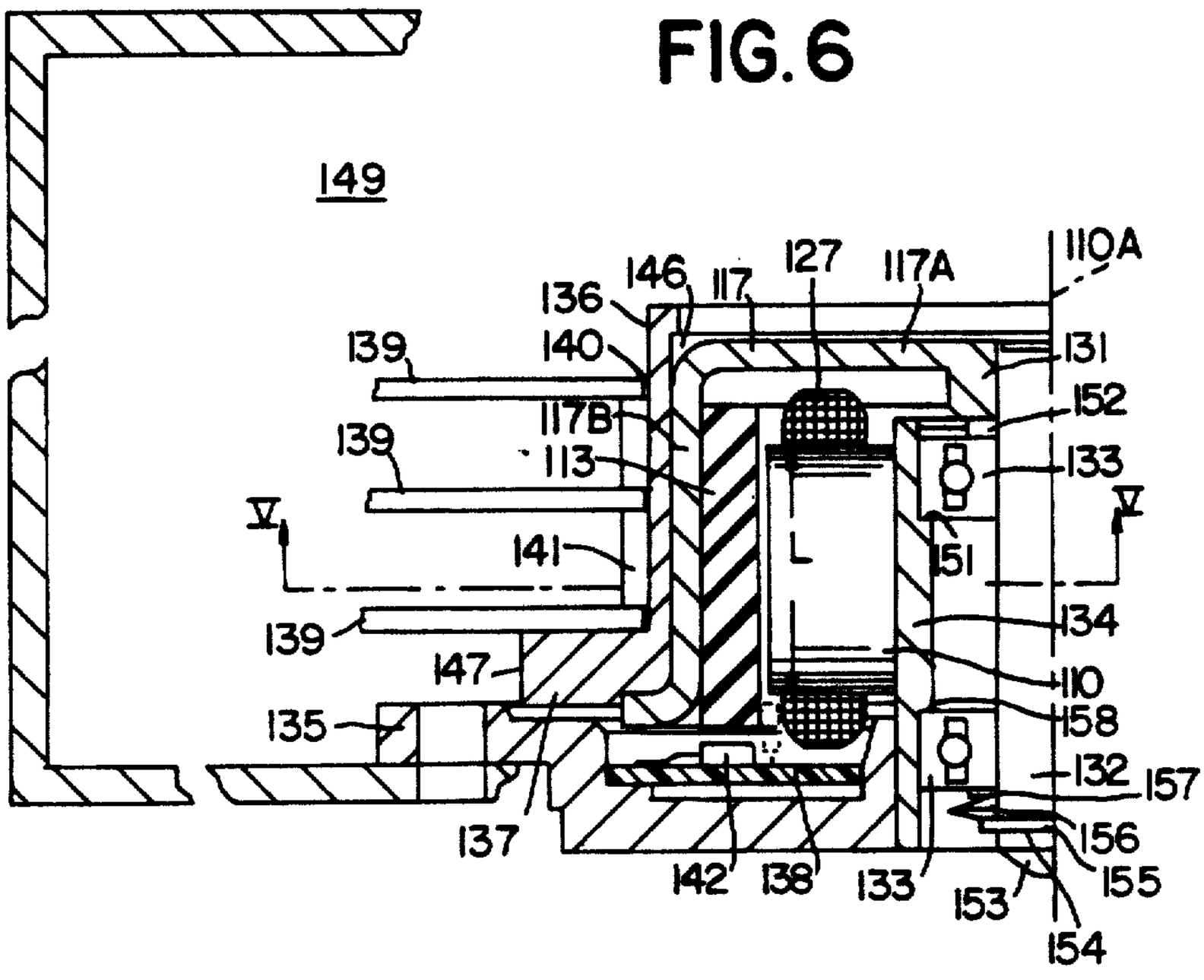
149
110A
127
117A
146
117
136
140
139
131
152
117B
113
139
133
V
V
141
L
151
139
134
147
110
135
158
132
157
156
155
137
142
138
133
153
154

FIG.7

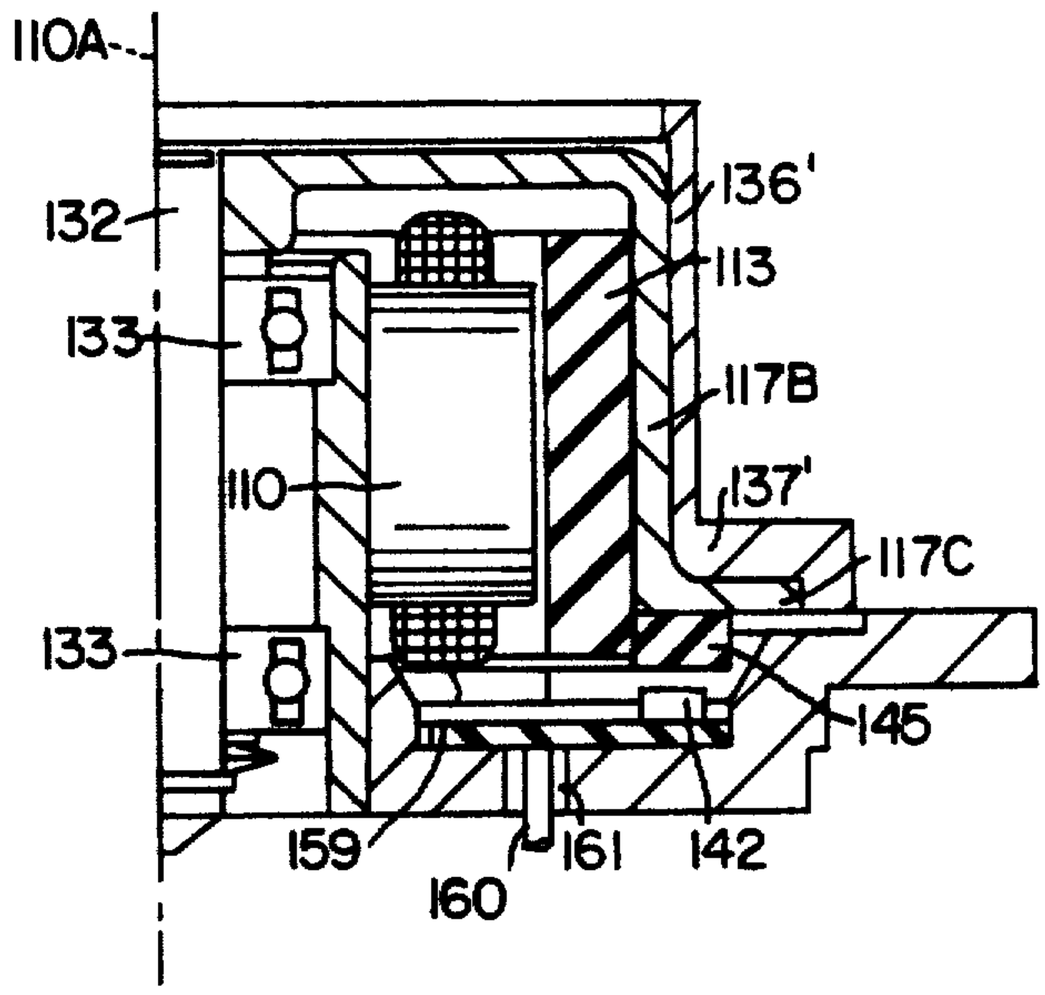
110A
136'
132
113
133
117B
110
137'
117C
133
145
159
161
142
160

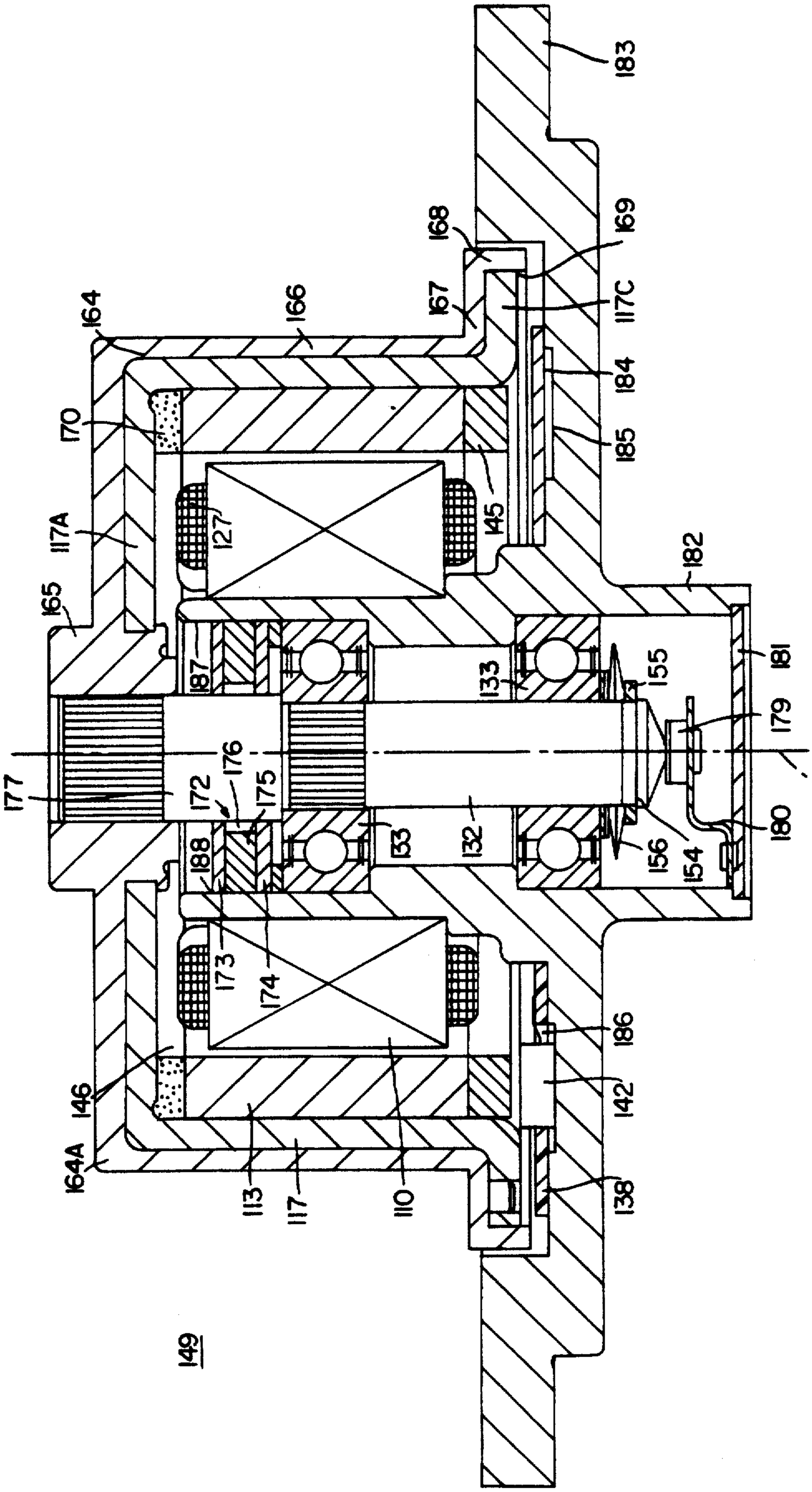
183
168
169
167
117C
164
166
184
170
185
145
117A
127
182
165
187
133
155
181
179
177
172
176
175
188
153
132
156
154
180
110A
173
174
186
146
142
164A
113
117
110
138
149

FIG. 8

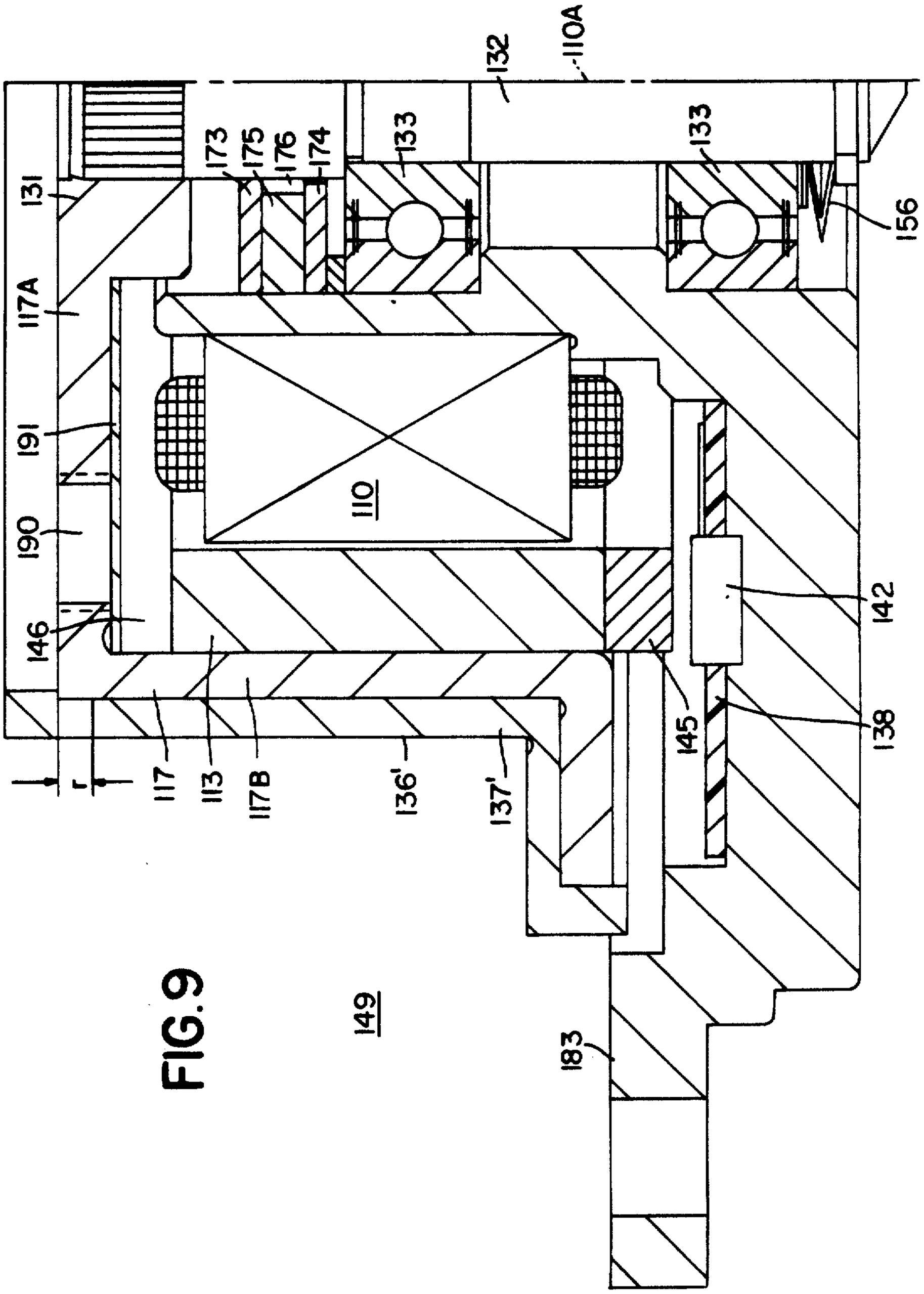
132
110A
173
175
176
174
133
133
156
131
117A
191
110
190
146
142
145
138
117
113
117B
136'
137'
r
149
183

FIG.9

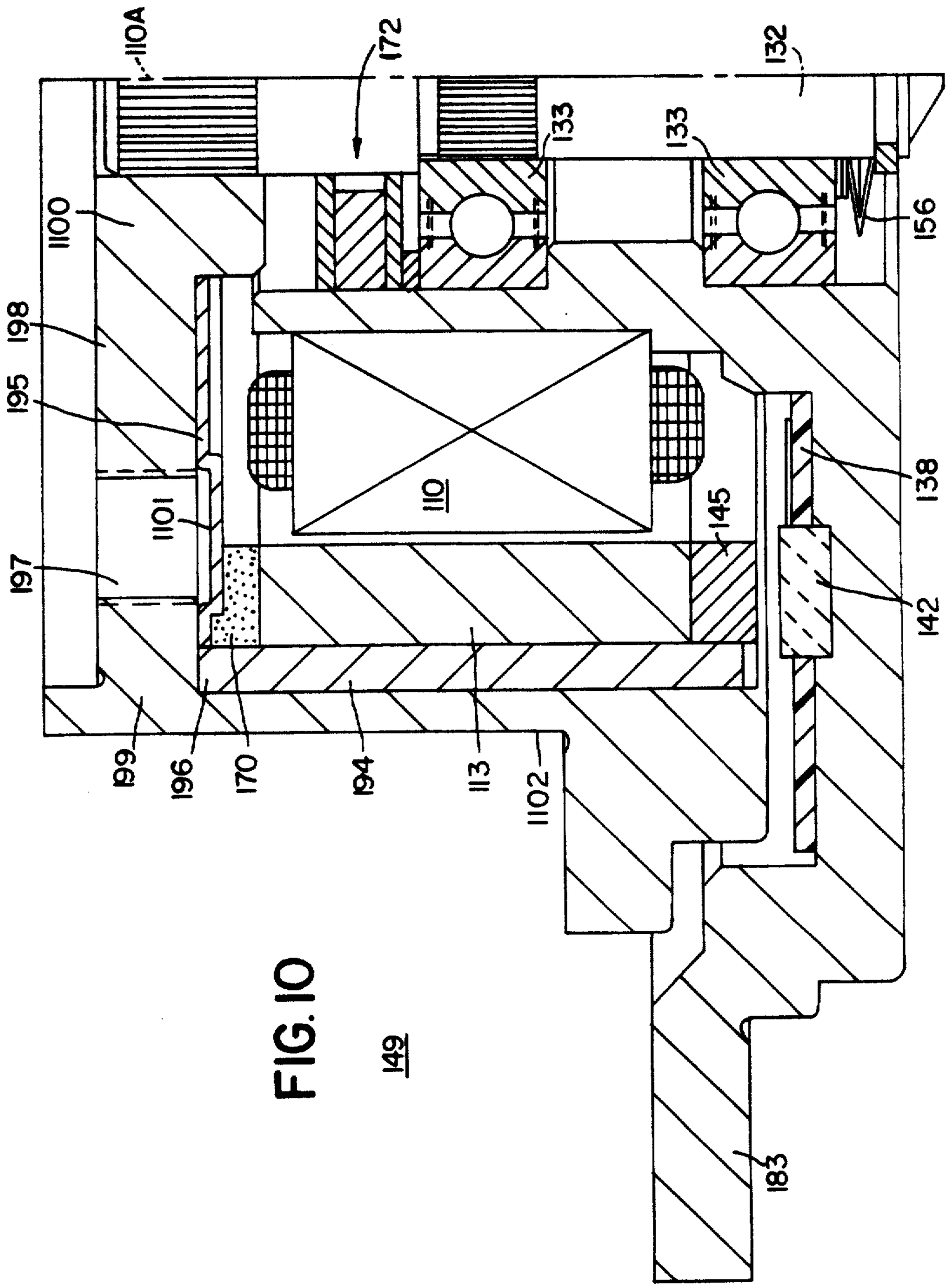
110A
172
132
133
133
156
1100
198
195
110
1101
145
138
197
142
199
196
170
194
113
1102
183

FIG. 10

149

FIG.11

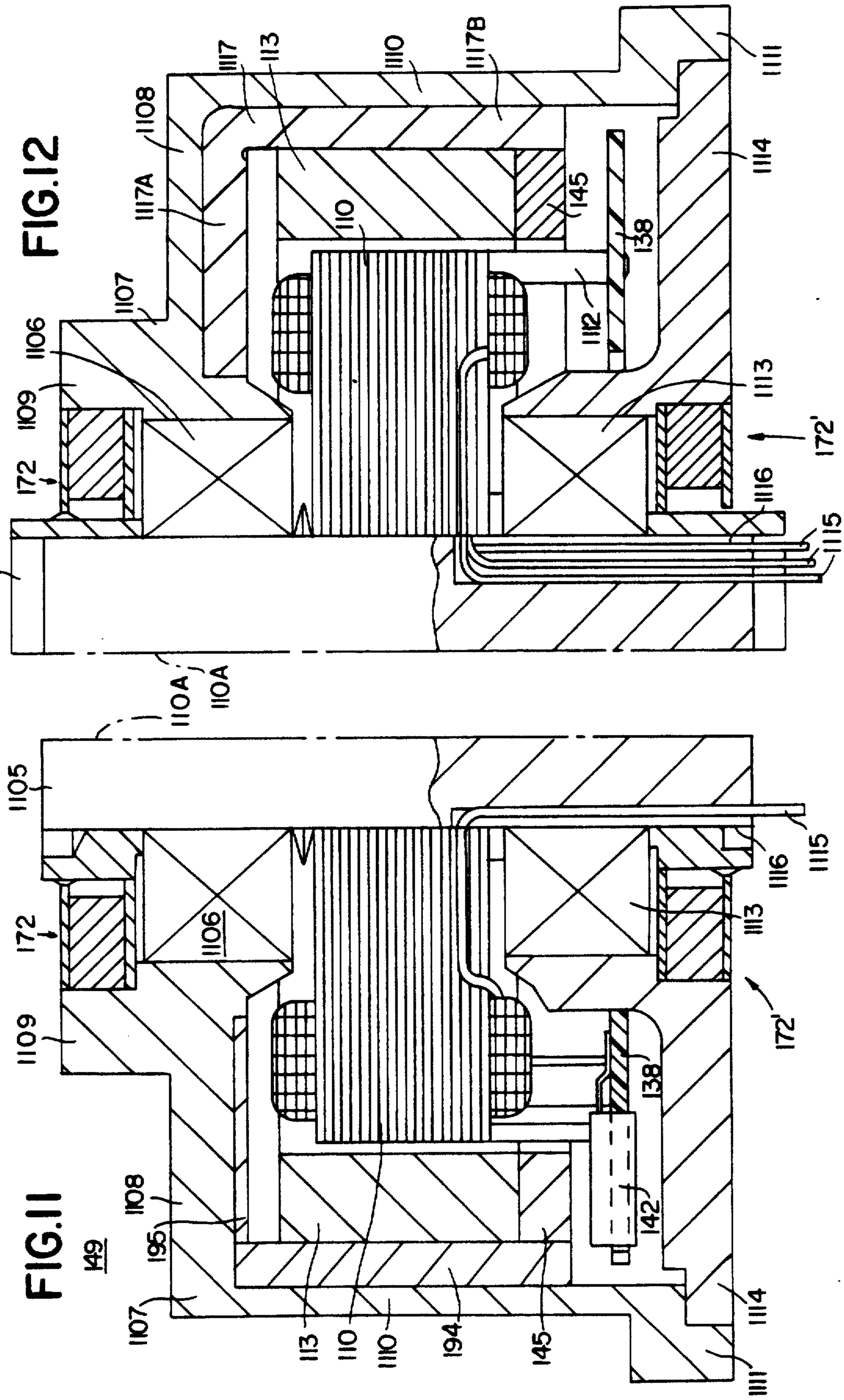
149
1108
1117A
1107
1106
1109
172
1105
110A
110
1117
113
1110
1117B
1111
1114
145
138
1112
1113
172'
1116
1115
110
110
194
145
142
1114
1111

FIG.12

1108
1117
113
1110
1117B
1111
1114
1117A
110
145
138
1107
1106
1112
1109
1113
172
172'
1116
1115
1105
110A
11
1105
1115
1116
1113
172
1106
1109
138
108
195
107
113
110
1110
194
145
142
1114
1111

DISK STORAGE DRIVE HAVING MOTOR DRIVE WITH NON-CORRODIBLE HUB

Matter enclosed in heavy brackets [ ] appears in the original patent but forms no part of this reissue specification; matter printed in italics indicates the additions made by reissue.

This application is a continuation, of application Ser. No. 733,231 filed May 10, 1985 now abandoned which is a continuation-in-part of application Ser. No. 412,093 filed Aug. 27, 1982 and now abandoned.

This is an application for reissue of U.S. Pat. No. 4,779,165, issued Oct. 18, 1988, entitled "DISK STORAGE DRIVE".

BACKGROUND OF THE INVENTION

The invention relates to a disk storage drive for receiving at least one storage tank having a central opening, with an outer rotor type driving motor having a rotor casing mounted by means of a shaft in a bearing system so as to rotate relative to a stator and on which can be placed the storage disk for driving by the rotor casing, as described in U.S. patent application Ser. No. 353,584, now U.S. Pat. No. 4,438,542, issued Mar. 27, 1984.

The content of this patent is incorporated herein by reference to avoid unnecessary repetition. It relates to a disk store and storage drive for receiving at least one storage disk having a central opening. The driving motor extends coaxially at least partly through the central opening of the storage disk, and means are provided for connecting the storage disk and the driving motor rotor.

BRIEF SUMMARY OF THE INVENTION

The problem of the present invention is to further simplify the construction of a disk store described in the aforementioned U.S. Pat. No. 4,438,542, while improving its operation. In particular, the storage disk is to be reliably protected against undesired influencing by the magnetically active parts of the driving motor. In addition, a particularly space-saving and robust construction of the driving motor are to be achieved.

According to the invention, this problem is solved in that at least the part of the rotor casing receiving the storage disk is made from a non-ferromagnetic material and carries the shaft directly or by means of a hub and in that a magnetic shield made from a ferromagnetic material in the form of a drawn can projects into the storage disk receiving part of the rotor casing and is connected thereto. The shielding surrounds the periphery of the magnetically active parts of the driving motor and also envelops the parts at one end. The shield has a central opening whose edge is directly radially adjacent the shaft or parts of the driving motor carrying or supporting the shaft. A rotor casing constructed in this way can be easily manufactured, and it effectively protects the magnetically sensitive storage disks, particularly magnetic hard storage disks, against magnetic stray flux emanating from the magnetically active parts of the driving motor. The shield is preferably in the form of a deep-drawn can, and the part of the rotor casing receiving the storage disk can be made from a lightweight metal by die casting.

If, in the manner described in the aforementioned U.S. Pat. No. 4,438,542, the driving motor is constructed as a brushless direct current motor with a permanent magnet rotor, then in accordance with a further development of the invention a printed circuit board with at least one rotary position detector and perhaps other electronic components for the control and regulation of the driving motor are mounted on the side of the stator remote from the bottom of the shielding can. This ensures that the rotary position detector and any further circuit components of the magnetic shielding arrangement do not interfere with the rotating parts.

Further advantageous development of the invention also are disclosed, including features that contribute to a compact construction of the disk storage drive. In connection with disk storage drives of the present type, high demands are made on the concentricity of the storage disks. It is therefore generally necessary to machine the storage disk receiving part or to work it in some other way so that it is dimensionally true. As a result of other features of the invention, the necessary machining is reduced to a relatively small part of the circumferential surface of the storage disk receiving part and a trouble-free engagement of a storage disk on the shoulder of the storage disk receiving part is permitted.

Other features of the claimed invention provide a robust precision mounting support for utilizing the available axial overall length for maximizing the distance between the bearings; and permit particularly large distances between the bearings where the axial installation area between a mounting or assembly flange and the end of the storage disk receiving part is limited. Installation space is available on the other side of this flange. Still other features provides for alternative solutions leading to particularly small radial runouts of the rotor; ensure a space-saving housing of the circuit board; and for solutions where importance is attached to particularly shallow construction.

BRIEF DESCRIPTION OF THE DRAWINGS

The invention is described in greater detail hereinafter relative to non-limitative embodiments and the attached drawings, wherein:

FIG. **1** is a vertical partial sectional view through a first embodiment of the invention along the line I—I of FIG. **2**;

FIG. **2** is a plan view of the arrangement of FIG. **1**;

FIG. **3** is a sectional view through another embodiment of the invention with an extended bearing tube;

FIG. **4** is a sectional view through a further embodiment of the invention; *

FIG. **5** is a section through a disk storage drive according to the invention along line V—V of FIG. **6**;

FIG. **6** is a diagrammatic section along line VI—VI of FIG. **5**;

FIG. **7** is a section similar to FIG. **6** for a modified embodiment;

FIG. **8** is an axial section through a disk storage drive according to a further modified embodiment of the invention;

FIG. **9** is an axial partial section for a further modified embodiment;

FIG. **10** is an axial partial section for an embodiment with a magnetic yoke ring and separate axial shield ring;

FIG. **11** is an axial partial section through a further modified embodiment of a disk storage drive with a fixed shaft; and

FIG. **12** is a partial section corresponding to FIG. **11** for an embodiment with a fixed shaft.

DETAILED DESCRIPTION OF THE PREFERRED EMBODIMENTS

The disk storage drive illustrated in FIG. 1, having an extremely shallow construction, has a brushless direct current motor **45** having a rotor casing **47** fixed to and coaxial with a rotor shaft **46**. A stator lamination **48**, carrying a stator winding **49** is mounted on a bearing tube **50**. The rotor shaft **46** is rotatably mounted within the bearing tube **50** by means of two bearings **52** and **53**. These are kept axially spaced by a pair of retaining rings **54**. A cup spring **55** is supported on the underside of the bearing **53** by a retaining ring **56** resting on the rotary shaft **46**, so that the bearing **52**, **53** are axially braced relative to one another. The bearings **52**, **53** are pressed into the bearing tube **50** at the time of assembly. Together with an assembly flange **24**, the bearing tube **50** forms a one-piece die casting.

The rotor casing **47** comprises a storage disk receiving part **25** and a shielding can **26**, which are joined together, for example, by riveting. The storage disk receiving part **25** is made from a non-ferromagnetic material, preferably lightweight metal. The rotor shaft **46** is pressed into a central opening of the storage disk receiving part **25**. As alternative, the shaft can be cast into the receiving part.

The shielding can **26** is made from a ferromagnetic material and can in particular be constructed as a soft iron deep-drawn part. A plurality of permanent magnetic segments or a one-part permanent magnet **69** are fixed to the inner face of shielding can **26** radially facing the stator lamination **48**. The permanent magnet **69** preferably comprises a mixture of hard ferrite, for example, barium ferrite, and an elastic material. Thus, it is a so-called rubber magnet. The latter is trapezoidally or approximately trapezoidally magnetized via the pole pitch in a motor construction having a relatively small pole clearance. At the same time, the shielding can **26** forms the magnetic return path for magnet **69**. The shielding can **26** surrounds the magnetically active parts **48**, **49**, **69** of the driving motor **45** on the periphery thereof, as well as on one end thereof. The bottom **28** of shielding can **26** is adapted to the shape of the coil winding heads **27** of the stator winding **49** and contains a central opening **29**, whose edge is in the immediate radial vicinity of the circumferential surface of the bearing tube **50**. In this way, the shielding can effectively prevents the magnetic flux from straying towards the outside of the storage disk receiving part **25**.

The storage disk receiving part **25** has two stepped stages **74** and **75**, each of whose circumferential surfaces in the present embodiment carry a plurality of radially distributed and projecting bearing webs **79** or **80**. The outsides of bearing webs **79**, **80** are ground in a dimensionally true manner to accommodate the internal diameter of the hard storage disks to be placed on the receiving part **25**. The stepped stages **74**, **75** form shoulders **81**, **82** and are provided respectively with an annular recess **83** and **84** at the foot axially of bearing webs **79**, **80**. This structure ensures that storage disks mounted on the bearings webs **79**, **80**, and having either one of two opening diameters, will cleanly engage against either the shoulder **81** or **82**.

The assembly flange **24** is provided with a recess **85** in which is housed a printed circuit board **86**. This printed circuit board carries a rotary position detector, for example a Hall IC, as well as other circuit components for the control and regulation of the driving motor **45**. The

Hall IC **63** extends up axially from the circuit board **86** to the immediate vicinity of the stator lamination **48**. The permanent magnet **69** projects axially over the stator lamination **48** in the direction of circuit board **86** until it partly overlaps the Hall IC **63**. In this way, the Hall IC **63** or, if desired, some other magnetic field-dependent semi-conductor component, determines the rotary position of the rotor of the driving motor **45**.

In the illustrated embodiment, the two bearings **52**, **53** are spaced approximately the same axial distance from the axial center of the permanent magnet **69** and the stator lamination **48**.

Disk storages are most usually operated in "clean room" environments to protect them against contaminants. By means of the assembly flange **24**, the storage drive is arranged on a partition (not shown) which separates the ultra-clean area for receiving the storage disks from the remainder of the interior of the equipment. Dirt particles, grease vapors and the like from bearing **52** and parts of the driving motor **45** are prevented from passing into the storage disk receiving area by labyrinth seals **90** and **91**. The labyrinth seal **90** is formed in that the end of the bearing tube **50** away from the assembly flange **24** that projects into an annular slot **87** on the inside of the storage disk receiving part **25**, accompanied by the formation of sealing gaps. Similarly, for forming the labyrinth seal **91**, the end of the shield can **26** projects into the annular slot **88** of the assembly flange **24**. The labyrinth seals **90**, **91** are preferably dimensioned in the manner described in the aforementioned U.S. Pat. No. 4,438,542.

The embodiment of FIG. **3** differs from the arrangement according to FIGS. **1** and **2** in that storage disks having the same opening diameters are placed on bearing webs **79** of a storage disk receiving part **89**, which surrounds the majority of the axial dimension of the magnetic shielding can **26**. In other words, the magnetically active parts **48**, **49**, **69** of the driving motor **45** are partially located within the central opening of the storage disk. A bush-like hub **98** is pressed or cast into the storage disk receiving part **89**. The rotor shaft **46** is then pressed into the hub **98**. The edge of the central opening **29** in the bottom **28** of the shielding can **26** extends up to the portion **99** of the receiving part **89** which received the hub **98**.

The bearing tube **50** projects in the axial direction on the side of the assembly flange **100** remote from the stator lamination **48**. As a result, a particularly large axial spacing between the two bearings **52**, **53** can be achieved. Axially, bearing **52** is in the vicinity of the axial center of the permanent magnet **69** and of the stator lamination **48**. The axial spacing between bearing **52** and **53** is equal to or larger than double the bearing external diameter. To prevent electrical charging of the rotor which in operation rotates at high speed and which would disturb the operational reliability of the disk storage device, the rotor shaft **46** is electrically conductively connected to the equipment chassis by means of a bearing ball **78** and a spring contact (not shown). The printed circuit board **101**, carrying the rotary position detector **63** and the other electronic components, is supported on the end of a spacer ring **102** facing an assembly flange **100** and is located between the flange and the stator lamination **48**. An annular slot **103** is formed in assembly flange **100** and is aligned with the annular circuit board **101**. The annular slot **103** provides space for receiving the wire ends and

soldered connections projecting from the underside of the circuit board **101**.

FIG. **4** shows an embodiment in which a storage disk receiving part **105** is axially extended in order to be able to house a larger number of storage disks than in the arrangement of FIG. **3**. The bearing tube **50** is correspondingly axially extended in order to be able to use the existing installation space with a view to a maximum axial spacing between the bearings **52** and **53**. The end of the bearing tube **50**, remote from as assembly flange **106**, embraces the hub **98** connecting the receiving part **105** and the shaft **46**, accompanied by the formation of a labyrinth seal **107**. The edge of the central opening **29** of shielding can **26** extends up close to the outside of the bearing tube **50**. The free end of the shielding can **26** engages a recess **108** in the assembly flange **106**. As a result, a further labyrinth seal **109** is formed. This embodiment otherwise corresponds to the structures described hereinbefore.

In a further development of the invention where a disk storage drive utilizes a brushless D.C. drive motor having a stator provided with a winding and an external rotor coaxially surrounding the stator and spaced therefrom by a substantially cylindrical air gap, the rotor includes a permanent magnetic rotor magnet and a soft magnetic yoke. The motor further includes a hub concentric to the yoke and connected to the rotor for rotation therewith. The hub has a disk mounting or support portion, which extends through the central opening of the storage disk and receives at least one storage disk in a clean area space or chamber of a storage drive.

In known disk storage drives of this type there is a hub or armature sleeve for receiving the storage disk or disks wherein the disk mounting portion extends over a small part of the axial dimension of the magnetically active stator and rotor parts, i.e. the stator winding and the rotor magnet that interacts therewith.

In disk storage units, there is an increasing need for reducing the space requirement for the storage unit. Thus, another problem of the invention is to provide a disk storage drive that takes up particularly little space and consequently allows a minimization of the disk storage dimensions.

According to a further aspect of the invention, this problem is solved by the stator winding and the rotor magnet interacting therewith, at least with respect to half their axial dimension, being housed within the area surrounded by the disk mounting portion of the hub. The magnetically active parts of the drive motor in this construction are located mostly within the space which is already required for holding the storage disks, particularly magnetic rigid storage disks, but also storage disks of other types, e.g. optical storage disks.

Preferably, the stator winding and the motor magnet interacting therewith are contained within the space surrounded by the disk mounting portion of the hub by up to ⅔ of their axial dimension. A particularly space-saving overall arrangement is obtained if the magnetically active stator and rotor parts are located substantially completely within this space.

The diameter of the central opening of the storage disks, e.g. magnetic rigid storage disks, is standardized and consequently its size is predetermined by industry and the market to a fixed value. However, the application of the drive energy requires a certain motor size. The conditions are particularly critical in known small storage disks with a central opening diameter of, for example, only 25 mm. In order to provide maximum space for the magnetically active motor parts in the diametrically limited area of the storage disk central opening, according to even a further development of the invention, the wall thickness of the disk mounting portion of the hub is minimized consistent with needed mechanical strength. The wall thickness of the disk mounting portion is approximately the same as and preferably smaller than the wall thickness of the part of the magnetic yoke which is concentric thereto.

The disk mounting portion preferably has a cylindrical outer peripheral surface, that is, a peripheral surface free from bearing webs or ribs in providing a maximum cross section while taking into account the fixed diameter of the central opening of the storage disks consistent with the necessary mechanical strength of the hub.

At least those surface parts of the hub located in the clean area or chamber of the drive must not give off, even during prolonged use of the disk storage drive, significant quantity of dirt particles, for example, from oxidation. Preferably, the hub is made from a material which, even after cutting, is suitable for use in a clean area or chamber, that is, a material which after being cut, and without a corrosion-inhibiting treatment following the cutting, meets the strict cleanness conditions necessary with disk storage drives in the clean chamber of the drives receiving the storage disks. Such a construction makes it possible to finish, for example, by grinding or otherwise stripping the outer peripheral surface of the disk support portion after assembly of the hub and the drive motor with respect to the centricity with the rotation axis. Such metal finishing of the installed hub is frequently necessary in order to fulfil the extreme demands in connection with disk storage drives with respect to accuracy of rotation or minimization of untrueness of the hub. It is particularly appropriate to have a hub made from light metal, preferably aluminum or an aluminum alloy. Light metal hubs can be used in clean chambers without further treatment, even after cutting has taken place. For example, by using a diamond tool, and while respecting the necessary precision, such hubs can be stripped in a less expensive way than by grinding, particularly the disk mounting portion with a cylindrical outer circumferential surface. The hub is preferably impact extruded or cast and is pressed hot on the magnetic yoke. In principle, other possibilities for joining hub and yoke exist, such as a bonding together of the two parts.

The magnetic yoke can have a cup or pot-shaped construction as is known. It is more advantageous, however, to provide an annular magnetic yoke and approximately insert a magnetic shield ring in the hub extending radially inwardly substantially from the clean chamber axial end of the annular magnetic yoke. As a result, necessary guidance of the magnetic flux and efficient magnetic shielding of the storage disks with respect to the drive motor are achieved. The combination of yoke ring and shield ring can be produced less expensively than a cup or pot. The shield ring can be relatively thin so that the overall axial size of the drive can be further reduced, or, for a constant axial size, provide more space for a hub end wall at the closed end of the subassembly comprising the hub, magnetic yoke and motor magnet. The magnetic yoke can be appropriately constructed as a rolled ring, particularly a steel ring, or as a portion of a tube.

The rotor and the hub can be fixed to a shaft which is supported in a bearing system at least partly housed within the drive motor stator. A bearing bush receiving

the shaft can be shaped on to the yoke, if the yoke is constructed in cup-shaped manner, or preferably on to the hub. This obviates a separate component of the bush. The rotor and the hub can, according to a modified construction, be mounted to rotate together via a bearing system of a fixed shaft, the leads of the stator winding passing through the fixed shaft to the outside of the drive.

A control magnet, for example, in the form of a control magnet ring, is preferably connected to the unit that includes the rotor and the hub, the magnet interacting with a stationary magnetic field-sensitive rotation position sensor whose function is to produce commutating control signals and optionally additional control signals, such as a pulse for a given rotor reference position. The control magnet is appropriately located on the axially open side of the unit that includes the rotor and hub. It can be axially aligned with the rotor magnet. The rotor magnet can optionally serve as the control magnet. The rotation position sensor is advantageously placed on a printed circuit board axially facing the axially open side of the unit comprising the rotor and hub.

In FIGS. **5** and **6**, the drive motor **118** has a stator **119** with a stator lamination bundle **110**. The bundle **110** is radially symmetrical with respect to a central rotation axis **110A** and is provided with an annular central portion **110B**. The stator laminations **110** form six stator poles **111A** to **111F**, each of which, in the plan view according to FIG. **5**, has a substantially T-shaped configuration. The stator poles are positioned with a reciprocal angular distance of 60°. A sintered iron core can be provided in place of a bundle of laminations. Pole shoes **112A** to **112F** of the stator poles together with a permanent magnetic motor magnet **113** define a substantially cylindrical air gap **114**. In the manner indicated in FIG. **5**, motor magnet **113** is radially magnetized in quadripolar manner in the circumferential direction, that is, it has four portions **113A** to **113D** and on the inside of the annular motor magnet **113** facing the air gap **114** are provided in alternating sequence two magnetic north poles and two magnetic south poles **115**, **116**. In the illustrated embodiment, each of the poles **115** and **116** have a width of substantially 180° el, (corresponding to 90° mechanical). Thus, an approximately rectangular or trapezoidal magnetization is obtained in the circumferential direction of the air gap **114**.

The motor magnet **113** is fitted in a soft magnetic material external rotor cup or pot **117** serving as a magnetic yoke and has a magnetic shield bonded thereinto. The cup **117** and the magnet **113** together form an external rotor **130**. The external rotor cup **117** has an end wall **117A** (FIG. **6**) and a cylindrical circumferential wall **117B**. The motor magnet **113** can be a rubber magnet, or a plastic-bonded magnet. In place of a one-part magnet ring, dish-shaped magnet segments can be bonded or in some other way fixed into the cup **117**. Particularly suitable materials for the magnet ring or segments are magnetic material in a synthetic binder, a mixture of hard ferrite and elastomeric material, ceramic magnetic material or samarium cobalt. While in the represented embodiment each of the poles extends over substantially 180° el, it is also possible to work with narrower poles. The rotor pole width, however, should be at least 120° el to obtain a high motor output.

Together the stator poles **111A** to **111F** define six stator slots **120A** to **120F**, in which is placed a three-strand stator winding. Each of the three strands includes two 120° el-cored coils **121,122**; **123,124**; and **125,126**. Each is wound around one of the stator poles **111A** to **111F**. The two coils in series of each strand diametrically face one another, as shown in FIG. **5**. The coils are preferably wound in bifilar manner (not shown). As can be gathered from the diagrammatic representation of FIG. **5**, any overlap between coils **121** to **126** is avoided and in this way particularly short coil winding heads **127** (FIG. **6**) are obtained. The slot openings **128A** to **128F** can be between 3° el and 30° el. In the present stator winding configuration, slots **120A** to **120F** can be excellently filled. There is generally no need to provide caps for the slot openings **128A** to **128F**.

The present motor design makes it possible to obtain a relatively large hole **129** within the stator, because the depth of the stator slots **120A** to **120F** can be kept relatively small. It is easy to obtain ratios between the diameter I of internal hole **129** and the stator external diameter E of the pole shoes **112** of at least 0.35. Preferably, the I/E value is in the range 0.4 to 0.7. The L/E ratio between the axial length L (FIG. **6**) of the stator iron and the stator external diameter E is preferably equal to or smaller than 1. These dimensioning ratios are of particular significance in connection with a stable mounting of the rotor. This is of particular importance in connection with drives for disk storage systems. In addition, the overall resistance of the stator winding is kept particularly small.

For the purpose of the mounting of the rotor **130**, according to FIG. **6** in the center of the external rotor cup **117** is fixed a stub shaft **132** via a bearing bush **131** shaped on to the cup, the shaft being supported via axially spaced ball bearings **133** in a cylindrical sleeve **134**, which also carries the stator laminations **110** and is fixed to an assembly flange **135**.

A preferably light metal hub **137** (FIG. **6**) for a rigid disk is provided with a cylindrical disk mounting portion **136** and is placed, for example, by shrinking onto the external rotor cup **117**. One or more rigid storage disks **139**, preferably magnetic disks, are placed on the disk mounting portion **136**. The disk mounting portion extends through a central opening **140** in the storage disks **139**, which are reciprocally axially spaced by spacers **141** and are fixed with respect to the hub **137** by a known clamping device. In the embodiment shown in FIG. **6**, somewhat more than § of the axial dimension of the magnetically active stator and rotor parts of drive motor **118**, that is, the motor magnet **113** and the stator windings **121** to **126** project into a space or volume **146** surrounded by the disk mounting portion **136**. The wall thickness of the disk mounting portion **136** of the hub **37** is smaller than the wall thickness of the cylindrical circumferential wall **117B** of the cup **117** that forms the magnetic yoke, so that a maximum cross section is made available for the rotor parts **113**, **117**, **119** in the predetermined central opening **140**. In particular, the wall thickness of the disk support portion **136** is made as small as possible consistent with mechanical strength requirements. To increase the dimensional stability of the hub **137**, near the open end of the unit that includes the hub **137**, the external rotor cup **117** and the motor magnet **113**, the hub carries a thickened, outwardly radially projecting flange **147**, which simultaneously axially supports the rigid storage disk **139** closest to the flange.

The hub **137**, together with the storage disks **139** supported thereon, is located in a clean chamber **149**, defined by the disk storage casing parts. The assembly

flange **135** forms part of the clean chamber boundary towards the lower side in FIG. **6**. The upper bearing **113** in FIG. **6** is located between a shoulder **151** on the sleeve **134** and a spacing ring **152**, whose side remote from the bearing **133** engages the bottom surface of the bearing bush **131**. The stub shaft **132** is convex at its lower end **153** and is approximately mounted in an axial bearing (not shown). Close to the lower end **153**, a fastening ring **155** is arranged in an annular slot **154** of the shaft **132**. Against the upper surface of the ring bear two cup springs **156**, which engage on an intermediate ring **157**. The lower ball bearing **153** is positioned between the intermediate ring **157** and a further shoulder **158** of the sleeve **134**.

The assembly flange **135** carries a circuit board **138**, which can optionally carry the commutating electronics and/or other circuit components, such as for speed regulation. The circuit board **130** more particularly carries three rotation position sensors **142**, **143**, **144**. In the illustrated embodiment, they are magnetic field sensors, such as Hall generators, field plates, magnetic diodes and the like. Bistable-switching Hall IC's are particularly advantageous. The use of 180° el wide rotor poles **115**, **116** makes it possible to use the motor magnet **113** as the control magnet of the position sensors **142**, **143**, **144**. The embodiment according to FIG. **6** shows the rotation position sensors **142**, **143**, **144** (of which only sensor **142** is seen) axially facing the magnet **113** controlling them. It is also possible to arrange the rotation position sensors in the manner indicated in broken line form in FIG. **6** to radially face the magnet **113** controlling them. The rotation position sensors **142**, **143**, **144** are appropriately so peripherally positioned with respect to the coils **121** to **126** that changes to the sensor switching states substantially coincide with the zero crossings of the associated coil voltages. In the embodiment according to FIG. **5** this is achieved in that the rotation position sensors are displaced by 15° mechanical with respect to the center of the slot openings **128A**, **128B**, **128C**.

The embodiment according to FIG. **7** essentially differs from that according to FIG. **6** in that a control magnet **145** separate from the motor magnet **113** is provided for energizing the rotation position sensors **142**, **143**, **144**. The control magnet **145** is located radially outside the motor magnet **113** on the bottom of a flange **117C**, which projects radially outwardly from the peripheral wall **117B** of the external rotor cup **117**, on its open end. The external rotor cup **117** and the hub **137'** terminate in a flush manner at the open end in the embodiment of FIG. **7**. At **159** is indicated a connection of one of the coils **121**, **126** to a contact of the printed circuit board **138** which extends outwardly through an opening **161** in the assembly flange **135**, a connecting cable **160**.

FIG. **8** illustrates another embodiment of the disk storage drive in which, differing from the embodiment of FIGS. **6** and **7**, a hub **164** corresponding to the hub **137** has an end wall **164A** engaging the end wall **117B** of the external rotor cup **117**. A bearing bush **165** for the shaft **132** is formed integrally in the end wall **164A**. On the end of the disk support portion **166** of the hub **164** remote from the end wall **164A** is located a radially outwardly bent flange **167**, which passes into a circumferential wall **168** concentric to, but having a larger diameter than, the disk mounting portion **166**. The circumferential wall **168** engages radially and externally over the flange **117C** of the cup **117**. The junction between the flange **117C** and the circumferential wall **168** is sealed in the manner indicated at **169** by varnish, adhesive or the like. Thus, as in FIG. **7**, it is ensured that dirt particles are not passed radially outwardly from the flange **117C** and into the clean chamber **149**. The control magnet **145** interacting with the rotation position sensors (of which only sensor **142** is shown in FIG. **8**) is axially aligned with the motor magnet **113** and is fitted to the side of the magnet **113** remote from the end wall **117A**. The external rotor cup **117** is drawn down to such an extent in FIG. **8** that it surrounds the control magnet **145**. The space left free between the end wall **117A** and the end of the magnet **113** facing the wall is filled with an adhesive or some other filling material **170**. The bearing system for the shaft **132** formed by the two ball bearings **133** is sealed with respect to the inner area of the motor and consequently with respect to the clean chamber **149** by means of a magnetic fluid seal **172**, which comprises two annular pole pieces **173**, **174**, a permanent magnet ring **175** located between these pole pieces and a magnetic fluid (not shown), which fluid is introduced into an annular clearance **176** between the magnetic ring **175** and a portion **177** of the shaft **132**. Seals of this type are known as "ferro-fluidic seals". The seal **172** effectively prevents the passage of dust particles from the bearing system into the clean chamber **149**. The seal **172** is adjacent to, but axially spaced from, the bearing bush **165**, which ensures that magnetic fluid is not drawn by capillary action out of the seal **172**.

As can be gathered from FIG. **8**, the magnetically active stator and rotor parts are substantially completely housed within the space enclosed by the disk support portion **166**. FIG. **8** also shows an axial bearing **179** for the shaft **132**. The bearing **179** is located on a spring clip **180**, which is in turn placed on a cover **181** introduced into the end of a sleeve **182** remote from the clean chamber **49**. Similarly to the sleeve **134** of the embodiment according to FIGS. **6** and **7**, the sleeve **182** receives the bearings **133**, but is connected in one piece with the assembly flange **183** corresponding to the assembly flange **135**.

Similarly to the spring clip **180**, the axial bearing **179** is preferably electrically conducting. This makes possible the elimination of electrostatic charges of the shaft **132** via the bearing **179** in the spring clip **180**.

The circuit board **138** is connected to the assembly flange **183** via an adhesive coating **184**, which is located in a slot **185** of the assembly flange **183**. To further reduce the overall axial height of the disk storage drive, the circuit board **138** is provided with openings **186** in the vicinity of the rotation position sensors, and the rotation position sensors are introduced into the slot **185** and the openings **186**. Near the engagement point between the upper pole piece **173** and the inner circumferential wall **187** of the sleeve **182**, an additional seal by means of coating lacquer or the like is provided at **188**.

The embodiment according to FIG. **9** is similar to that of FIG. **8**. The bearing bush **131**, however, is formed integrally in the end wall **117A** of the external rotor cup **117**, which acts as a magnetic shield. The end wall **117A** contains three threaded holes **190**, which are circumferentially displaced from one another by 120°. The holes **190** are used for fitting the earlier mentioned but not shown clamping device for the rigid storage disks **139** (FIG. **6**). Under the end wall **117A** is located a cover ring **191** which seals the inner area of the motor relative to the clean chamber **149** near the threaded

holes **190**. Most of the axial length of the magnetically active stator and rotor parts of the drive motor are once again located in the area **146**, which is surrounded by the disk support portion **136'** of the hub **137'** similar to that shown in FIG. **7**.

FIG. **10** shows a further modified embodiment of the invention, which essentially differs from the previous constructions of FIGS. **5–9** in that the external rotor cup **117** is replaced by a soft magnetic yoke ring **194** and a separate soft magnetic shield ring **195**. The shield ring **195** extends from the clean chamber-side axial end **196** of the yoke ring **194** in a radially inwardly direction. The wall thickness of the shield ring **195** can be much less than that of the yoke ring **194**. Threaded holes **197** functionally corresponding to the threaded holes **190** of FIG. **9** are formed in the end wall **198** of a hub **199**, in which integrally is formed the bearing bush **1100** for the shaft **132**. Near the threaded holes **197**, a shield ring **195** is provided with depressions **1101**, which depressions permit the use of the full thread length of the threaded holes **197**. Filling material **170** is provided in the space between the upper end of the motor magnet **113** in FIG. **10**, the end **196** of the yoke **194** and the radially outer part of the shield ring **195**. The magnetically active rotor and stator parts are more than § located in the area surrounded by the cylindrical disk support portion **1102** of the hub **199**.

The yoke ring **194** can be a rolled ring, particularly a steel ring, or a portion of a tube. Manufacture is simplified compared with the use of an external rotor cup **117**. In addition, additional axial length is saved, because on the one hand the wall thickness of the shield ring **195** can be kept small, and because on the other hand no space is lost, considering the way in which some space is required when using the cup **117** with its radius r (FIG. **9**) at the transition point between its circumferential wall **117B** and its end wall **117A**. The axial construction space which thus has been made available can be used to give the end wall **198** a greater thickness and consequently increase the length of the threaded holes **197**.

Whereas in the case of the embodiment according to FIGS. **5** to **10**, the shaft **132** rotates in operation, FIGS. **11** and **12** illustrate embodiments with a stationary shaft **1105**. According to FIG. **11**, the shaft **1105** is fitted into the disk storage device. By means of a first ball bearing **1106**, a hub **1107** is mounted to rotate on the shaft **1106**. The hub **1107** has an end wall **1108** with a formed-in bearing bush **1109**, a disk support portion **1110** and, on the side remote from end wall **1108**, a radially outwardly projecting reinforcing flange **1111**. The hub **1107** is connected to a soft magnetic yoke ring **194**. The soft magnetic shield ring **195** engages the inside of the end wall **1108**. The circuit board **138** with the rotation position sensors, of which only the sensor **142** is shown in FIG. **11**, is suspended by means of supports **1112** (FIG. **12**) on the stator laminations **110**. A motor cover **1114** is mounted by means of a second ball bearing **1113** on the shaft **1105**, the cover tightly sealing the motor on the axial end remote from the end wall **1108**. A magnetic fluid or ferrofluidic seal **172** or **172'** discussed in detail relative to FIG. **8**, is provided on each of the outside of the bearings **1106**, **1113**. The seals **172**, **172'** ensure a sealing of the bearing system with respect to the clean chamber **149**, so that the complete drive motor can be located in the clean chamber. The connections of the stator winding and/or the electronic components mounted on the circuit board **138** can be led out by means of a cable **1115**, which is placed in an axial slot **1116** of the shaft **1105**.

The embodiment of FIG. **12** differs from that of FIG. **11** substantially in that in place of the shield ring **195** and the yoke ring **194** there is a one-piece soft magnetic material cup **1117** with an end wall **1117A** and a circumferential wall **1117B** corresponding to the cup **117**.

In the embodiments according to FIGS. **11** and **12**, the magnetically active stator and rotor parts of the drive motor are located within the area surrounded by the disk mounting portion **1110**.

It should be apparent that certain constructional features are interchangeable in all the illustrated embodiments.

What is claimed is:

1. A disk storage drive comprising:

a clean chamber for housing a storage disk;

a brushless drive motor having a stator and a winding on the stator, the stator having an axial longitudinal dimension and the winding having a pair of opposed end surfaces;

an external rotor having a rotation axis and coaxially surrounding the stator, an inner wall of said rotor being spaced from said stator by a substantially cyclindrical air gap, said rotor having a permanent magnet with an axial longitudinal dimension and a soft magnetic yoke with an axially extending wall portion and a radially extending wall portion, said permanent magnet forming the inner wall of said rotor adjacent the air gap;

a hub held fast on the rotor for rotation therewith and being coaxial to the yoke, said hub having a machinable outer surface and being made of a non-ferromagnetic, non-corrodible material suitable for use in a clean chamber following machining of the outer surface;

an outer peripheral cylindrical surface on said hub dimensioned to pass through a standardized central opening of a storage disk for receiving and mounting the storage disk for rotation therewith in said clean chamber, said outer peripheral cylindrical surface radially enclosing said soft magnetic yoke of said rotor and said stator for a substantial part of the axial extensions thereof, and at least half of the axial longitudinal dimension of the stator winding and of the rotor magnet interacting magnetically therewith being housed within said outer peripheral cylindrical surface of the storage disk mounting portion of the hub, and

said yoke radial wall portion extending radially inwardly from one axial end of the yoke axial wall portion by a distance sufficient to extend over the adjacent one of said pair of winding end surfaces.

2. A disk storage drive as claimed in claim **1**, wherein at least two-thirds of said axial longitudinal dimension of the stator winding and of the rotor magnet interacting magnetically therewith is housed within the disk mounting portion of the hub.

3. A disk storage drive as claimed in claim **2**, wherein the stator winding and the rotor magnet interacting therewith are substantially completely housed within the disk mounting portion of the hub.

4. A disk storage drive as claimed in claim **1**, wherein the wall of the disk mounting portion is no thicker than the wall of the part of the magnetic yoke coaxial therewith.

5. A disk storage drive as claimed in claim 4, wherein the disk support mounting wall is thinner than said yoke wall.

6. A disk storage drive as claimed in claim 1, wherein the hub is made from light metal.

7. A disk storage drive as claimed in claim 1, wherein the external circumferential surface of the disk mounting portion of the hub, after assembly of hub and drive motor, is finished with respect to centricity with the rotation axis.

8. A disk storage drive as claimed in claim 7, wherein said surface is ground or turned to finish.

9. A disk storage drive as claimed in claim 1, wherein the hub is extruded or cast.

10. A disk storage drive as claimed in claim 1, wherein the hub is pressed hot on the magnetic yoke.

11. A disk storage drive as claimed in claim 1, wherein the magnetic yoke is annular.

12. A disk storage drive as claimed in claim 11, wherein a magnetic shield ring is placed in the hub and extends from the inside wall of the hub radially inwardly and substantially from one axial end of the annular yoke.

13. A disk storage drive as claimed in claim 1, wherein the rotor and the hub are fixed to a shaft rotatably supported axially in a bearing system that is at least partly housed within the stator of the drive motor.

14. A disk storage drive as claimed in claim 13, wherein a bearing bush receiving the shaft is formed integrally in the hub or the magnetic yoke.

15. A disk storage drive as claimed in claim 14, wherein the bearing system is sealed by means of at least one magnetic fluid or ferro-fluidic seal.

16. A disk storage drive as claimed in claim 15, wherein the magnetic fluid or ferro-fluidic seal is positioned adjacent to but axially spaced from the bearing bush.

17. A disk storage drive as claimed in claim 1, wherein the rotor and the hub are rotatably mounted by means of a bearing system on a fixed shaft.

18. A disk storage drive as claimed in claim 17, wherein leads are provided for the stator winding that pass through the fixed shaft to the outside of the drive.

19. A disk storage drive as claimed in claim 1, wherein a control magnet is connected to the unit that includes the rotor and hub, and interacts with a stationary, magnetic field-sensitive rotation position sensor.

20. A disk storage drive as claimed in claim 19, wherein the control magnet is positioned on that side of the unit that includes the rotor and hub and that is open in the axial direction.

21. A disk storage drive as claimed in claim 19, wherein the control magnet is axially aligned with the rotor magnet.

22. A disk storage drive as claimed in claim 19, wherein the rotation position sensor is mounted on a printed circuit board that axially faces the side of the unit that includes the rotor and hub and that is open in the axial direction.

23. A disk storage drive as claimed in claim 1, wherein the ratio of inner and outer diameters of the stator is at least 0.35.

24. A disk storage drive as claimed in claim 23, wherein said ratio is 0.4 to 0.7.

25. A disk storage drive as claimed in claim 1, wherein the ratio of axial length to external diameter of the stator does not exceed 1.

26. A disk storage drive comprising:

a clean chamber for housing a storage disk;

a brushless drive motor having a stator and a winding on the stator, the stator having an axial longitudinal dimension;

an external rotor having a rotation axis and coaxially surrounding the stator, an inner wall of said rotor being spaced from said stator by a substantially cylindrical air gap, said rotor having a permanent magnet with an axial longitudinal dimension and a soft magnetic annular yoke with an axially extending wall portion, said permanent magnet forming the inner wall of said rotor adjacent the air gap;

a hub held fast on the rotor for rotation therewith and being coaxial to the yoke, said hub having a machinable outer surface and being made of a non-ferromagnetic, non-corrodible material suitable for use in a clean chamber following machining of the outer surface;

an outer peripheral cylindrical surface on said hub dimensioned to pass through a standardied central opening of a storage disk for receiving and mounting the storage disk for rotation therewith in said clean chamber, said outer peripheral cylindrical surface radially enclosing said soft magnetic yoke of said rotor and said stator for a substantial part of the axial extensions thereof, and at least half of the axial longitudinal dimension of the stator winding and of the rotor magnet interacting magnetically there with being housed within said outer peripheral cylindrical surface of the storage disk mounting portion of the hub; and

a magnetic shield ring located in the hub and extending from the inside wall of the hub radially inwardly and substantially from one axial end of the annular yoke.

27. A disk storage drive comprising:

a clean chamber for housing a storage disk;

a brushless drive motor having a stator and a winding on the stator, the stator having an axial longitudinal dimension;

an external rotor having a rotation axis and coaxially surrounding the stator, an inner wall of said rotor being spaced from said stator by a substantially cylindrical air gap, said rotor having a permanent magnet with an axial longitudinal dimension and a soft magnetic annular yoke with an axially extending wall portion, said permanent magnet forming the inner wall of said rotor adjacent the air gap;

a hub held fast on the rotor for rotation therewith and being coaxial to the yoke, said hub having a machinable outer surface and being made of a non-ferromagnetic, non-corrodible material suitable for use in a clean chamber following machining of the outer surface;

an outer peripheral cylindrical surface on said hub dimensioned to pass through a standardized central opening of a storage disk for receiving and mounting the storage disk for rotation therewith in said clean chamber, said outer peripheral cylindrical surface radially enclosing said soft magnetic annular yoke of said rotor and said stator for a substantial part of the axial extensions thereof, and at least half of the axial longitudinal dimension of the stator winding and of the rotor magnet interacting magnetically therewith being housed within said outer peripheral cylindrical surface of the storage disk mounting portion of the hub, and

a magnetic shield ring located in the hub and extending substantially from the soft magnetic annular yoke radially inwardly and substantially from one axial end of the soft magnetic annular yoke.

28. A disk storage drive as claimed in claim 27, wherein the stator winding and the rotor magnet interacting therewith are substantially completely housed within the disk mounting portion of the hub.

29. A disk storage drive as claimed in claim 27, wherein the wall of the disk mounting portion is no thicker than the wall of the part of the soft magnetic annular yoke coaxial therewith.

30. A disk storage drive as claimed in claim 29, wherein the disk support mounting wall is thinner than the wall of the soft magnetic annular yoke.

31. A disk storage drive as claimed in claim 27, wherein the hub is made from light metal.

32. A disk storage drive as claimed in claim 27, wherein the external circumferential surface of the disk mounting portion of the hub, after assembly of hub and drive motor, is finished with respect to centricity with the rotation axis.

33. A disk storage drive as claimed in claim 32, wherein said surface is ground or turned to finish.

34. A disk storage drive as claimed in claim 27, wherein the hub is extruded or cast.

35. A disk storage drive as claimed in claim 27, wherein the hub is pressed hot on the soft magnetic annular yoke.

36. A disk storage drive as claimed in claim 27, wherein the rotor and the hub are fixed to a rotatable shaft.

37. A disk storage drive as claimed in claim 27, wherein the rotor and the hub are fixed to a shaft rotatably supported axially in a bearing system that is at least partly housed within the stator of the drive motor.

38. A disk storage drive as claimed in claim 27, wherein a bearing bush receiving the shaft is formed integrally in the hub or soft magnetic annular yoke.

39. A disk storage drive as claimed in claim 38, wherein the bearing system is sealed by means of at least one magnetic fluid or ferrofluidic seal.

40. A disk storage drive as claimed in claim 39, wherein the magnetic fluid or ferrofluidic seal is positioned adjacent to but axially spaced from the bearing bush.

41. A disk storage drive as claimed in claim 27, wherein the rotor and the hub are rotatably mounted by means of a bearing system on a fixed shaft.

42. A disk storage drive as claimed in claim 41, wherein leads are provided for the stator winding that pass through the fixed shaft to the outside of the drive.

43. A disk storage drive as claimed in claim 27, wherein a control magnet is connected to the unit that includes the rotor and the hub, and interacts with a stationary magnetic position sensor.

44. A disk storage drive as claimed in claim 43, wherein the control magnet is positioned on that side of the unit that includes the rotor and the hub and that is open in the axial direction.

45. A disk storage drive as claimed in claim 43, wherein the control magnet is axially aligned with the rotor magnet.

46. A disk storage drive as claimed in claim 43, wherein the rotation position sensor is mounted on a printed circuit board that axially faces the side of the unit that includes the rotor and the hub and that is open in the axial direction.

47. A disk storage drive as claimed in claim 27, wherein the ratio of inner and outer diameters of the stator is at least 0.35.

48. A disk storage drive as claimed in claim 47, wherein said ratio is 0.4 to 0.7.

49. A disk storage drive as claimed in claim 27, wherein the ratio of axial length to external diameter of the stator does not exceed 1.

50. A disk storage drive comprising:

a clean chamber for housing a storage disk;

a brushless drive motor having a stator and a winding on the stator, the stator having an axial longitudinal dimension;

an external rotor having a rotation axis and coaxially surrounding the stator, the rotor being fixed to a shaft rotatably supported axially in a bearing system that is at least partly housed within the stator, an inner wall of said rotor being spaced from said stator by a substantially cylindrical air gap, said rotor having a permanent magnet with an axial longitudinal dimension and a soft magnetic annular yoke with an axially extending wall portion, said permanent magnet forming the inner wall of said rotor adjacent the air gap;

a hub held fast on the rotor for rotation therewith and being coaxial to the yoke, said hub having a machinable outer surface and being made of a non-ferromagnetic, non-corrodible material suitable for use in a clean chamber following machining of the outer surface;

an outer peripheral cylindrical surface on said hub dimensioned to pass through a standardized central opening of a storage disk for receiving and mounting the storage disk for rotation therewith in said clean chamber, said outer peripheral cylindrical surface radially enclosing said soft magnetic annular yoke of said rotor and said stator for a substantial part of the axial extensions thereof, and at least half of the axial longitudinal dimension of the stator winding and of the rotor magnet interacting magnetically therewith being housed within said outer peripheral cylindrical surface of the storage disk mounting portion of the hub, and

a magnetic shield ring located in the hub and extending substantially from the soft magnetic annular yoke radially inwardly and substantially from one axial end of the soft magnetic annular yoke.

51. A disk storage drive comprising:

a clean chamber for housing a storage disk;

a brushless drive motor having a stator and a winding on the stator, the stator having an axial longitudinal dimension;

an external rotor having a rotation axis and coaxially surrounding the stator, the rotor being rotatably mounted by means of a bearing system on a fixed shaft, an inner wall of said rotor being spaced from said stator by a substantially cylindrical air gap, said rotor having a permanent magnet with an axial longitudinal dimension and a soft magnetic annular yoke with an axially extending wall portion, said permanent magnet forming the inner wall of said rotor adjacent the air gap;

a hub held fast on the rotor for rotation therewith and being coaxial to the yoke, said hub having a machinable outer surface and being made of a non-ferromagnetic, non-corrodible material suitable for use in a clean chamber following machining of the outer surface;

an outer peripheral cylindrical surface on said hub dimensioned to pass through a standardized central opening of a storage disk for receiving and mounting the storage disk for rotation therewith in said clean chamber, said outer peripheral cylindrical surface radially enclosing said soft magnetic annular yoke of

said rotor and said stator for a substantial part of the axial extensions thereof, and at least half of the axial longitudinal dimension of the stator winding and of the rotor magnet interacting magnetically therewith being housed within said outer peripheral cylindrical surface of the storage disk mounting portion of the hub, and

a magnetic shield ring located in the hub and extending substantially from the soft magnetic annular yoke radially inwardly and substantially from one axial end of the soft magnetic annular yoke.

52. A disk storage drive comprising:

a clean chamber for housing a storage disk;

a brushless drive motor having a stator and a winding on the stator, the stator having an axial longitudinal dimension;

an external rotor having a rotation axis and coaxially surrounding the stator, an inner wall of said rotor being spaced from said stator by a substantially cylindrical air gap, said rotor having a permanent magnet with an axial longitudinal dimension and a soft-magnetic annular yoke with an axially extending wall portion, said permanent magnet forming the inner wall of said rotor adjacent the air gap;

a hub held fast on the rotor for rotation therewith and being coaxial to the yoke, said hub having a machinable outer surface and being made of a non-corrodible material suitable for use in a clean chamber;

an outer peripheral cylindrical surface on said hub dimensioned to pass through a standarized central opening of a storage disk for receiving and mounting the storage disk for rotation therewith in said clean chamber, said outer peripheral cylindrical surface radially enclosing said soft magnetic annular yoke of said rotor and said stator for a substantial part of the axial extensions thereof; and

a magnetic shield ring located in the hub and extending substantially from one axial end of the soft magnetic annular yoke.

53. A disk storage drive as claimed in claim 52, wherein the stator winding and the rotor magnet interacting therewith are substantially completely housed within the disk mounting portion of the hub.

54. A disk storage drive as claimed in claim 52, wherein the hub is made of light metal.

55. A disk storage drive as claimed in claim 52, wherein the external circumferential surface of the disk mounting portion of the hub, after assembly of hub and drive motor, is finished with respect to centricity with the rotation axis.

56. A disk storage drive as claimed in claim 52, wherein the rotor and the hub are fixed to a rotatable shaft.

57. A disk storage drive as claimed in claim 52, wherein the rotor and the hub are fixed to a shaft rotatably supported axially in a bearing system that is at least partly housed within the stator of the drive motor.

58. A disk storage drive as claimed in claim 52, wherein a bearing bush receiving the shaft is formed integrally in the hub or soft magnetic annular yoke.

59. A disk storage drive as claimed in claim 58, wherein the bearing system is sealed by means of at least one magnetic fluid or ferrofluidic seal.

60. A disk storage drive as claimed in claim 59, wherein the magnetic field or ferrofluidic seal is positioned adjacent to but axially spaced from the bearing bush.

61. A disk storage drive as claimed in claim 52, wherein the rotor and the hub are rotatably mounted by means of a bearing system on a fixed shaft.

62. A disk storage drive as claimed in claim 61, wherein leads are provided for the stator winding that pass through the fixed shaft to the outside of the drive.

63. A disk storage drive as claimed in claim 52, wherein a control magnet is connected to the unit that includes the rotor and the hub, and interacts with a stationary magnetic position sensor.

64. A disk storage drive as claimed in claim 63, wherein the control magnet is positioned on that side of the unit that includes the rotor and the hub and that is open in the axial direction.

65. A disk storage drive as claimed in claim 63, wherein the control magnet is axially aligned with the rotor magnet.

66. A disk storage drive as claimed in claim 63, wherein the rotation position sensor is mounted on a printed circuit board that axially faces the side of the unit that includes the rotor and the hub and that is open in the axial direction.

67. A disk storage drive as claimed in claim 52, wherein the ratio of inner and outer diameters of the stator is at least 0.35.

68. A disk storage drive as claimed in claim 67, wherein said ratio is 0.4 to 0.7.

69. A disk storage drive as claimed in claim 52, wherein the ratio of axial length to external diameter of the stator does not exceed 1.

* * * * *

UNITED STATES PATENT AND TRADEMARK OFFICE

CERTIFICATE OF CORRECTION

PATENT NO. : Re. 34,412
DATED : October 19, 1993
INVENTOR(S) : Dieter ELSAESSER et al.

It is certified that error appears in the above-indentified patent and that said Letters Patent is hereby corrected as shown below:

Claim 38, column 15, line 34, change "27" to -- 37 --.

Claim 58, column 18, line 9, change "52" to -- 57 --.

Signed and Sealed this

Seventeenth Day of December, 1996

Attest:

BRUCE LEHMAN

Attesting Officer

Commissioner of Patents and Trademarks