US00D987886S

(12) United States Design Patent

Wang et al.

(10) Patent No.: US D987,886 S
(45) Date of Patent: ** May 30, 2023

(54) **LIGHTING FIXTURE ACCESSORY**

(71) Applicants: **Chung-Peng Wang**, Taichung (TW); **Shan-Hui Huang**, Taichung (TW)

(72) Inventors: **Chung-Peng Wang**, Taichung (TW); **Shan-Hui Huang**, Taichung (TW)

(**) Term: **15 Years**

(21) Appl. No.: **29/775,777**

(22) Filed: **Mar. 25, 2021**

(51) **LOC (14) Cl.** **26-05**

(52) **U.S. Cl.**
USPC **D26/138**

(58) **Field of Classification Search**
USPC D26/76–92, 113, 118, 120, 138, 142
CPC F21S 8/06; F21S 8/061; F21S 8/063; F21S 8/068; F21V 5/007; F21V 5/005
See application file for complete search history.

(56) **References Cited**

U.S. PATENT DOCUMENTS

D629,553	S	*	12/2010	Gielen	D26/76
D629,554	S	*	12/2010	Gielen	D26/80
D639,485	S	*	6/2011	Wauters	D26/83
D643,964	S	*	8/2011	Heyrman	D26/85
D731,700	S	*	6/2015	Santoro	D26/118
D740,479	S	*	10/2015	Beno	D26/90
D747,539	S	*	1/2016	Santoro	D26/120
D850,707	S	*	6/2019	Tremaine	D26/138
D878,657	S	*	3/2020	Carini	D26/76
D976,466	S	*	1/2023	Hsu	D6/323

OTHER PUBLICATIONS

Binari 08 48 DIMM, available in architonic.com, announced Year 2019 [online], [site visited Oct. 25, 2022], Internet URL: https://www.architonic.com/en/product/aqlus-binari-08-48-dimm/20237089 (Year: 2019).*

The Micro Running Magnet Surface Profile, available in professional.flos.com, announced Year 2020 [online], [site visited Oct. 25, 2022], Internet URL: https://professional.flos.com/en/global/product/the-micro-running-magnet-surface-profile-06.6010.14/ (Year: 2020).*

(Continued)

Primary Examiner — Jennifer L Rempfer
Assistant Examiner — Jasmine L. Comedy
(74) *Attorney, Agent, or Firm* — Michael Best & Friedrich LLP

(57) **CLAIM**

The ornamental design for a lighting fixture accessory, as shown and described.

DESCRIPTION

FIG. **1** is a front, right-side, and top perspective view of a lighting fixture accessory showing our new design;
FIG. **2** is a front, right-side, and bottom perspective view thereof;
FIG. **3** is a front elevational view thereof;
FIG. **4** is a rear elevational view thereof;
FIG. **5** is a left side elevational view thereof;
FIG. **6** is a right side elevational view thereof;
FIG. **7** is a top plan view thereof;
FIG. **8** is a bottom plan view thereof; and,
FIG. **9** is a cutaway view thereof taken in the front, right-side, and bottom direction with parts thereof cut off at line **9-9** of FIG. **7**.
The design is shown with a symbolic break in its length. The appearance of any portion between the break lines forms no part of the claimed design.
The evenly dashed broken lines depict portions of the lighting fixture accessory in which the design is embodied that form no part of the claimed design.
The dot-dot-dash broken lines represent unclaimed boundaries of the design.

1 Claim, 9 Drawing Sheets

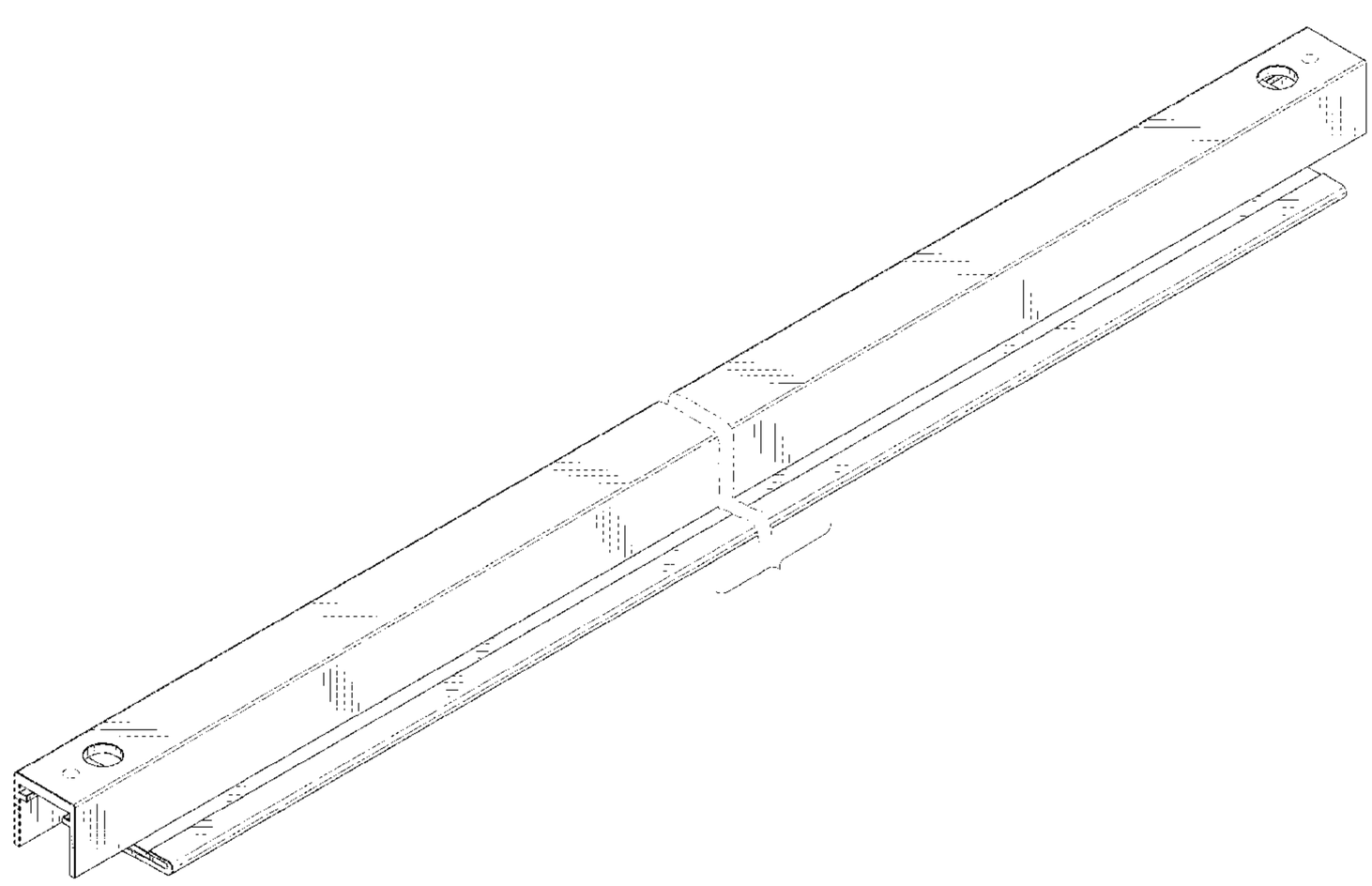

(56) **References Cited**

OTHER PUBLICATIONS

Linea L LTS 319 Linear System, available in architonic.com, announced Year 2018 [online], [site visited Oct. 25, 2022], Internet URL: https://www.architonic.com/en/product/sentinel-linea-l-lts-319-linear-system/20264863 (Year: 2018).*

* cited by examiner

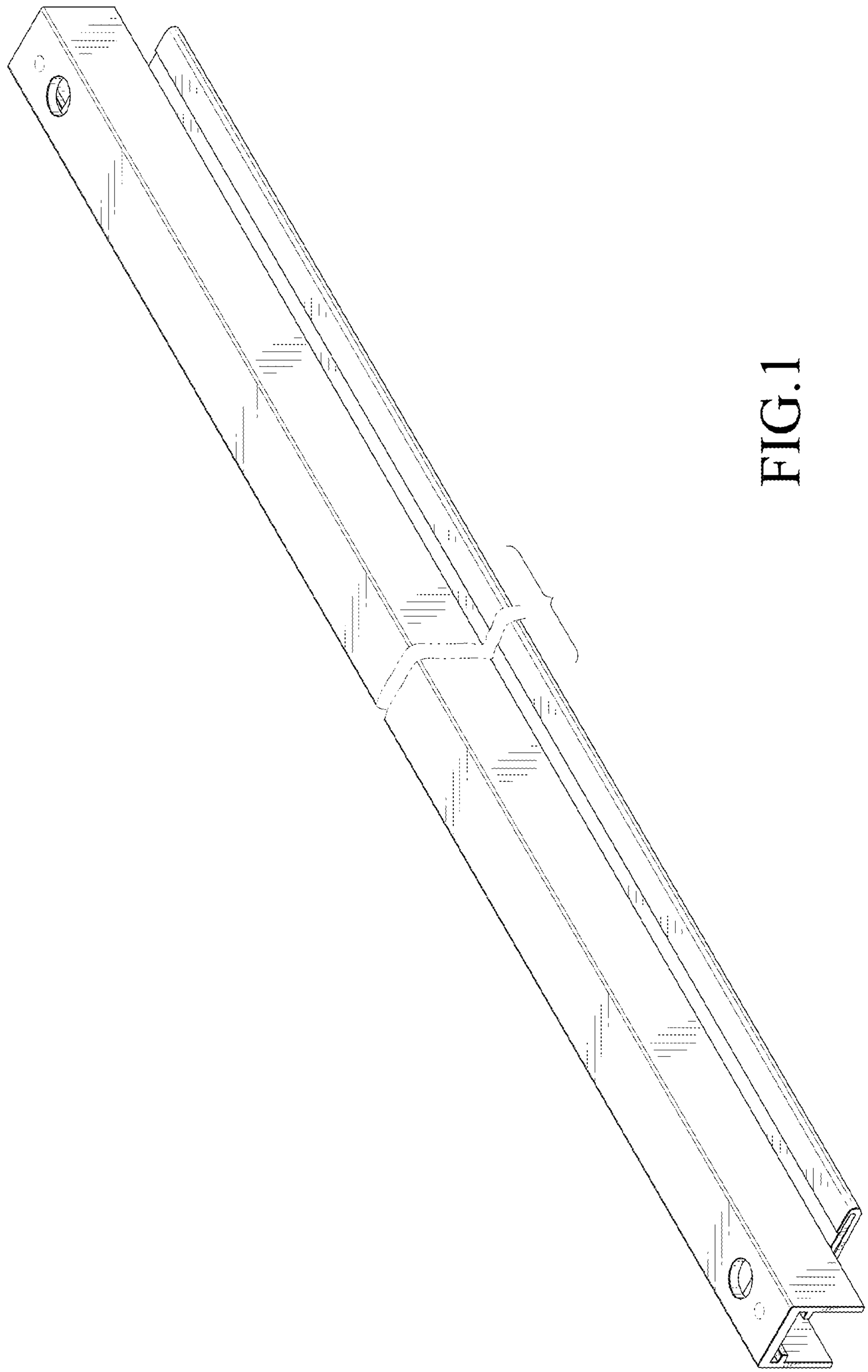

FIG. 1

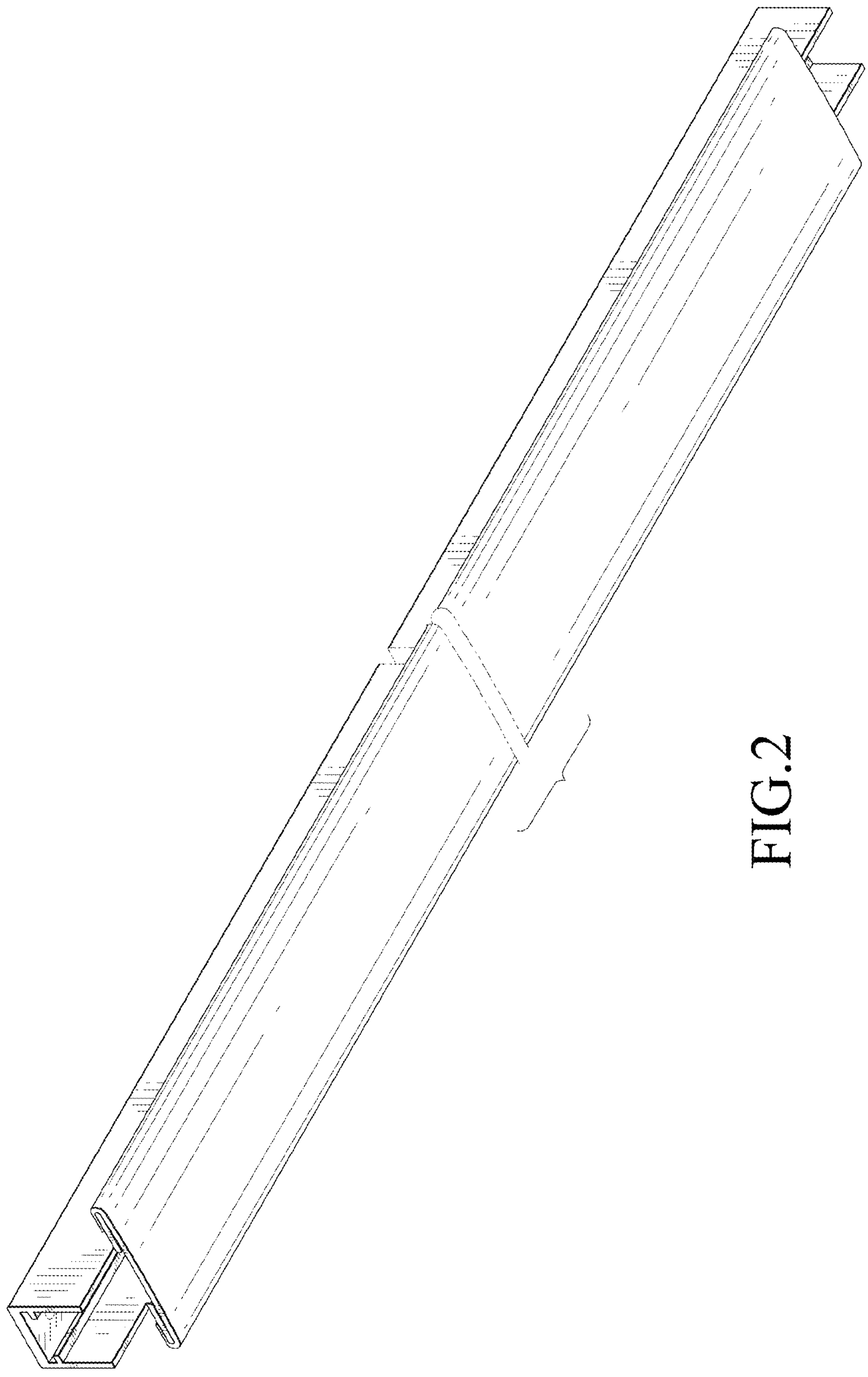

FIG.2

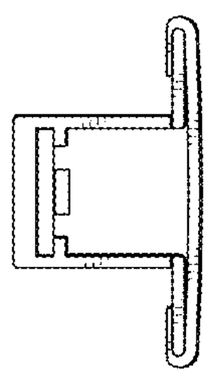

FIG.3

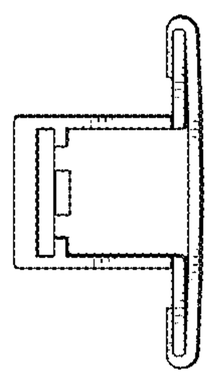

FIG.4

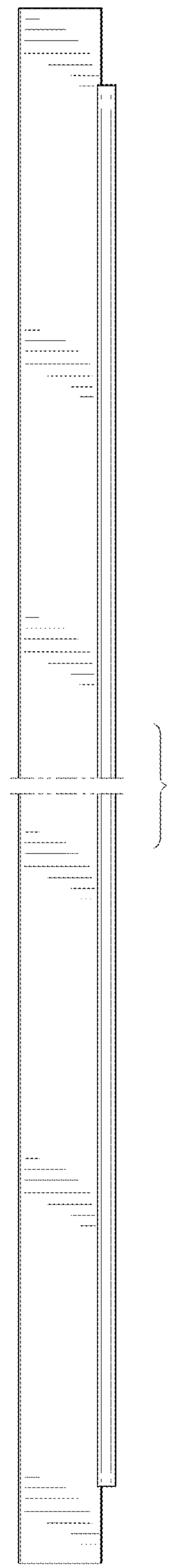

FIG.5

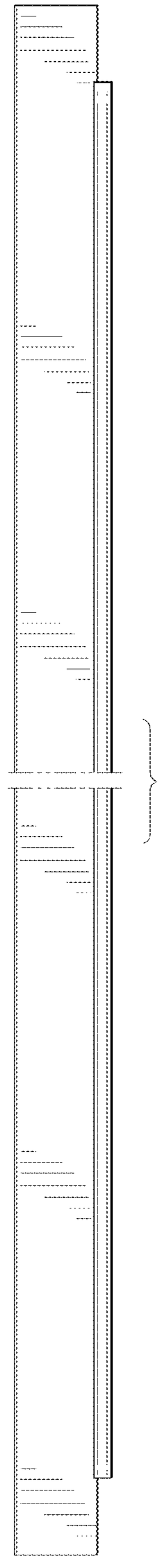

FIG.6

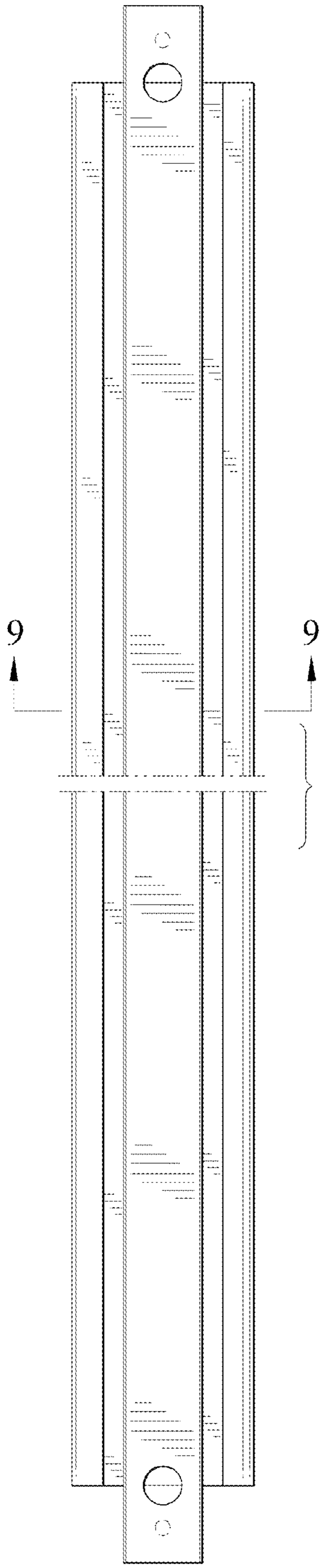

FIG.7

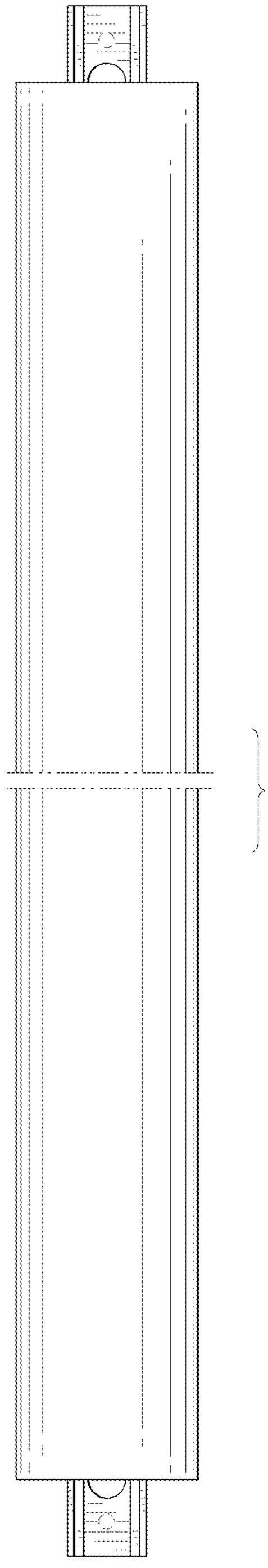

FIG.8

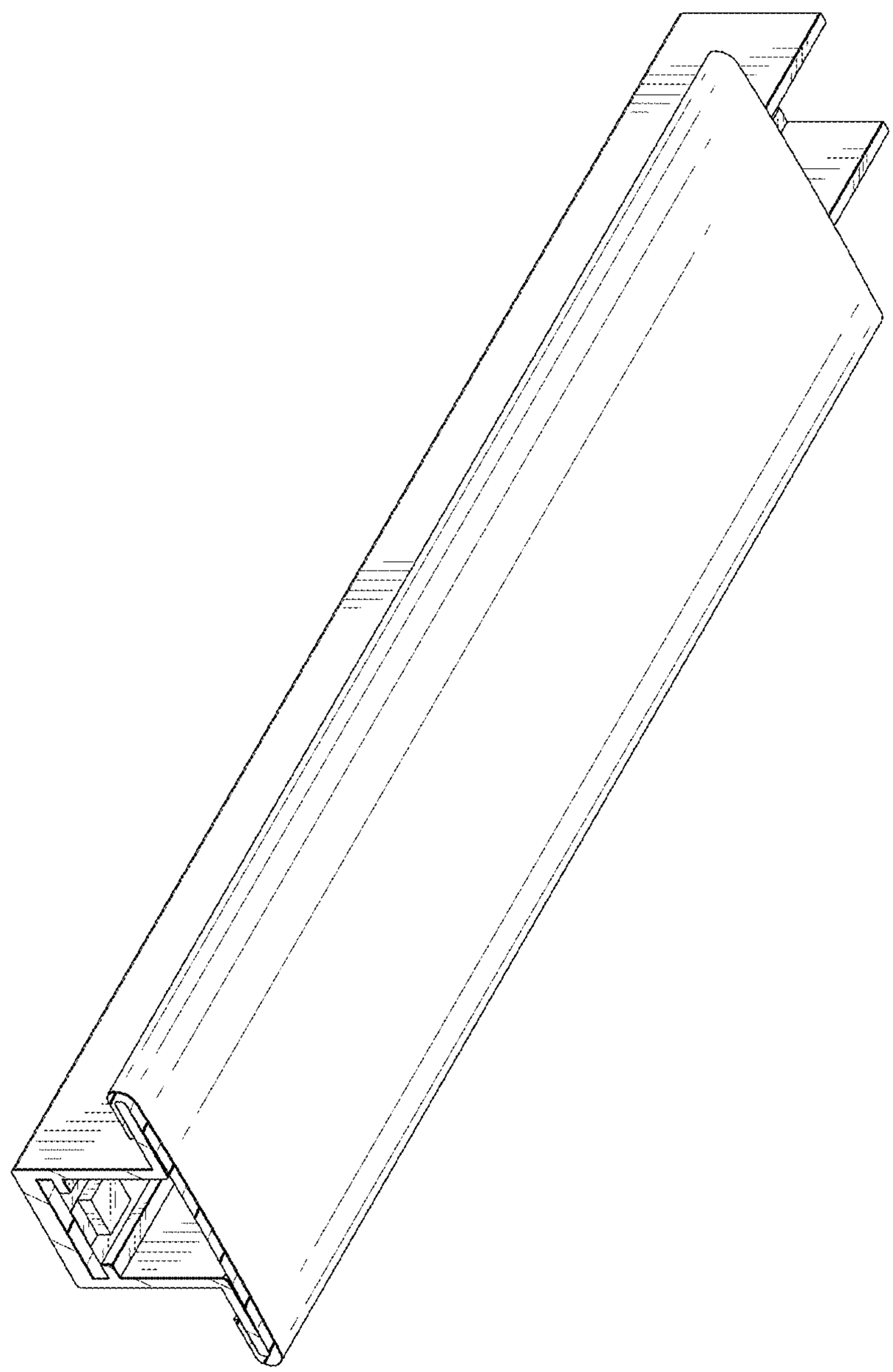

FIG.9