US00D987772S

(12) United States Design Patent
Zou

(10) Patent No.: US D987,772 S
(45) Date of Patent: ** May 30, 2023

(54) **WATER FILTER**

(71) Applicant: **Qingdao Ecopure Filter Co., Ltd.**, Qingdao (CN)

(72) Inventor: **Zhibin Zou**, Qingdao (CN)

(73) Assignee: **Qingdao Ecopure Filter Co., Ltd.**, Qingdao (CN)

(**) Term: **15 Years**

(21) Appl. No.: **29/740,334**

(22) Filed: **Jul. 2, 2020**

(51) **LOC (14) Cl.** **23-01**

(52) **U.S. Cl.**
USPC **D23/209**

(58) **Field of Classification Search**
USPC D7/300.1, 313; D14/228; D15/7; D23/200, 207–209, 213, 223, 233, 235, D23/259–269, 364–366; D24/108, 112, D24/129
CPC . F17C 1/00; F17C 5/06; A61M 11/02; A61M 11/041; A61L 9/00; A61L 9/03; A61L 9/12; A61L 9/122; A61L 2209/11; A61L 2209/14; A61L 2209/133; Y10S 261/17; Y10S 261/88; Y10S 261/89; B01D 27/08; B01D 35/02; B01D 35/30; B01D 35/005; B01D 2201/302; B01D 46/10; B01D 46/2411; B01D 46/0005; C02F 1/42; C02F 1/003
See application file for complete search history.

(56) **References Cited**

U.S. PATENT DOCUMENTS

3,907,688	A	9/1975	Close	
4,271,020	A	6/1981	Van Meter	
4,322,290	A	3/1982	Carl	
4,379,053	A	4/1983	Brane	
4,645,601	A	2/1987	Regunathan et al.	
4,735,716	A	4/1988	Petrucci et al.	
4,877,521	A	10/1989	Petrucci et al.	
5,102,543	A	4/1992	Burroughs	
5,354,464	A	10/1994	Slovak et al.	
5,645,720	A	7/1997	Godines	
5,653,871	A	8/1997	Thomsen	
5,705,067	A	1/1998	Sumi et al.	
5,715,699	A	2/1998	Coates et al.	
5,744,030	A	4/1998	Reid et al.	
6,120,685	A	9/2000	Carlson et al.	
6,303,031	B1	10/2001	Senner	
6,458,269	B1	10/2002	Bassett et al.	
6,949,189	B2	9/2005	Bassett et al.	
7,540,956	B1	6/2009	Kurth et al.	
7,540,957	B1	6/2009	Kurth et al.	
7,763,170	B2	7/2010	Bassett et al.	
8,246,883	B2	8/2012	Bassett et al.	
8,356,716	B1	1/2013	Kruckenberg et al.	
8,505,741	B2	8/2013	Scholz et al.	
8,562,830	B2	10/2013	Reid	
8,746,003	B2	6/2014	Yoon	
8,845,896	B2	9/2014	Kruckenberg et al.	
8,888,998	B2	11/2014	Swain	
9,027,361	B2	5/2015	Shaffer et al.	
9,067,154	B1	6/2015	Branscomb et al.	
9,314,722	B2	4/2016	Reid	
9,421,485	B2	8/2016	Reid	
9,931,589	B2	4/2018	Tubby et al.	
D820,947	S	6/2018	An et al.	
D820,948	S *	6/2018	An	D23/209
10,071,326	B2	9/2018	Schmoll	
D831,786	S *	10/2018	Zou	D23/209
10,188,972	B2	1/2019	You et al.	
10,226,722	B1	3/2019	Baird	
D854,122	S *	7/2019	An	D23/209
D856,472	S *	8/2019	Zou	D23/209
D857,157	S *	8/2019	Zou	D23/209
D857,158	S *	8/2019	Zou	D23/209
D865,119	S *	10/2019	An	D23/209
10,532,302	B2	1/2020	You et al.	
D878,517	S *	3/2020	Zou	D23/209
10,639,570	B2	5/2020	You et al.	
10,653,984	B2	5/2020	You et al.	
10,724,786	B2	7/2020	Park	
10,734,498	B1	8/2020	Brown et al.	
10,737,206	B2	8/2020	Reid	
10,780,377	B2	9/2020	Schmitt et al.	
10,807,026	B2	10/2020	Stamey, Jr. et al.	
D913,416	S *	3/2021	Qiang	D23/209
2003/0085572	A1	5/2003	Froment et al.	
2004/0144710	A1	7/2004	Bassett et al.	
2004/0211931	A1	10/2004	Olson et al.	
2005/0023206	A1	2/2005	Fritze	
2005/0167352	A1	8/2005	Burrows et al.	
2006/0213821	A1	9/2006	Choi et al.	
2006/0243652	A1	11/2006	Tubby et al.	

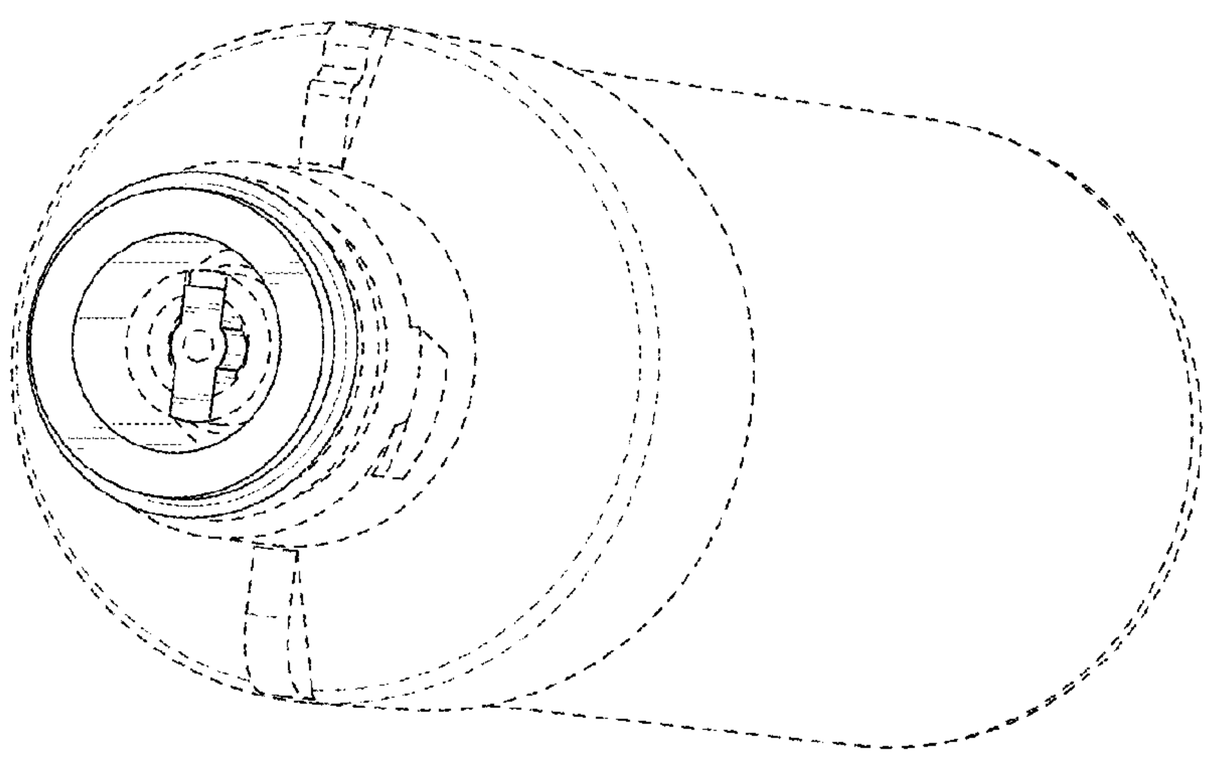

2006/0254971	A1	11/2006	Tubby et al.
2007/0144953	A1	6/2007	Rivi
2007/0227959	A1	10/2007	Sinur et al.
2008/0142431	A1	6/2008	Lim et al.
2009/0236271	A1	9/2009	Eserkaln et al.
2009/0236277	A1	9/2009	Kurth et al.
2009/0321340	A1	12/2009	Rampen et al.
2010/0170841	A1	7/2010	An et al.
2010/0275633	A1	11/2010	An et al.
2011/0120928	A1	5/2011	Schmitt
2011/0139698	A1	6/2011	Freystedt et al.
2011/0168613	A1	7/2011	van Savooijen et al.
2011/0203985	A1	8/2011	Reid
2012/0031821	A1	2/2012	Swain
2013/0220910	A1	8/2013	Gu et al.
2013/0298378	A1	11/2013	Suri
2014/0061119	A1	3/2014	Croissant et al.
2014/0144173	A1	5/2014	Shaffer et al.
2014/0175000	A1	6/2014	Reid
2014/0230481	A1	8/2014	Yun et al.
2015/0183672	A1	7/2015	Washburn et al.
2016/0025406	A1	1/2016	An
2016/0136547	A1	5/2016	Nuss
2016/0144301	A1	5/2016	Tadlock et al.
2016/0271535	A1	9/2016	Dong et al.
2016/0271536	A1	9/2016	Joung et al.
2017/0021294	A1	1/2017	Reid
2017/0072347	A1*	3/2017	Schmoll B01D 35/30
2017/0259196	A1	9/2017	Foix et al.
2017/0340993	A1	11/2017	Zou
2017/0350641	A1	12/2017	Park
2018/0015400	A1	1/2018	Park et al.
2018/0369728	A1	12/2018	You et al.
2022/0176280	A1	6/2022	Zou

FOREIGN PATENT DOCUMENTS

CN	1683883	A	10/2005
CN	1683886	A	10/2005
CN	100498163	C	6/2009
CN	201524475	U	7/2010
CN	102065974	B	7/2014
CN	107215905	A	9/2017
CN	108355494	A	8/2018
CN	305093856	S	4/2019
CN	210176521	U	3/2020
CN	306274350	S	1/2021
DE	102014006703	B4	10/2019
EP	1328329	B1	12/2004
EP	3222337	A1	9/2017
EP	3552680	A1	10/2019
EP	3552684	A1	10/2019
EP	3650101	A1	5/2020
GB	1283814	A	8/1972
JP	10066804	A	3/1998
JP	5765676	B2	8/2015
KR	1020030068235	A	8/2003
KR	200384558	Y1	5/2005
KR	100668767	B1	1/2007
KR	100712266	B1	5/2007
KR	1020070081912	A	8/2007
KR	100797051	B1	1/2008
KR	1020080006177	A	1/2008
KR	100804302	B1	2/2008
KR	100873665	B1	12/2008
KR	1020090092881	A	9/2009
KR	1020100012979	A	2/2010
KR	2020110006467	U	6/2011
KR	101127426	B1	3/2012
KR	1020130048427	A	5/2013
KR	101311654	B1	9/2013
KR	101478965	B1	12/2014
KR	1020150057791	A	5/2015
KR	1020160000194	A	1/2016
KR	101601391	B1	3/2016
KR	101668804	B1	10/2016
KR	101706993	B1	2/2017
KR	1020190045880	A	5/2019
KR	1020190045881	A	5/2019
KR	1020190081761	A	7/2019
WO	0191881	A2	12/2001
WO	2012086892	A1	6/2012
WO	2013039194	A1	3/2013
WO	2014056161	A1	4/2014
WO	2014117426	A1	8/2014
WO	2014171603	A1	10/2014
WO	2015167248	A1	11/2015
WO	2018104416	A1	6/2018

OTHER PUBLICATIONS

https://www.lg.com/us/kitchen-accessories/lg-LT1000P-water-filter.
Design U.S. Appl. No. 29/802,158.
Design U.S. Appl. No. 29/806,575.
U.S. Appl. No. 17/366,014.
Watts Premier WP531130 Pure UF-3 Three-Stage Water Filtration System with Top Mount Twist Faucet, Brushed Nickel, https://www.amazon.com/Watts-Premier-Filter-Pure-3-Stage-Filtration/dp/B002XISS2Y.
Watts Premier 531417 RO Pure Plus (VOC) Reverse Osmosis w/Brushed Nickel, Top-Mount Twist Faucet, https://www.amazon.com/Watts-Premier-531417-Reverse-Osmosis/dp/B00GCS9LZ4.
Geekpure Replacement Pre-Filters Set Twsit Quick Change Filters for RO-TW Series Reverse Osmosis System, https://www.amazon.com/Geekpure-Replacement-Pre-Filter-Sediment-1xGranular/dp/B075FRB2TJ/ref=sr_1_9?crid=YDO8Y3BXP55D&keywords=geekpure&qid=1680548772&sprefix=geekpure%2Caps%2C109&sr=8-9.

* cited by examiner

Primary Examiner — Gino Colan
Assistant Examiner — David OBrien
(74) *Attorney, Agent, or Firm* — Calfee, Halter & Griswold LLP

(57) **CLAIM**

The ornamental design for a water filter, as shown and described.

DESCRIPTION

FIG. **1** is a line drawing of a top/front/right perspective view of a first embodiment of a water filter of the present design;
FIG. **2** is a front elevational view thereof;
FIG. **3** is a rear elevational view thereof;
FIG. **4** is a right side elevational view thereof;
FIG. **5** is a left side elevational view thereof;
FIG. **6** is a top plan view thereof;
FIG. **7** is a bottom plan view thereof;
FIG. **8** is a line drawing of a top/front/right perspective view of a second embodiment of a water filter of the present design;
FIG. **9** is a front elevational view thereof;
FIG. **10** is a rear elevational view thereof;
FIG. **11** is a right side elevational view thereof;
FIG. **12** is a left side elevational view thereof;
FIG. **13** is a top plan view thereof;
FIG. **14** is a bottom plan view thereof;
FIG. **15** is a line drawing of a top/front/right perspective view of a third embodiment of a water filter of the present design;
FIG. **16** is a front elevational view thereof
FIG. **17** is a rear elevational view thereof;
FIG. **18** is a right side elevational view thereof;
FIG. **19** is a left side elevational view thereof;
FIG. **20** is a top plan view thereof;

FIG. **21** is a bottom plan view thereof;
FIG. **22** is a line drawing of a top/front/right perspective view of a fourth embodiment of a water filter of the present design;
FIG. **23** is a front elevational view thereof;
FIG. **24** is a rear elevational view thereof;
FIG. **25** is a right side elevational view thereof;
FIG. **26** is a left side elevational view thereof;
FIG. **27** is a top plan view thereof; and,
FIG. **28** is a bottom plan view thereof.
The broken lines shown in the drawings are for the purpose of illustrating portions of the water filter and form no part of the claimed design. Surface shading has been included to indicate the surface of the filter is cylindrical.

1 Claim, 28 Drawing Sheets

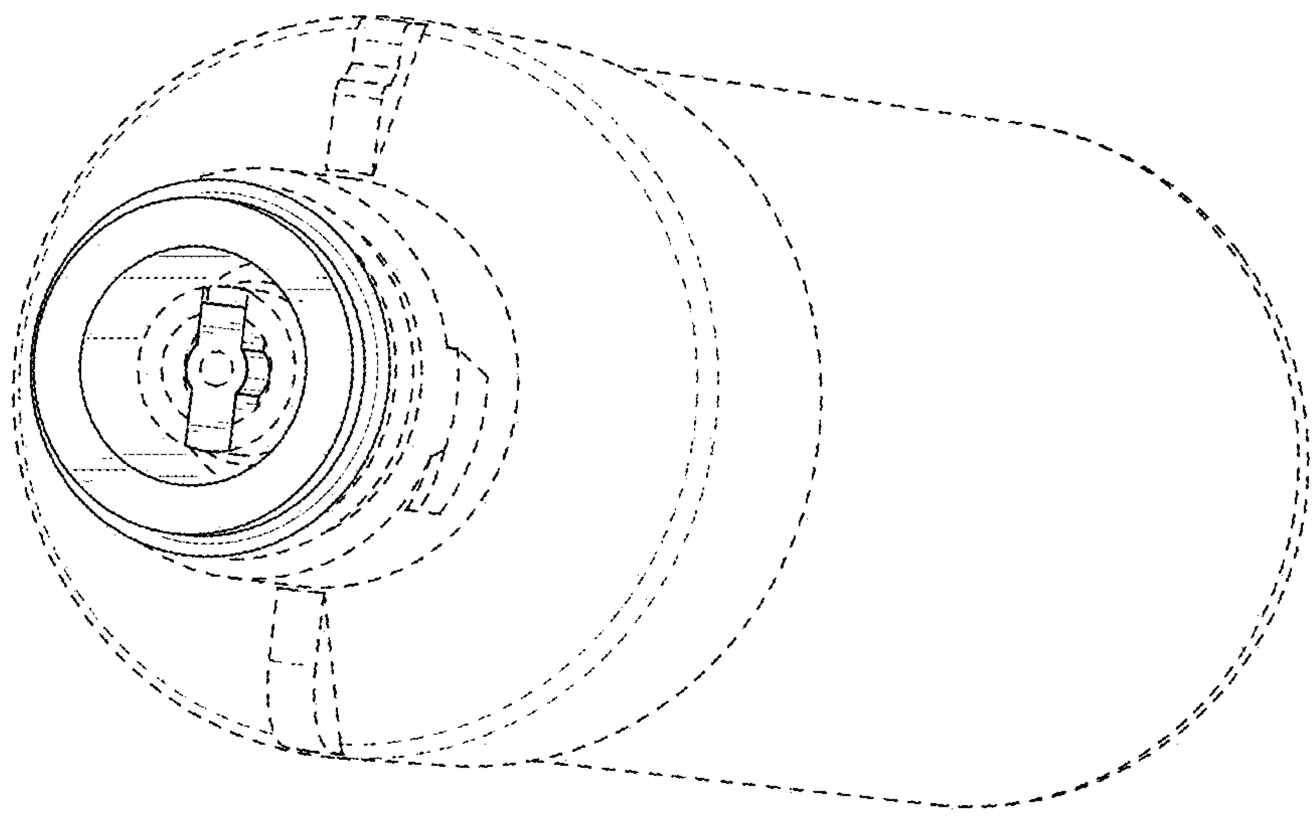

FIG. 1

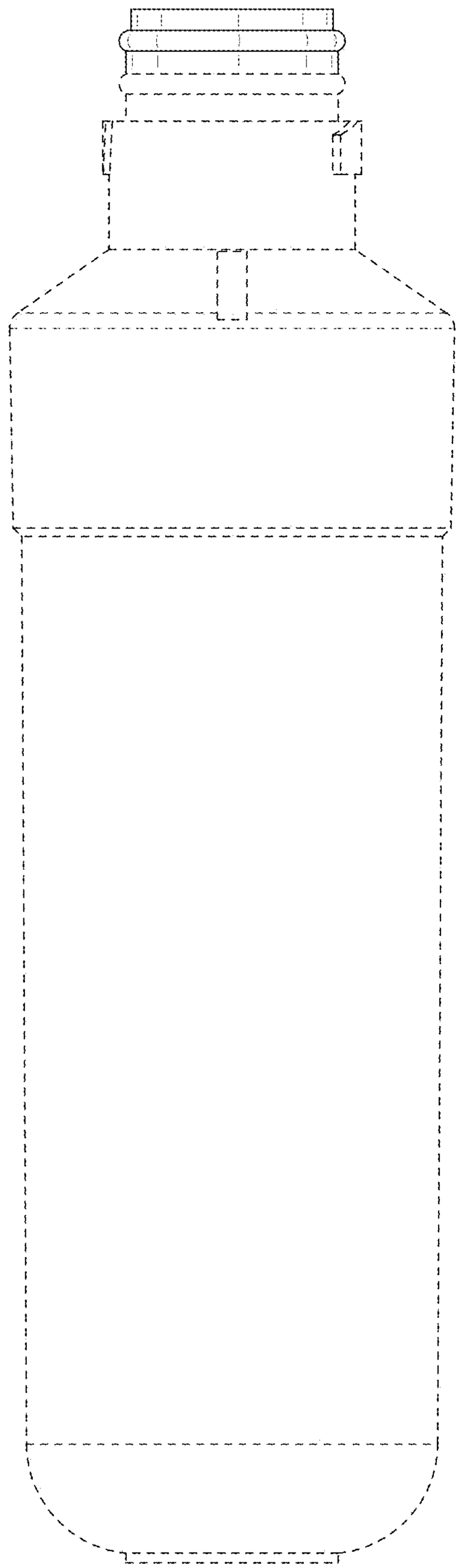

FIG. 2

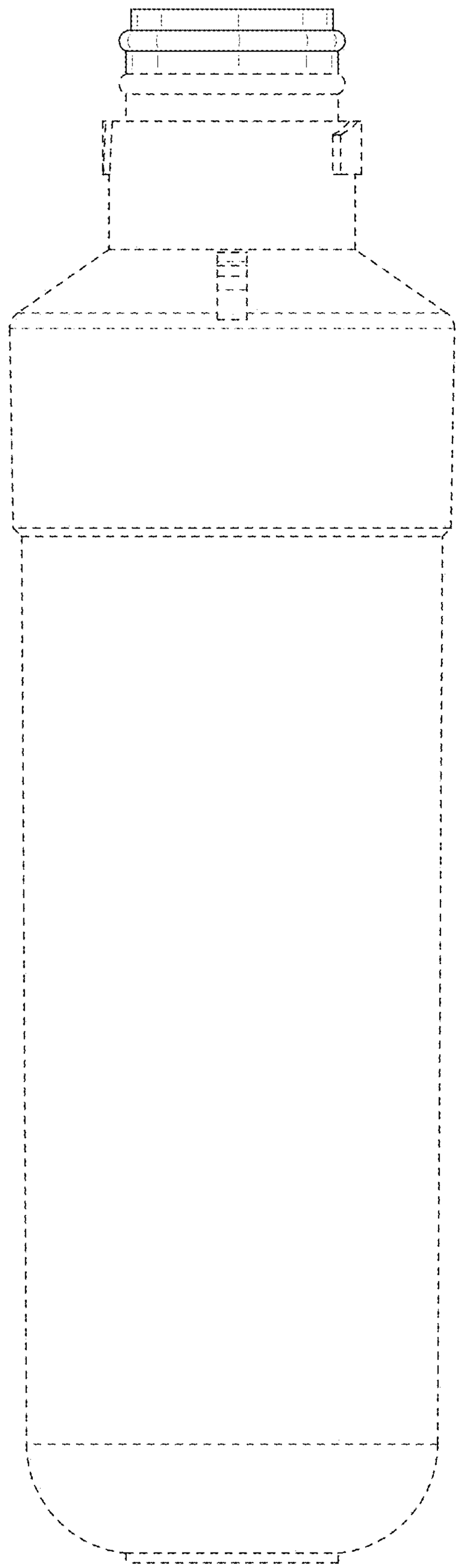

FIG. 3

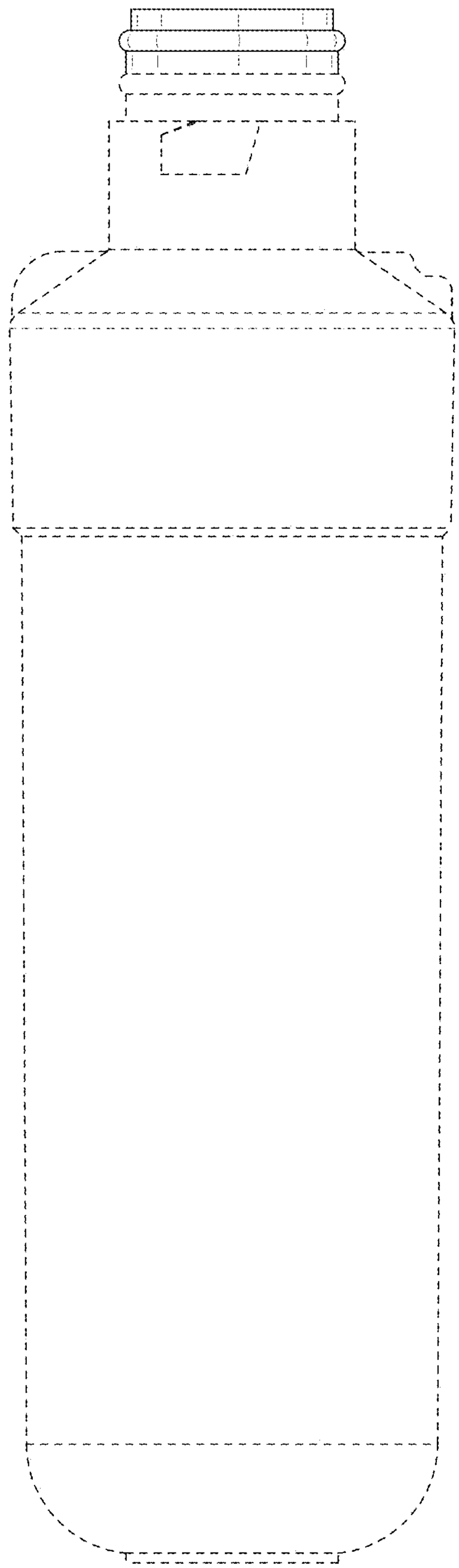

FIG. 4

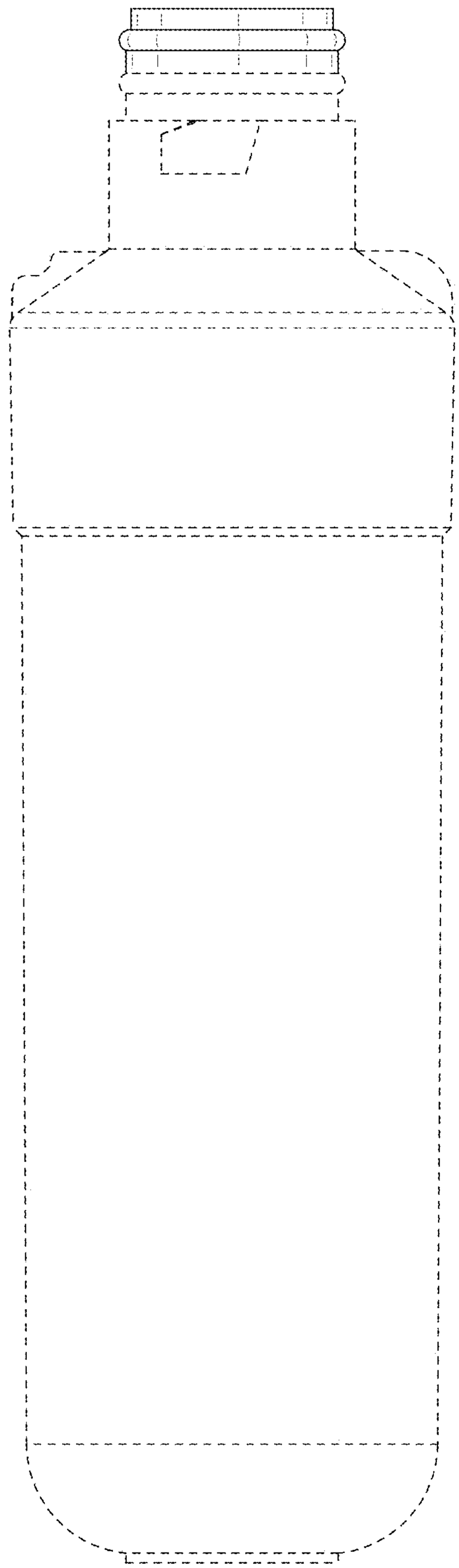

FIG. 5

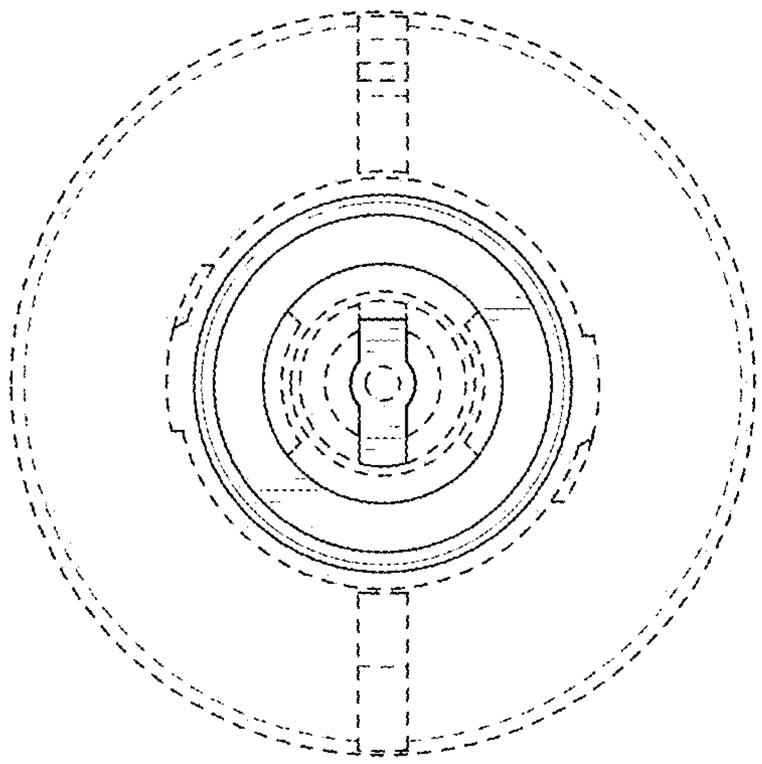

FIG. 6

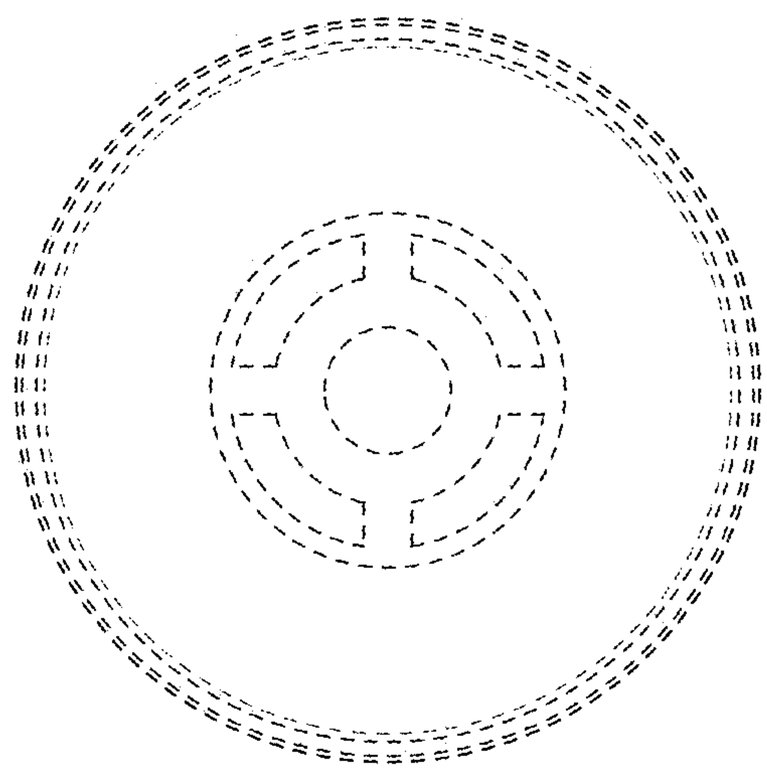

FIG. 7

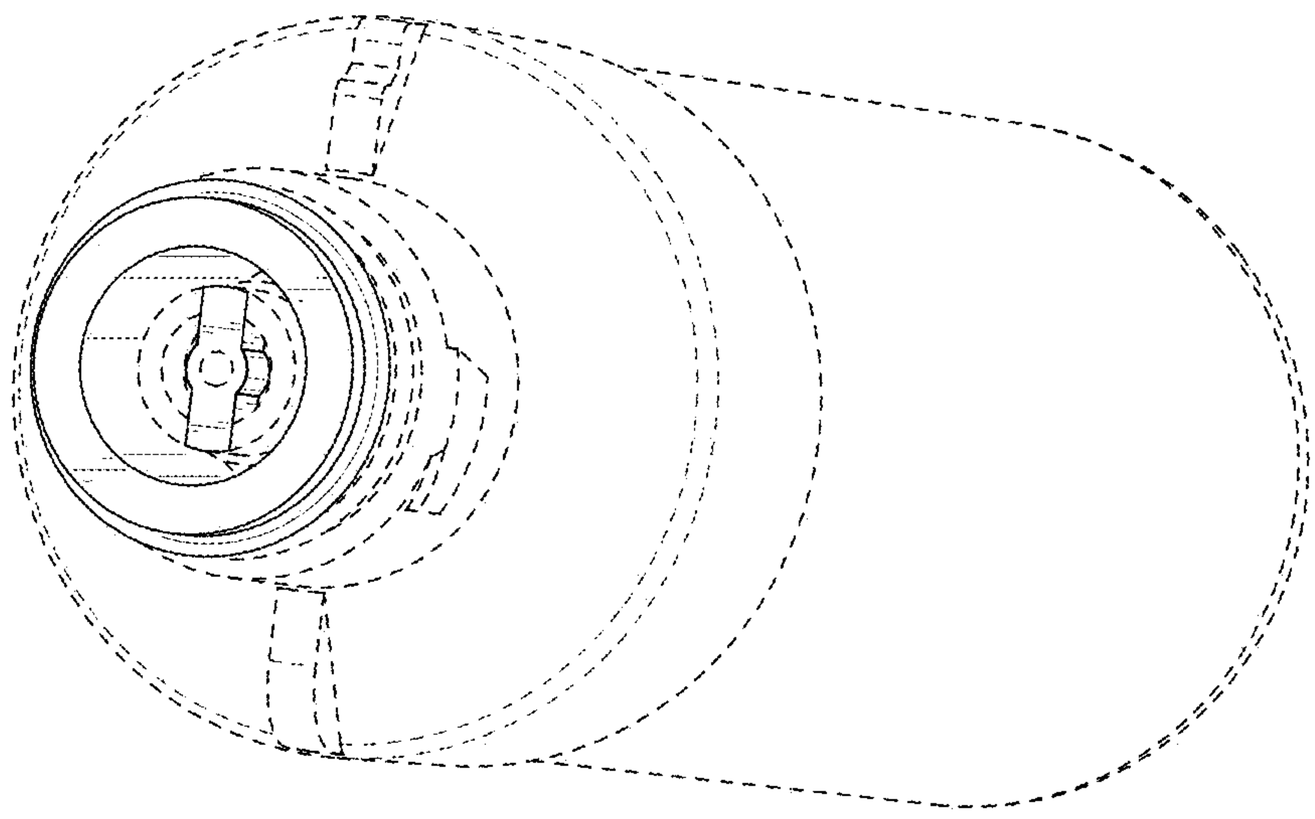

FIG. 8

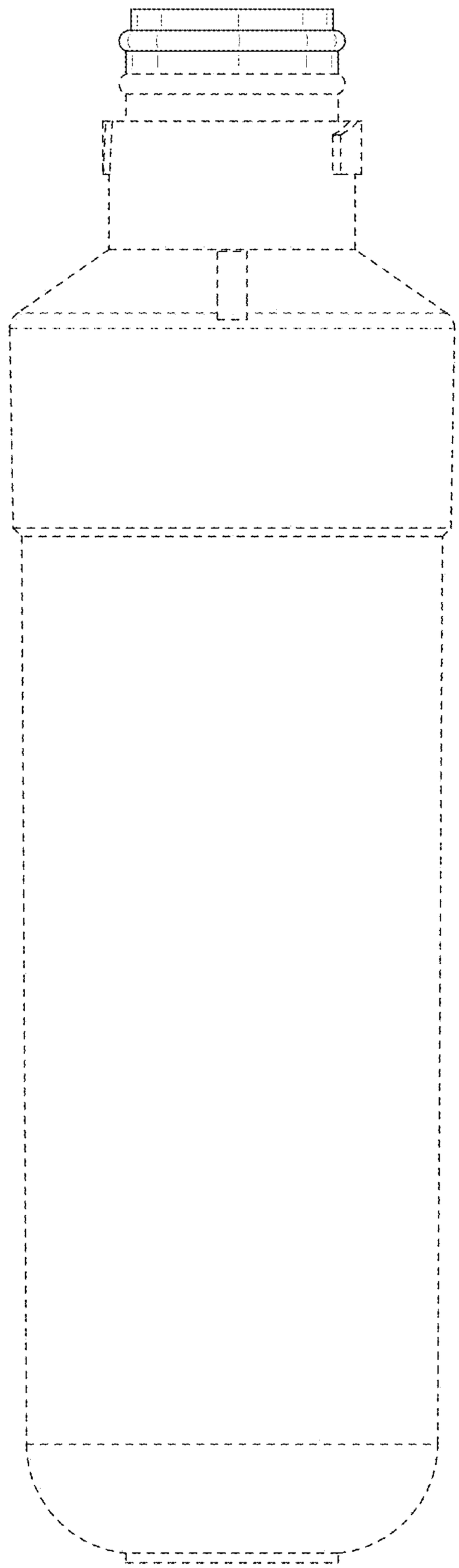

FIG. 9

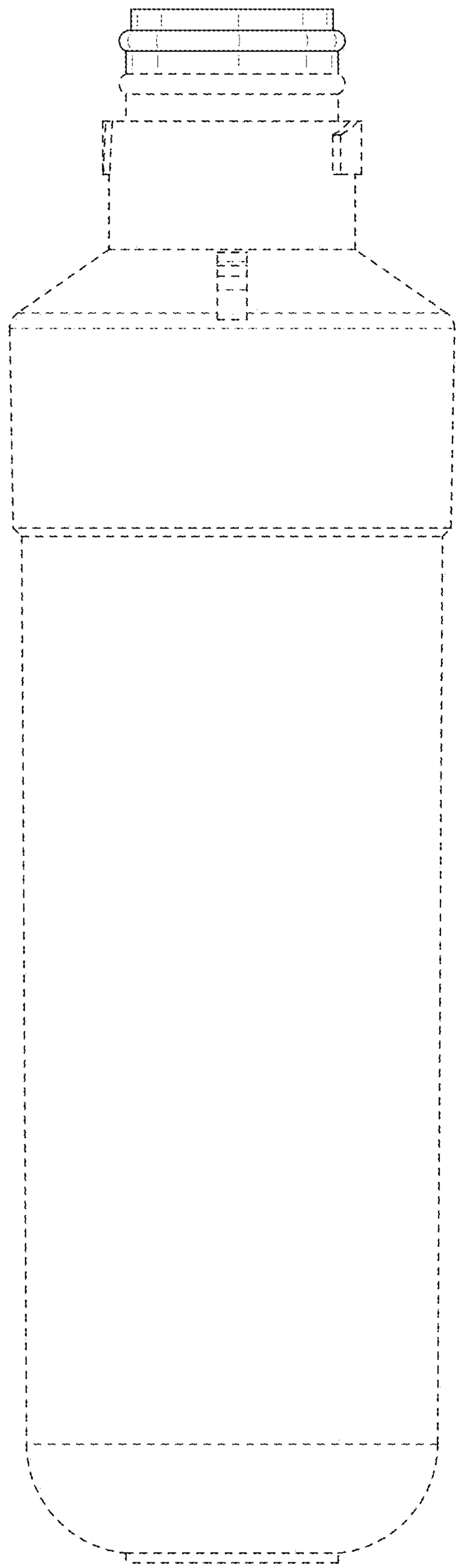

FIG. 10

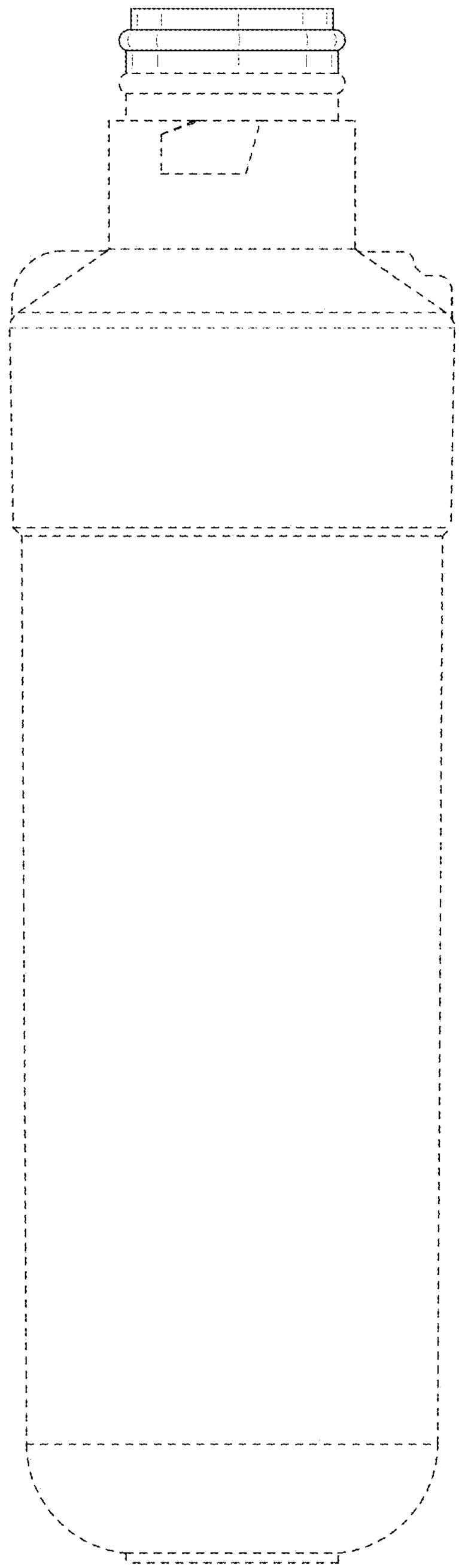

FIG. 11

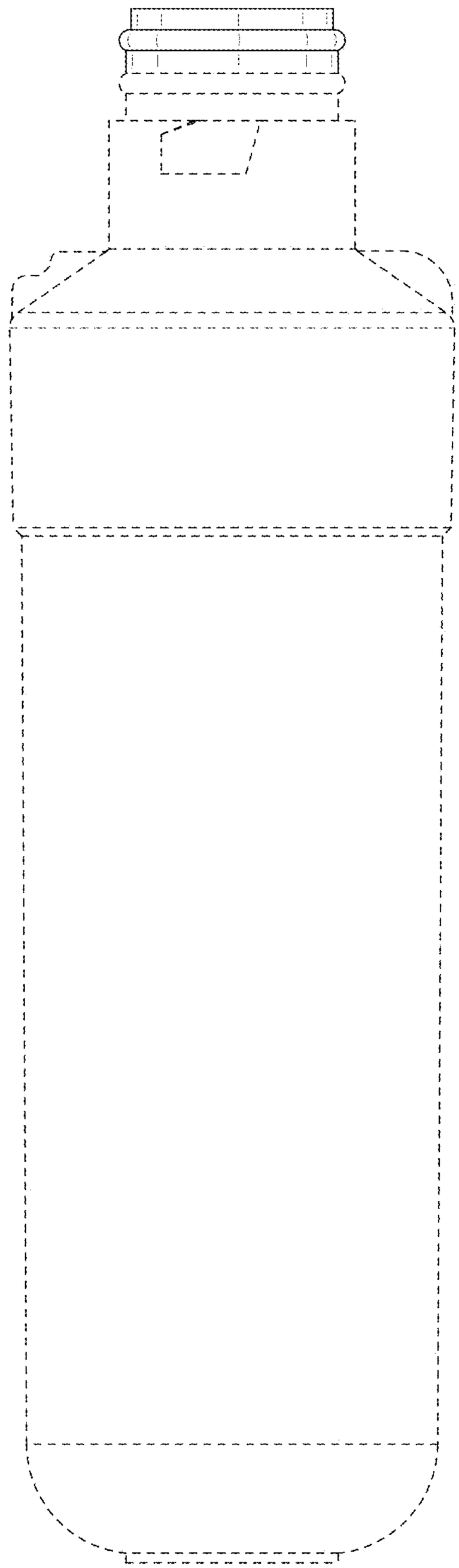

FIG. 12

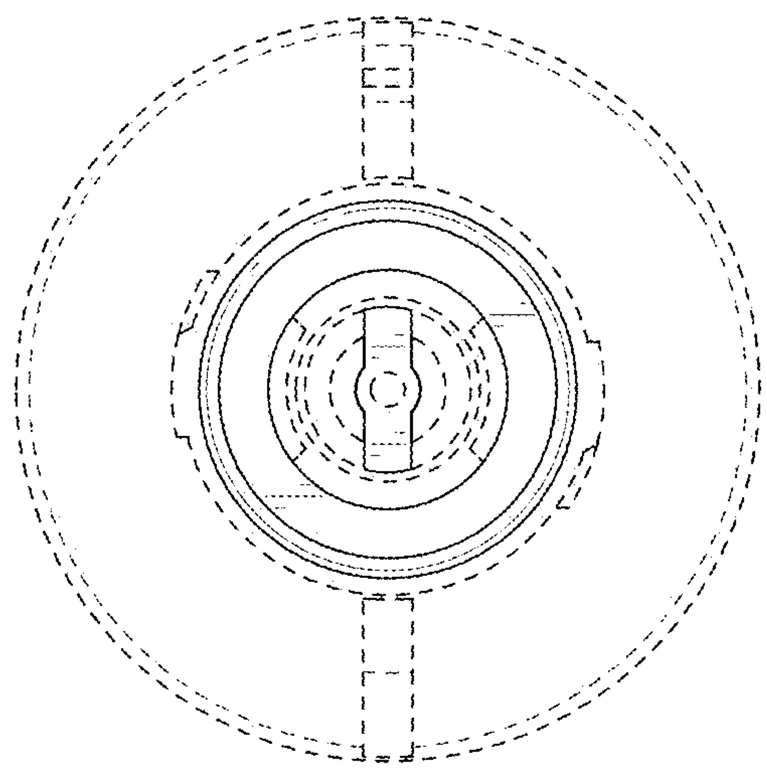

FIG. 13

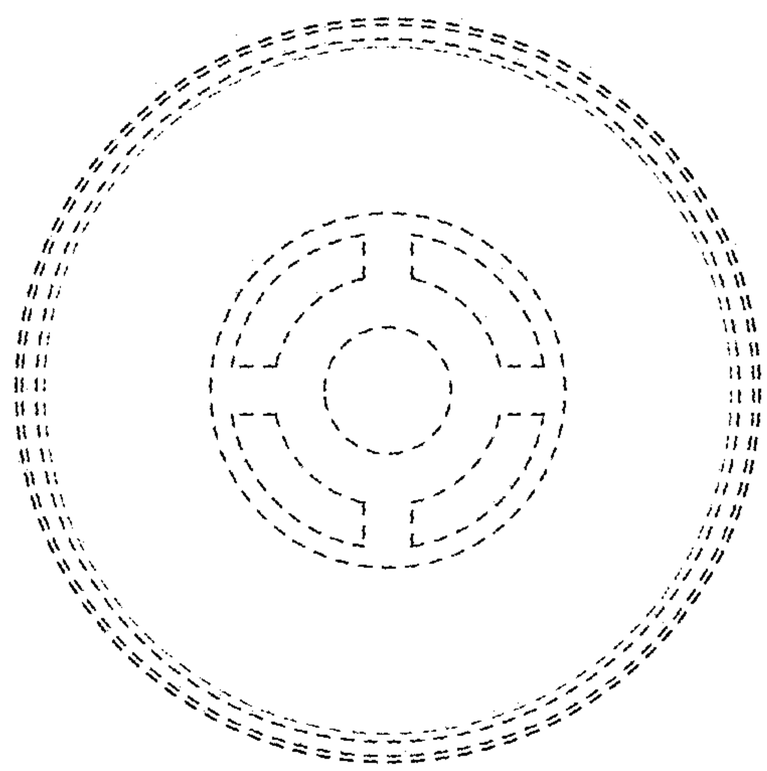

FIG. 14

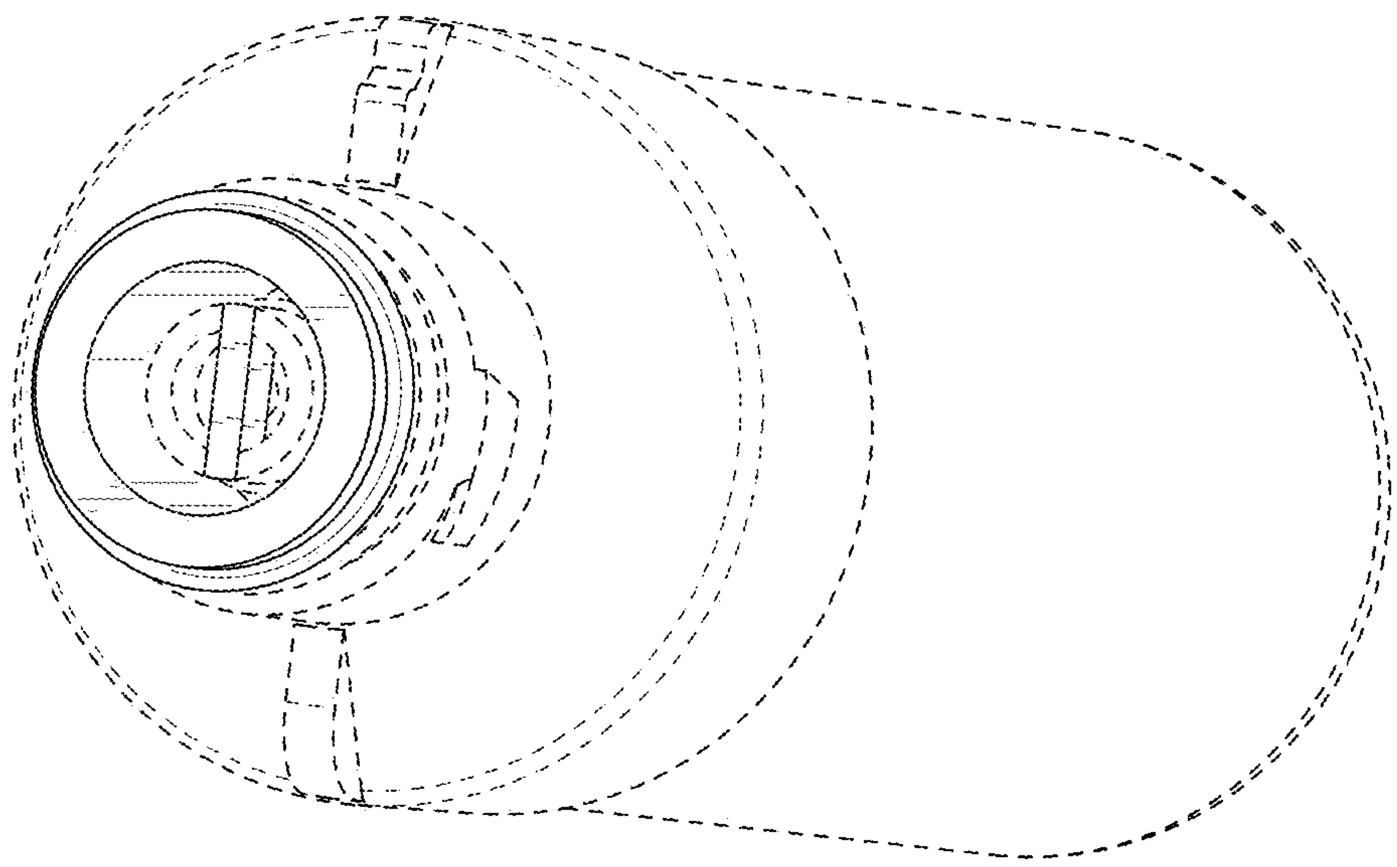

FIG. 15

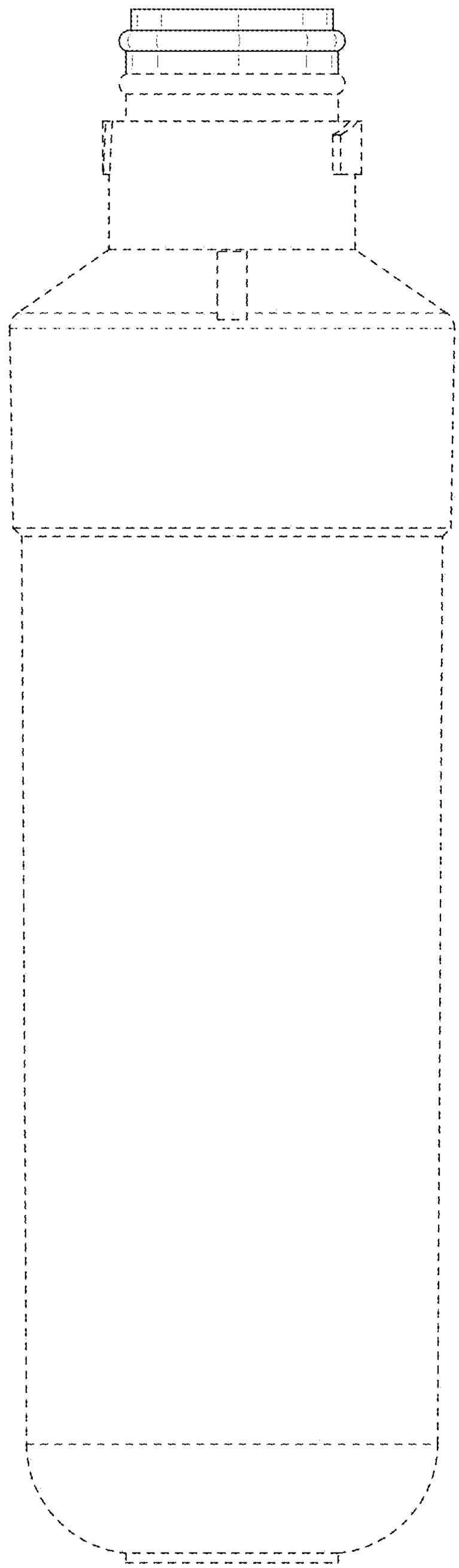

FIG. 16

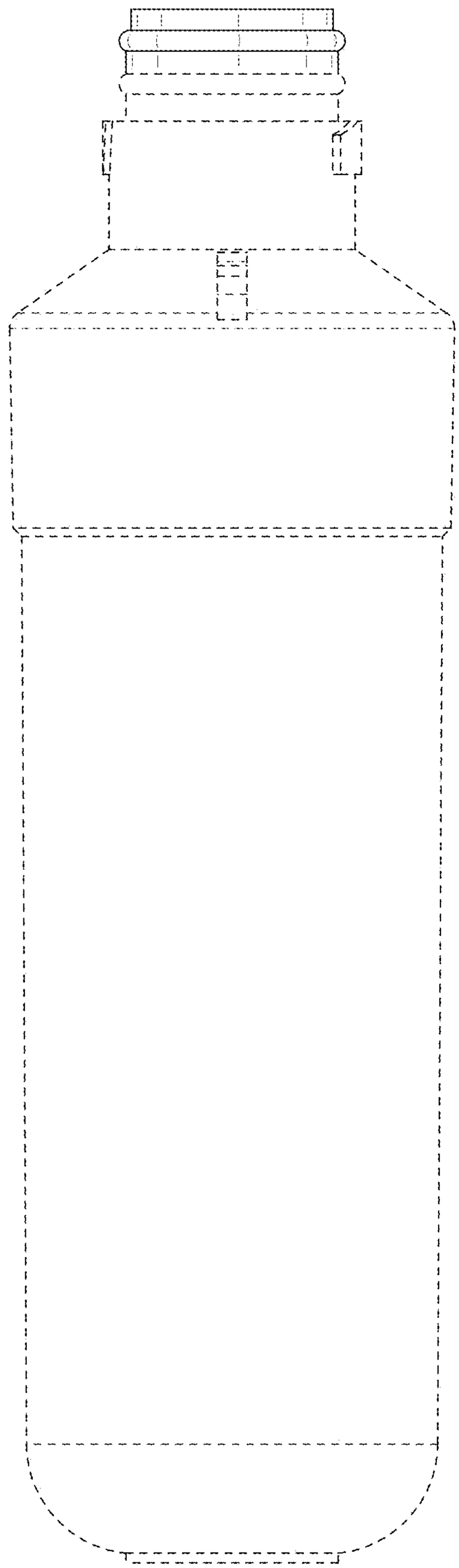

FIG. 17

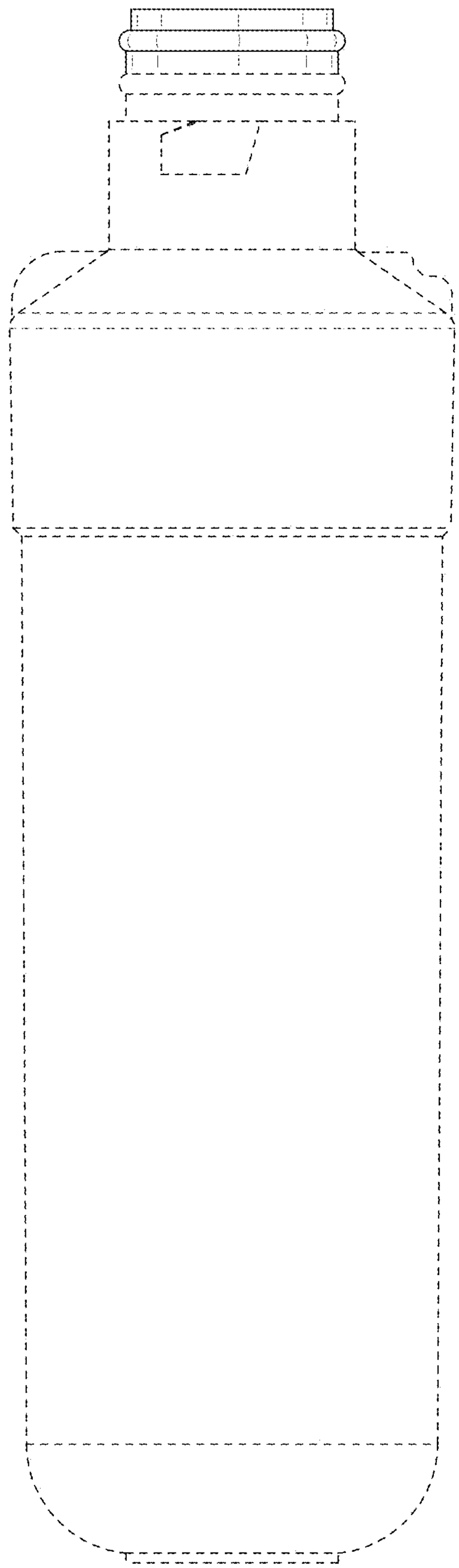

FIG. 18

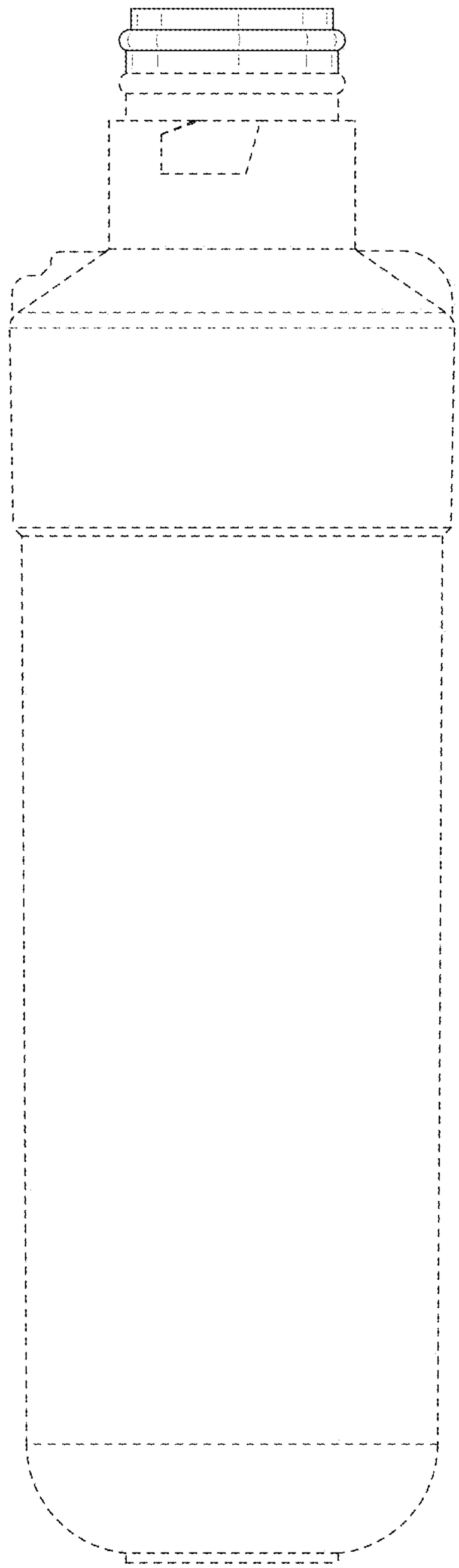

FIG. 19

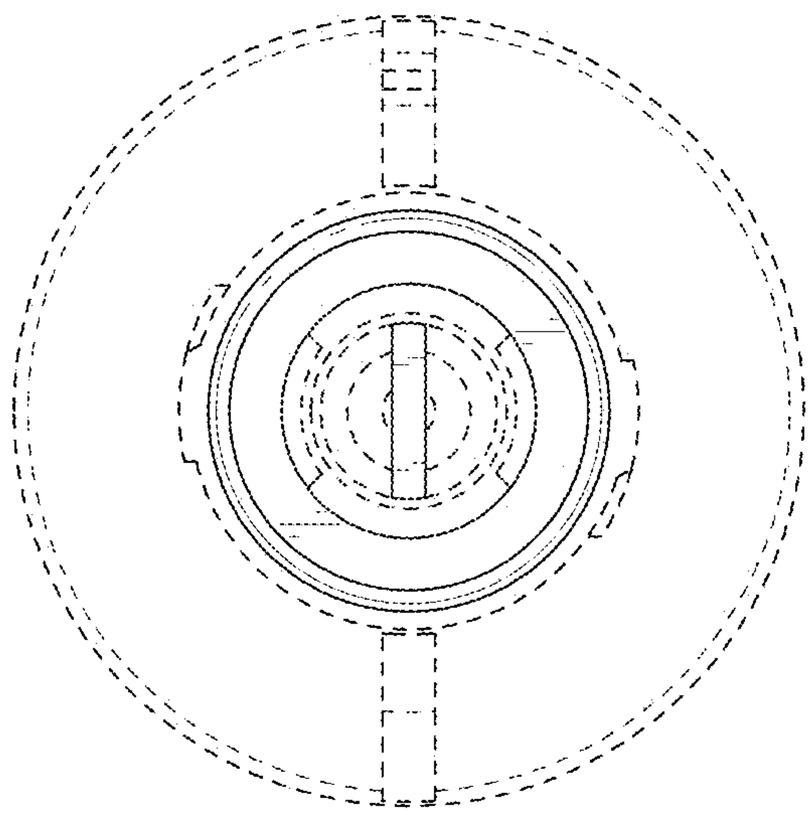

FIG. 20

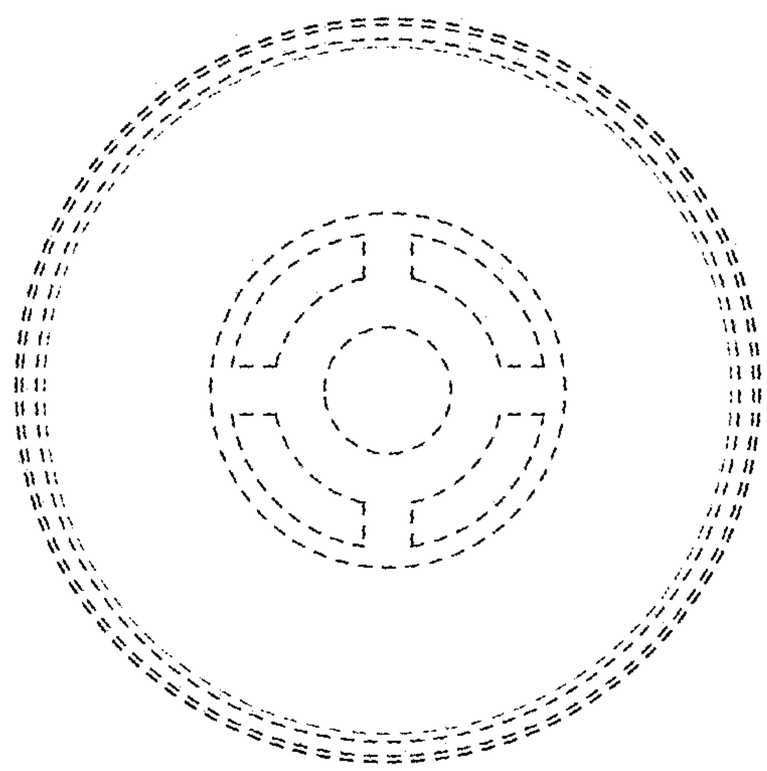

FIG. 21

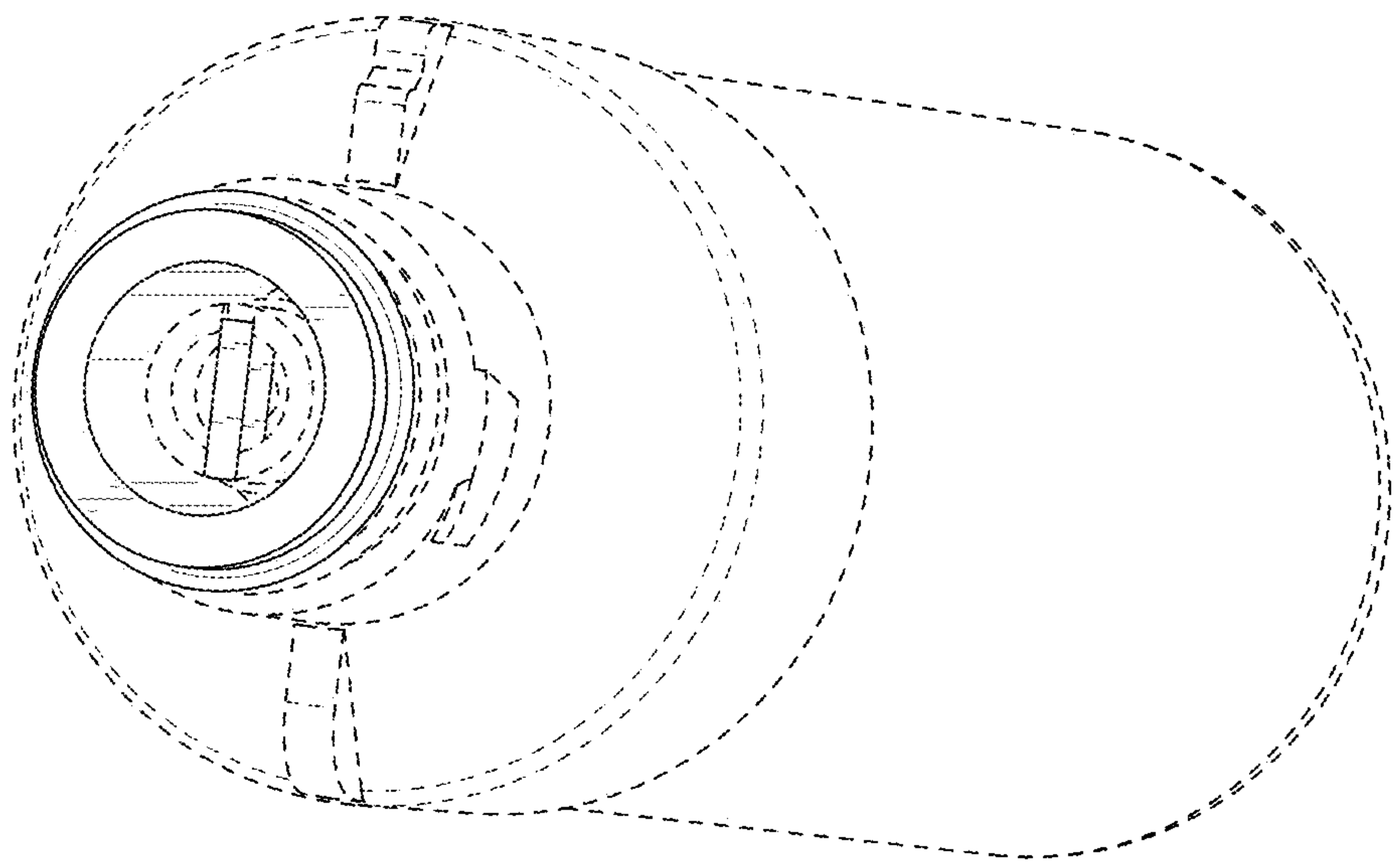

FIG. 22

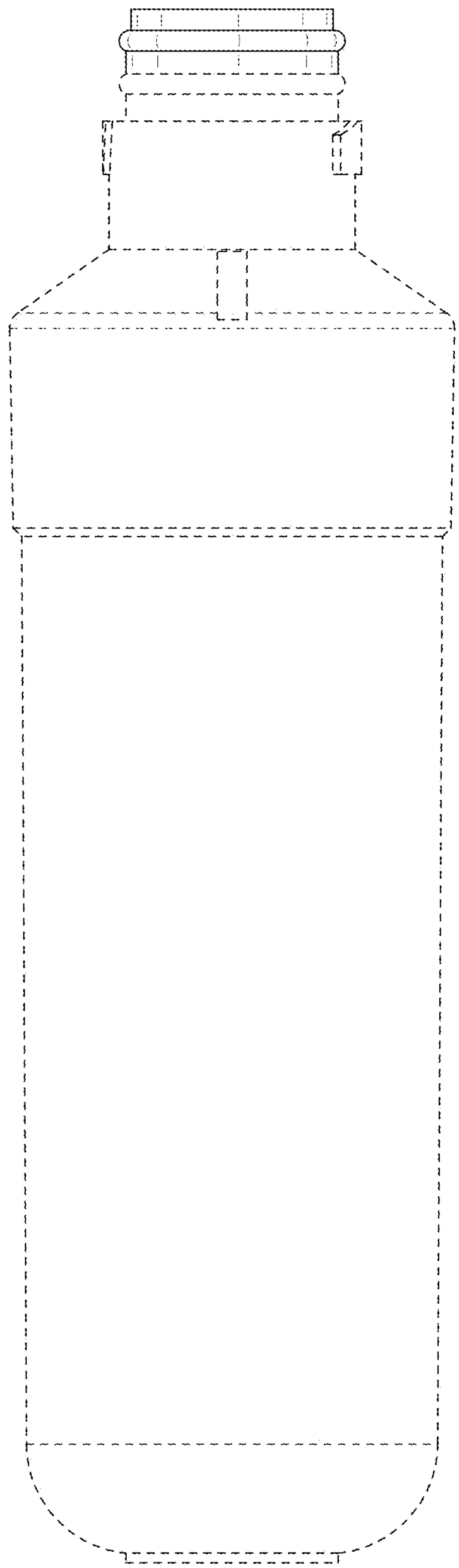

FIG. 23

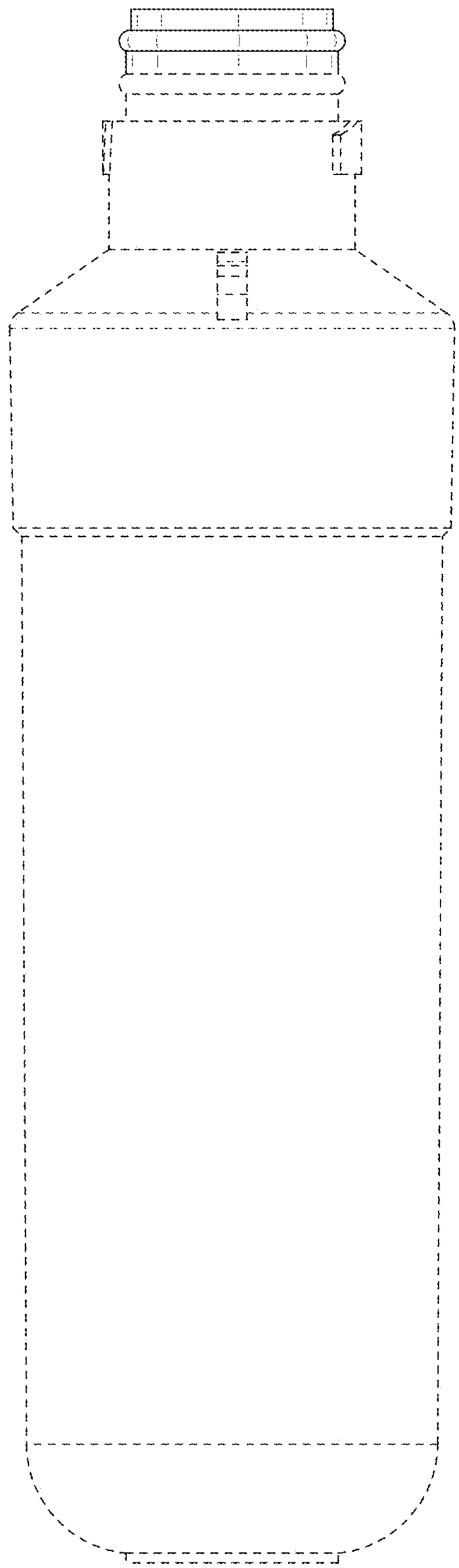

FIG. 24

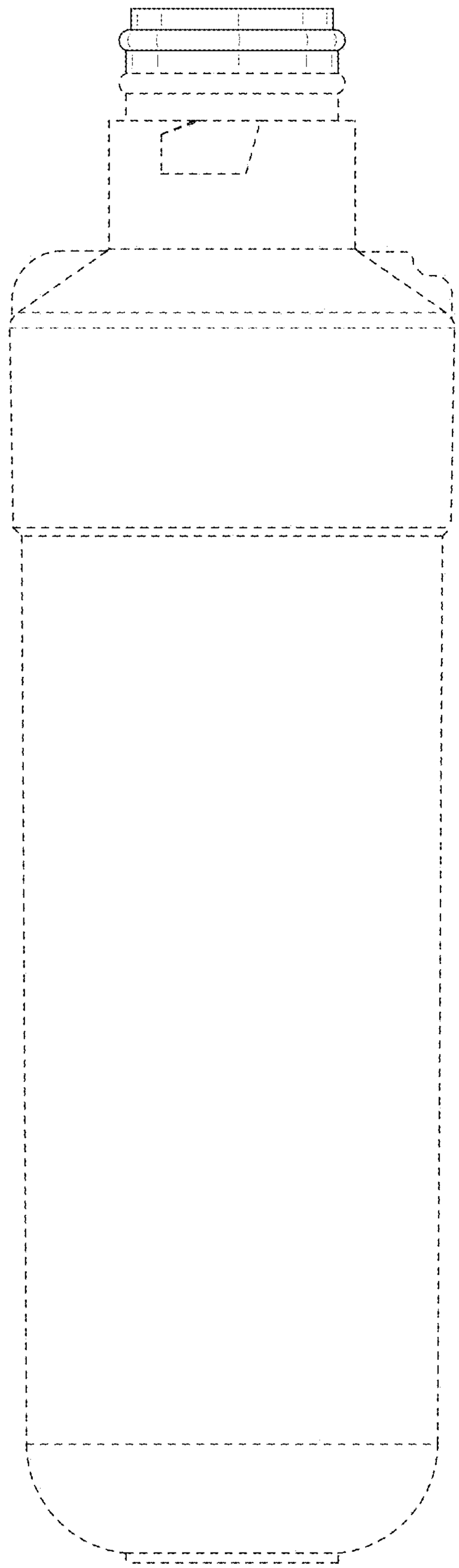

FIG. 25

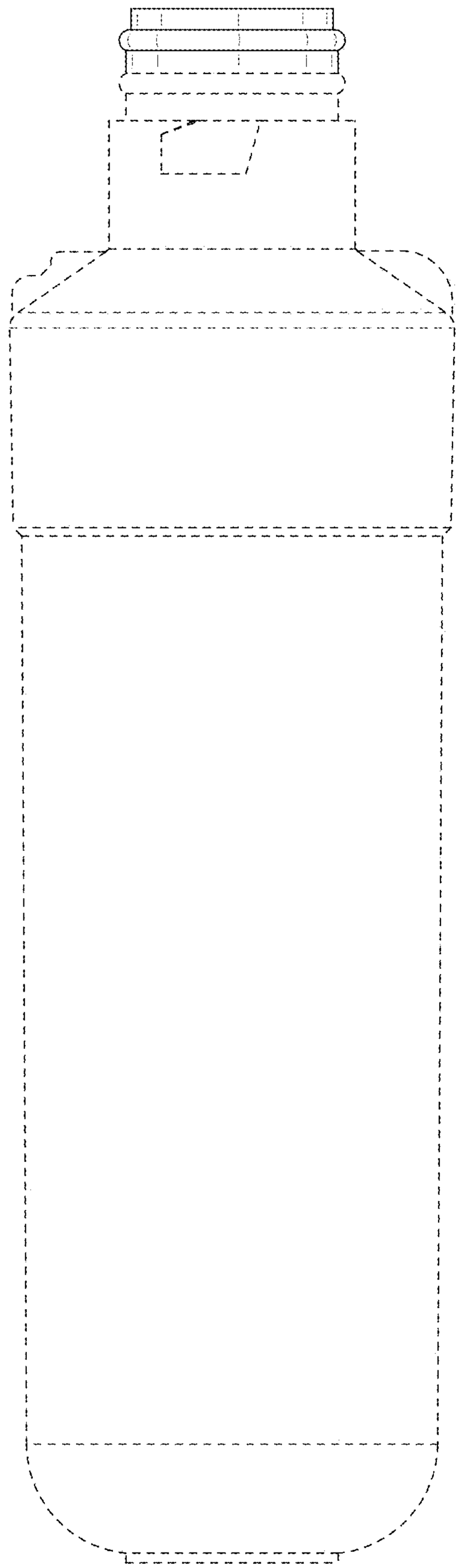

FIG. 26

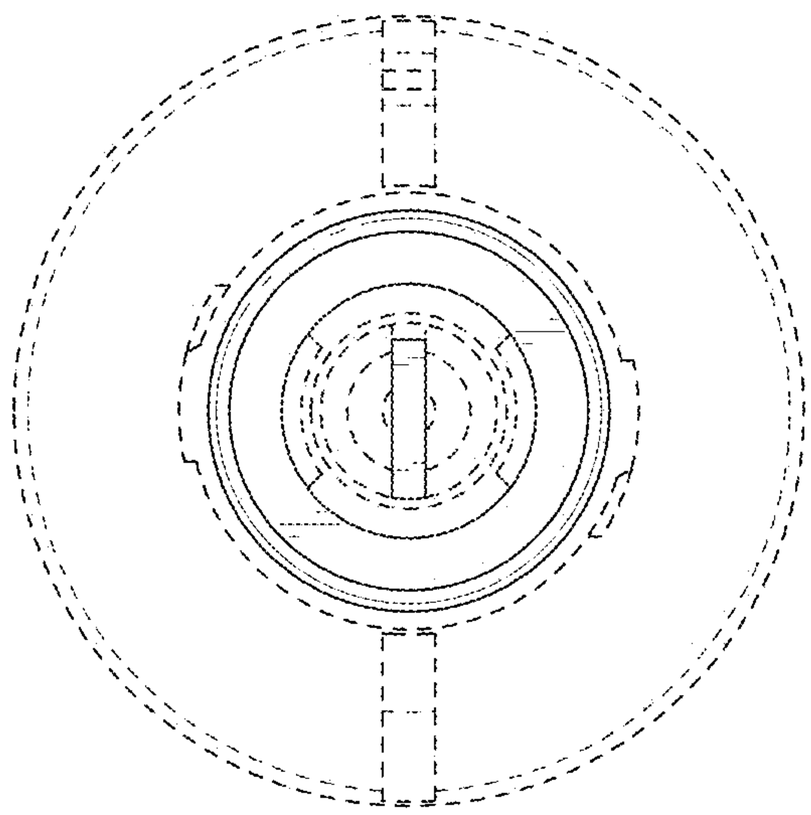

FIG. 27

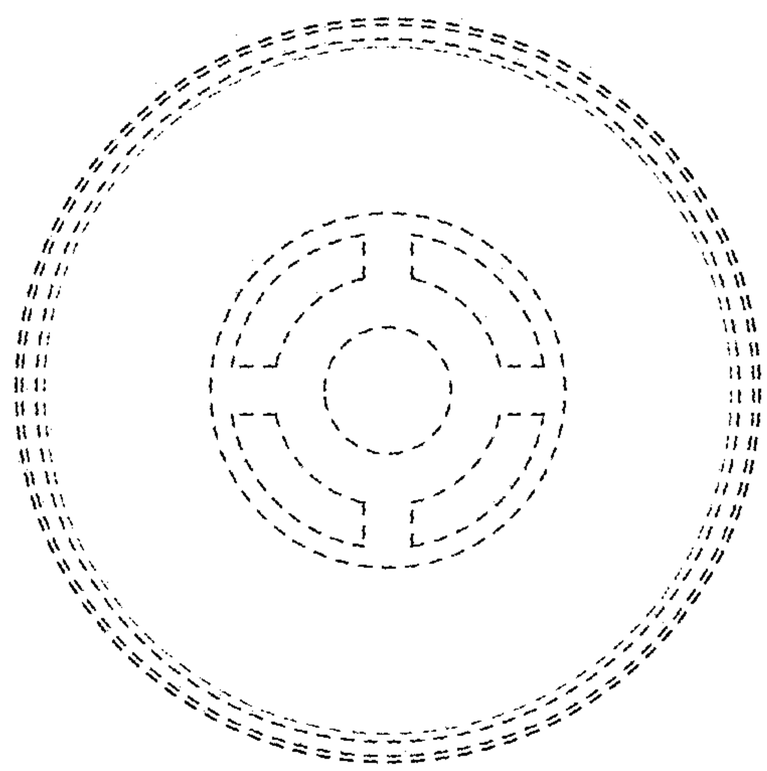

FIG. 28