US00D986468S

(12) United States Design Patent

Velez

(10) Patent No.: US D986,468 S
(45) Date of Patent: ** May 16, 2023

(54) **LIGHT FIXTURE**

(71) Applicant: **HOLLY HUNT ENTERPRISES, INC.**, Chicago, IL (US)

(72) Inventor: **Alberto Velez**, Chicago, IL (US)

(73) Assignee: **HOLLY HUNT ENTERPRISES, INC.**

(**) Term: **15 Years**

(21) Appl. No.: **29/830,931**

(22) Filed: **Mar. 21, 2022**

Related U.S. Application Data

(62) Division of application No. 29/688,604, filed on Apr. 23, 2019, now Pat. No. Des. 950,823.

(51) **LOC (14) Cl.** **26-05**

(52) **U.S. Cl.**
USPC **D26/72**

(58) **Field of Classification Search**
USPC D10/111–115; D26/24, 26, 34, 44, 51, D26/60, 61, 63, 67, 72, 75, 76, 78, 80, D26/84–88, 89, 113, 118, 119, 121, 135, D26/141, 142
CPC F21S 8/00; F21S 8/02; F21S 8/03; F21S 8/04; F21S 8/033; F21S 8/08; F21S 8/036; F21S 8/037; F21S 8/043
See application file for complete search history.

(56) **References Cited**

U.S. PATENT DOCUMENTS

D127,823	S	6/1941	Biller
D130,059	S	10/1941	Herr
2,631,225	A	3/1953	Gadomski
D332,502	S	1/1993	Roos
D403,457	S	12/1998	Walz
D443,945	S	6/2001	Littman
D457,679	S	5/2002	Littman

(Continued)

FOREIGN PATENT DOCUMENTS

EM	007076161-0003	10/2019

OTHER PUBLICATIONS

Omni_LED_Lindoor.Outdoor_wall_sconce (available online) Retrieved from the internet Jul. 6, 2021 from URL: https://www.lumens.com/omni-led-indoor-outdoor-wall-sconce-by-modern-forms-MFMP90914.html.

(Continued)

Primary Examiner — Richard Kearney
(74) *Attorney, Agent, or Firm* — The Belles Group, P.C.

(57) **CLAIM**

The ornamental design for a light fixture, as shown and described.

DESCRIPTION

FIG. **1** is a front perspective view of a light fixture according to a first embodiment of the new design;
FIG. **2** is a rear perspective view thereof;
FIG. **3** is a front view thereof;
FIG. **4** is a rear view thereof;
FIG. **5** is a right side view thereof,
FIG. **6** is a left side view thereof;
FIG. **7** is a top view thereof;
FIG. **8** is a bottom view thereof;
FIG. **9** is a front perspective view of a light fixture according to a second embodiment of the new design;
FIG. **10** is a rear perspective view thereof;
FIG. **11** is a front view thereof;
FIG. **12** is a rear view thereof;
FIG. **13** is a right side view thereof,
FIG. **14** is a left side view thereof;
FIG. **15** is a top view thereof; and,
FIG. **16** is a bottom view thereof.
The broken lines in the drawings illustrate portions of the light fixture that form no part of the claimed design.

1 Claim, 14 Drawing Sheets

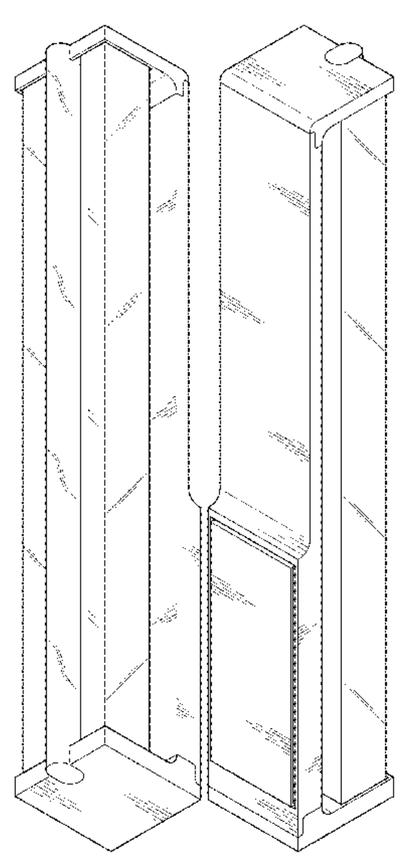

(56) **References Cited**

U.S. PATENT DOCUMENTS

D498,866	S		11/2004	Keller
D498,867	S		11/2004	Keller
D520,667	S		5/2006	Jae-Sung et al.
D586,493	S		2/2009	Parres
D589,194	S		3/2009	Sabernig
D604,447	S		11/2009	Klaus
D689,646	S		9/2013	Nankil
D689,647	S		9/2013	Brott et al.
D750,308	S		2/2016	Rodgers et al.
D760,417	S		6/2016	Benensohn
D783,879	S		4/2017	Dolan
D796,107	S		8/2017	Boorom et al.
D855,238	S		7/2019	Stanley
D901,061	S		11/2020	Stanley
D926,345	S	*	7/2021	Gallo, Jr. D26/72
11,060,708	B2	*	7/2021	Chen F21V 21/15
D930,888	S	*	9/2021	Sonneman D26/113
11,313,525	B2	*	4/2022	Hollander F21V 19/04
D950,823	S	*	5/2022	Velez D26/72

OTHER PUBLICATIONS

Double Axis LED Wall Scone (available online) Retrieved from the internet Jul. 6, 2021 from URL https://www.lumens.com/ . . . sconce&dwvar_uu563444_AttrValue1=Vintage%20Platinum#q=sconce&sz=96&srule=&start=760&tilelndex=86[Jul. 6, 2021.

Kori Sconce (available online) Retrieved from the internet Jul. 6, 2021 from URL: https://www.hollyhunt.com/product/kori-scone.

U.S. Appl. No. 29/688,604, filed Apr. 23, 2019.

* cited by examiner

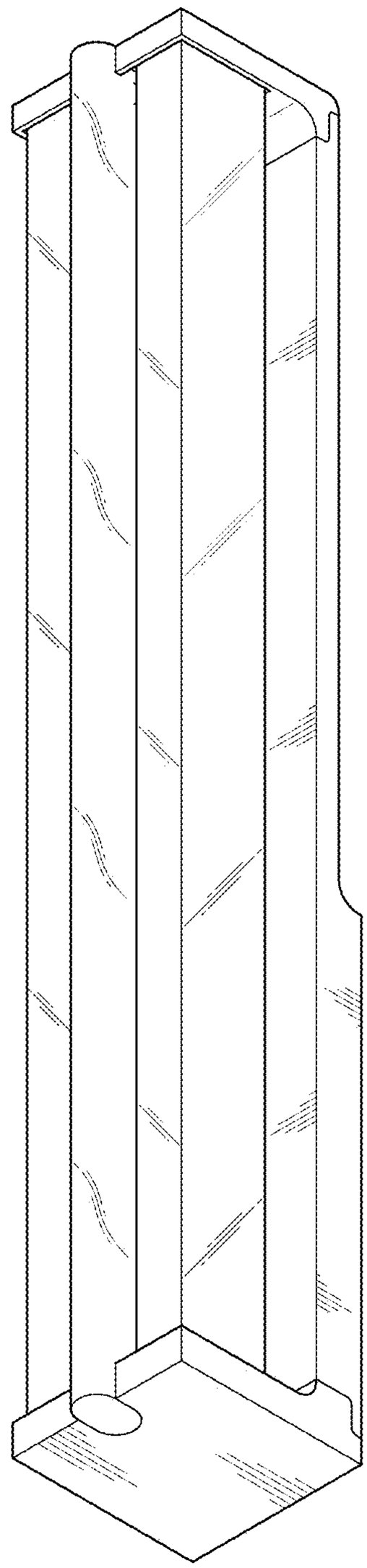

FIG. 1

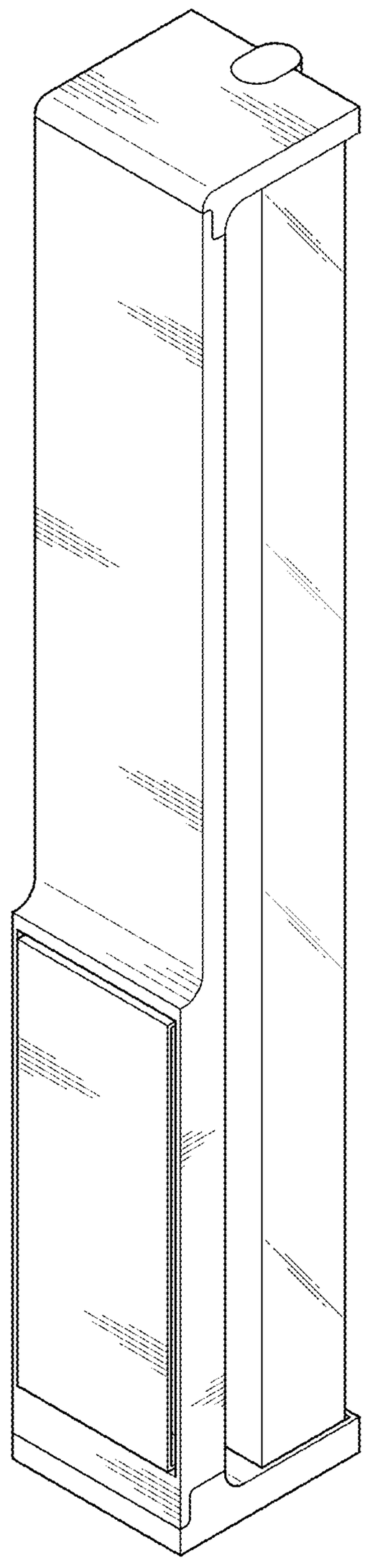

FIG. 2

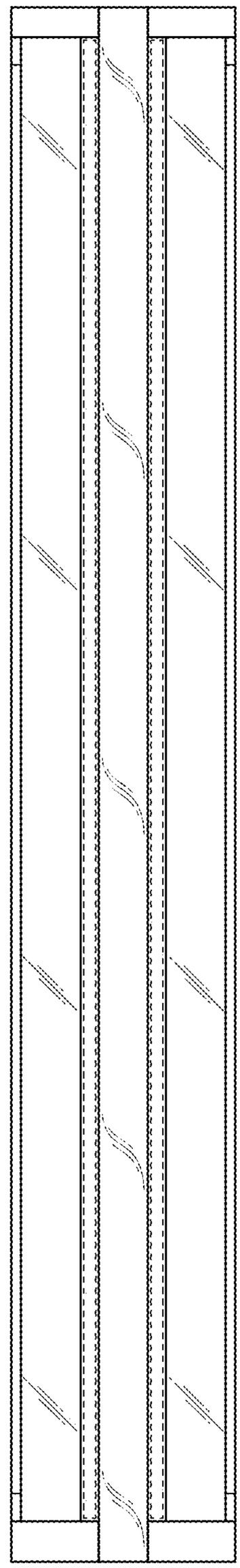

FIG. 3

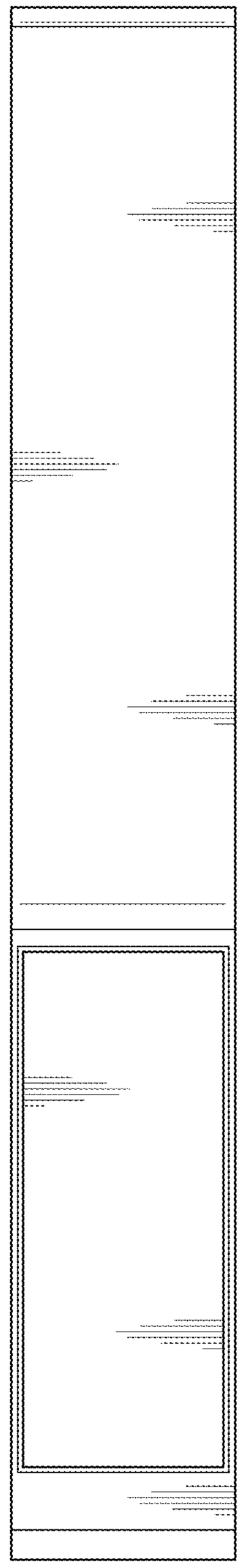

FIG. 4

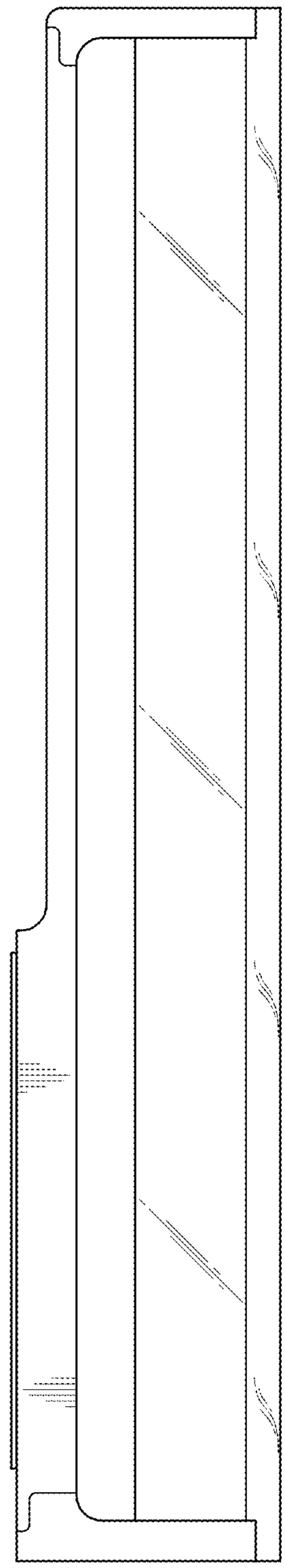

FIG. 5

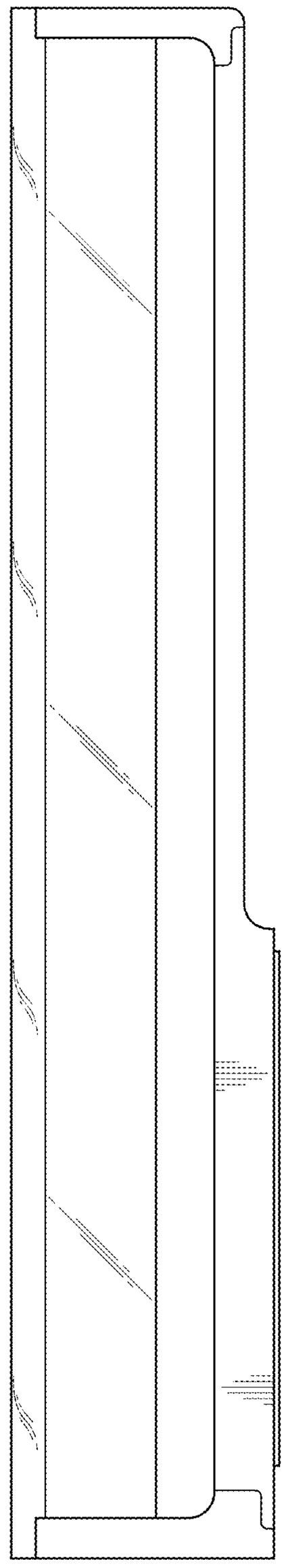

FIG. 6

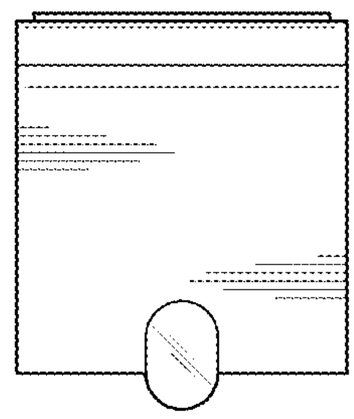

FIG. 7

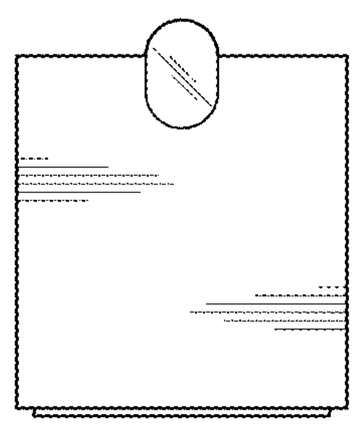

FIG. 8

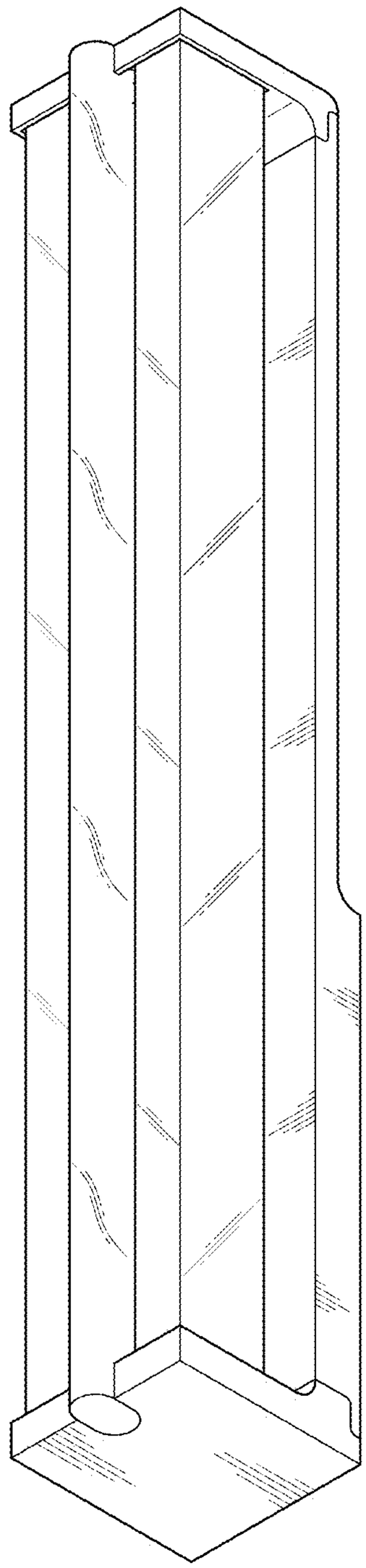

FIG. 9

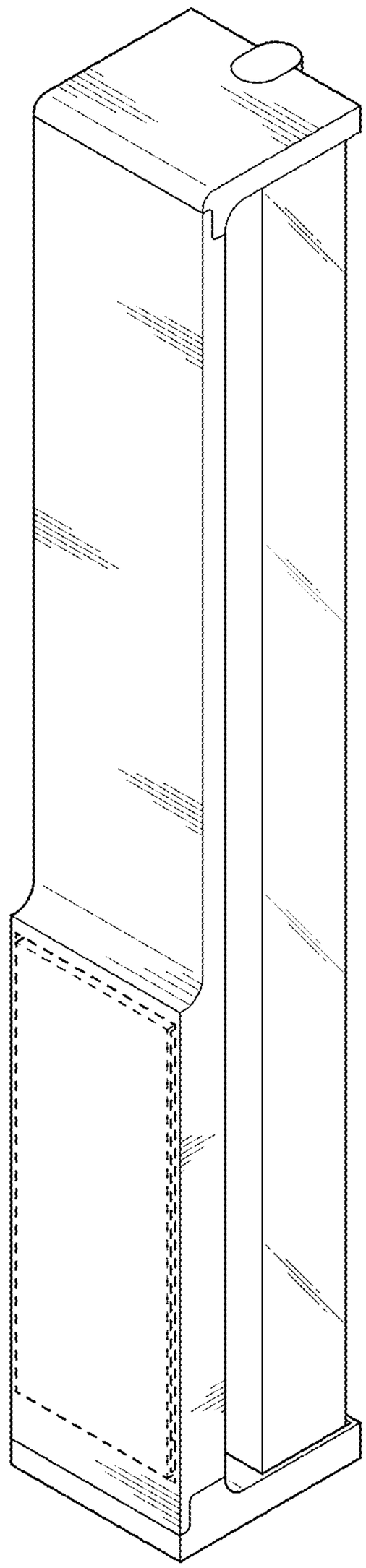

FIG. 10

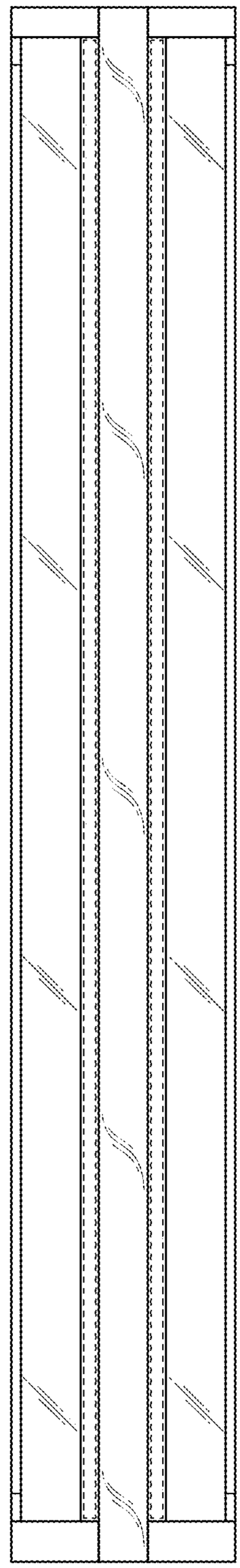

FIG. 11

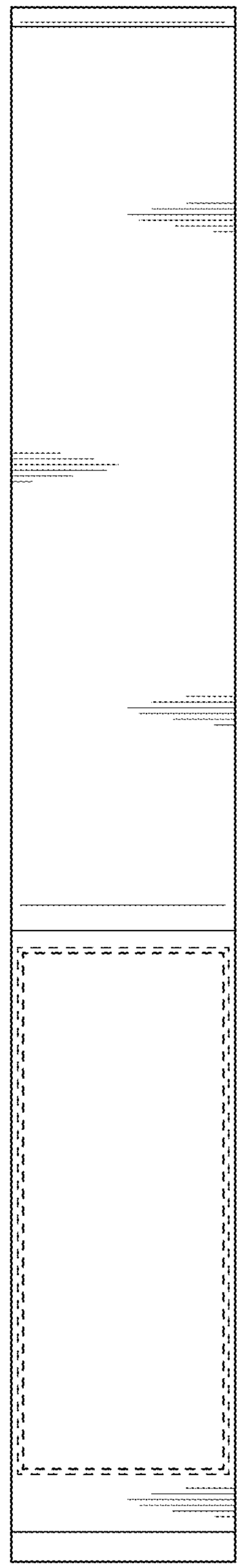

FIG. 12

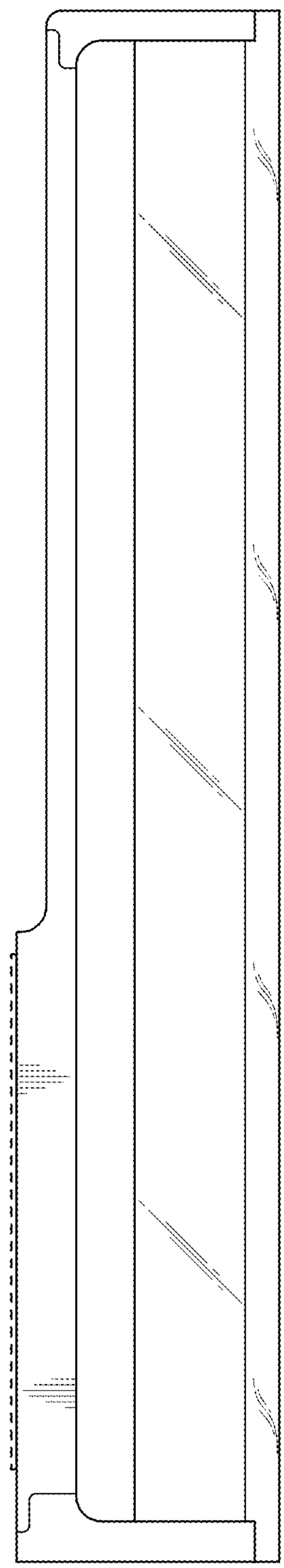

FIG. 13

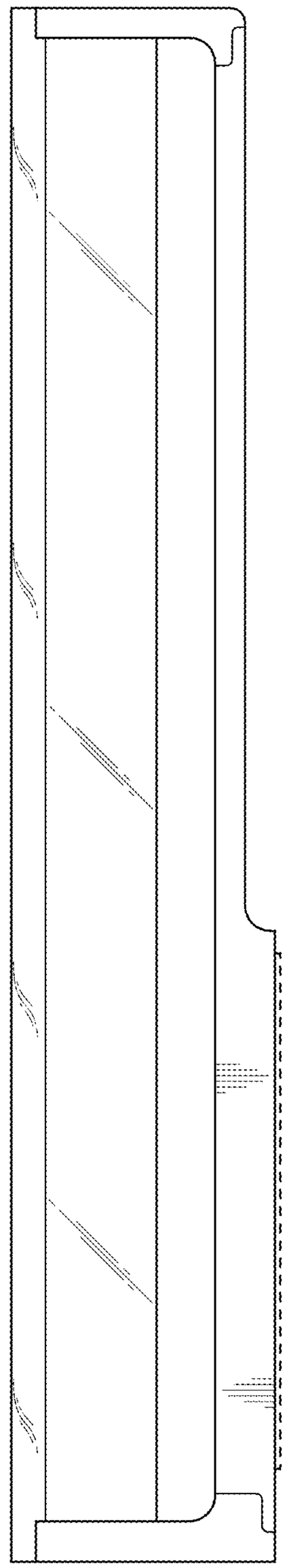

FIG. 14

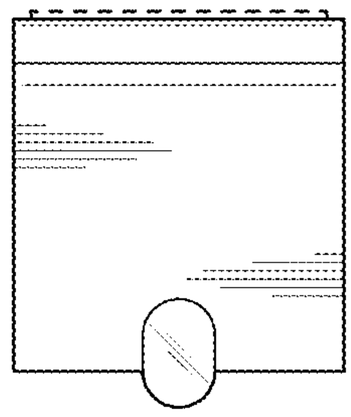

FIG. 15

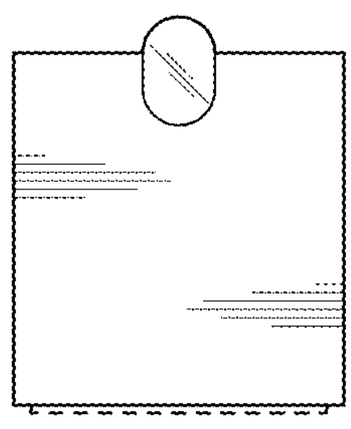

FIG. 16