US00D986442S

(12) United States Design Patent

Hu

(10) Patent No.: US D986,442 S
(45) Date of Patent: ** May 16, 2023

(54) **SLIDER AND LADDER ASSEMBLY**

(71) Applicant: **Lanhui Hu**, Ji'an (CN)

(72) Inventor: **Lanhui Hu**, Ji'an (CN)

(**) Term: **15 Years**

(21) Appl. No.: **29/885,337**

(22) Filed: **Feb. 23, 2023**

Related U.S. Application Data

(63) Continuation-in-part of application No. 29/831,724, filed on Mar. 22, 2022.

(51) **LOC (14) Cl.** **25-04**

(52) **U.S. Cl.**
USPC **D25/64**; D21/826

(58) **Field of Classification Search**
USPC D21/826, 814, 811; D25/64, 63; 182/27, 182/152, 20, 35
CPC E06C 1/32; A63B 9/00
See application file for complete search history.

(56) **References Cited**

U.S. PATENT DOCUMENTS

212,050 A * 2/1879 Phillips E06C 1/32 182/27
316,643 A * 4/1885 Niehaus E06C 1/16 182/27
579,437 A * 3/1897 Knisell E06C 1/39 182/27
737,080 A * 8/1903 Conner E06C 1/32 182/27
2,012,592 A * 8/1935 Skiba E06C 1/32 182/27
2,312,148 A * 2/1943 Cederquist E06C 1/005 182/27
3,008,711 A * 11/1961 Dillon A63B 9/00 D21/826
3,547,435 A * 12/1970 Scott A63B 9/00 482/37
3,572,698 A * 3/1971 Greenly A63B 9/00 482/36
3,897,055 A * 7/1975 Caldow A63B 9/00 482/36
4,365,799 A * 12/1982 O'Brian A63G 21/00 182/27
4,493,392 A * 1/1985 Alimbau Marques E06C 1/56 182/27
4,519,476 A * 5/1985 Alimbau Marques E06C 1/56 182/35

(Continued)

Primary Examiner — Cynthia R Underwood
(74) *Attorney, Agent, or Firm* — Daniel M. Cohn; Howard M. Cohn

(57) **CLAIM**

The ornamental design for a slider and ladder assembly, as shown and described.

DESCRIPTION

FIG. **1** is a perspective view of a slider and ladder assembly showing my new design;
FIG. **2** is another perspective view thereof;
FIG. **3** is a front elevational view thereof;
FIG. **4** is a rear elevational view thereof;
FIG. **5** is a left side elevational view thereof;
FIG. **6** is a right side elevational view thereof;
FIG. **7** is a top plan view thereof;
FIG. **8** is a bottom plan view thereof;
FIG. **9** is the first use state diagram;
FIG. **10** is the second use state diagram;
FIG. **11** is the third use state diagram;
FIG. **12** is the fourth use state diagram;
FIG. **13** is the fifth use state diagram; and,
FIG. **14** is the sixth use state diagram.
The dash-dash broken lines in the drawings depict portions of the slider and ladder assembly that form no part of the claimed design.

1 Claim, 14 Drawing Sheets

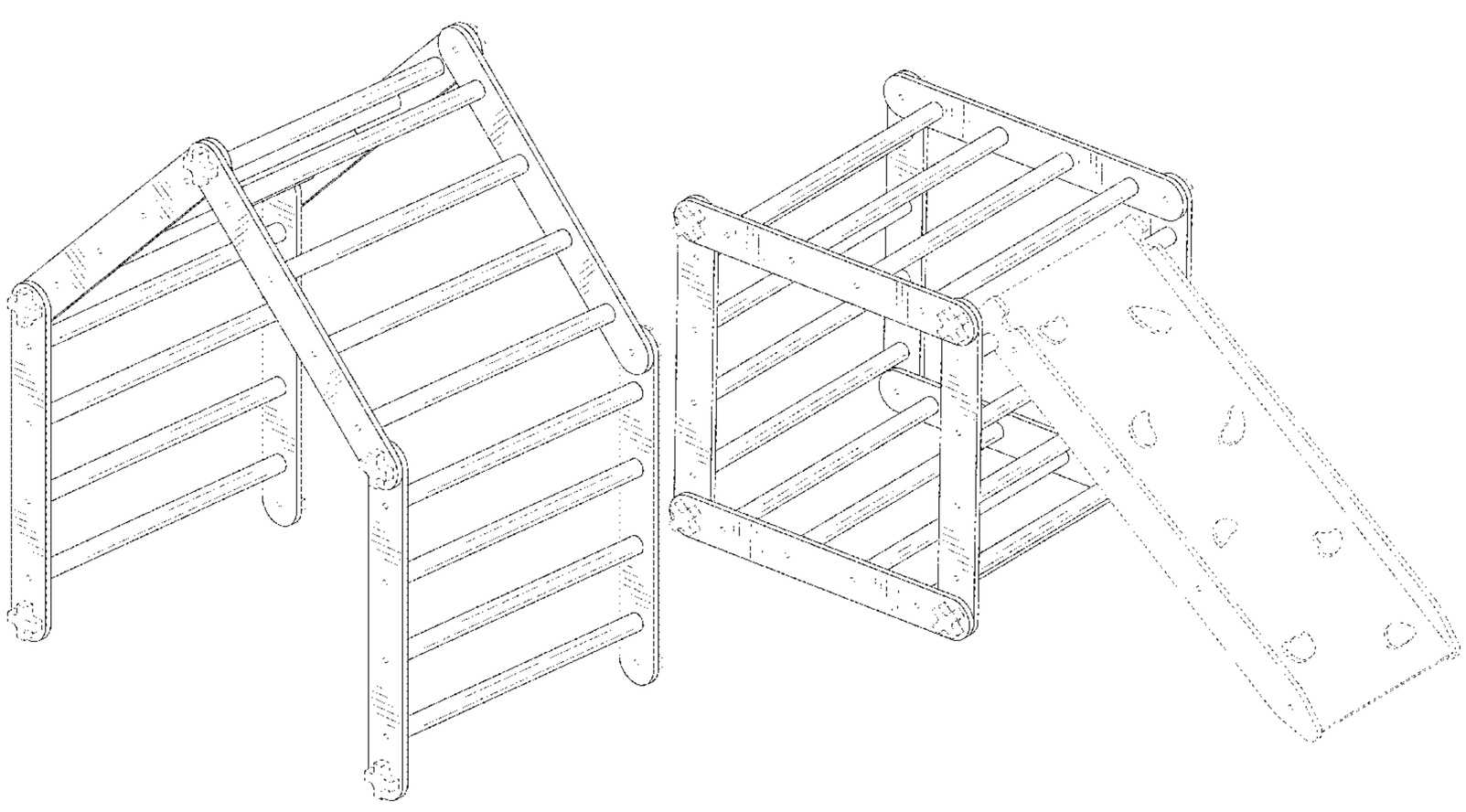

(56) **References Cited**

U.S. PATENT DOCUMENTS

4,630,819	A	*	12/1986	Levin	A63B 9/00 182/152
4,804,176	A	*	2/1989	Goble	A47B 83/02 472/106
5,086,872	A	*	2/1992	Lin	E06C 1/32 182/20
5,368,126	A	*	11/1994	Woodward	E04G 1/20 182/152
D410,271	S	*	5/1999	Manus	D21/826
D411,604	S	*	6/1999	Manus	D21/826
D478,144	S	*	8/2003	Fredriksson	D21/826
D483,089	S	*	12/2003	Johnson	D21/818
7,007,344	B2	*	3/2006	Lee	E06C 1/32 403/68
8,381,873	B2	*	2/2013	Cross	E06C 1/39 182/27
9,320,955	B2	*	4/2016	Aral Diaz	E06C 1/32
D771,763	S		11/2016	Hamons et al.	
D832,966	S	*	11/2018	Nelson	D21/818
D847,287	S		4/2019	Chen	
D952,784	S	*	5/2022	Xiang	D21/826
D966,556	S	*	10/2022	Barker	D25/64
D973,822	S	*	12/2022	Klein	D21/826
11,548,595	B2	*	1/2023	Schaub	B63B 27/146
2023/0062245	A1	*	3/2023	Fletcher	B65D 90/20
2023/0067327	A1	*	3/2023	Fletcher	B65D 90/48

* cited by examiner

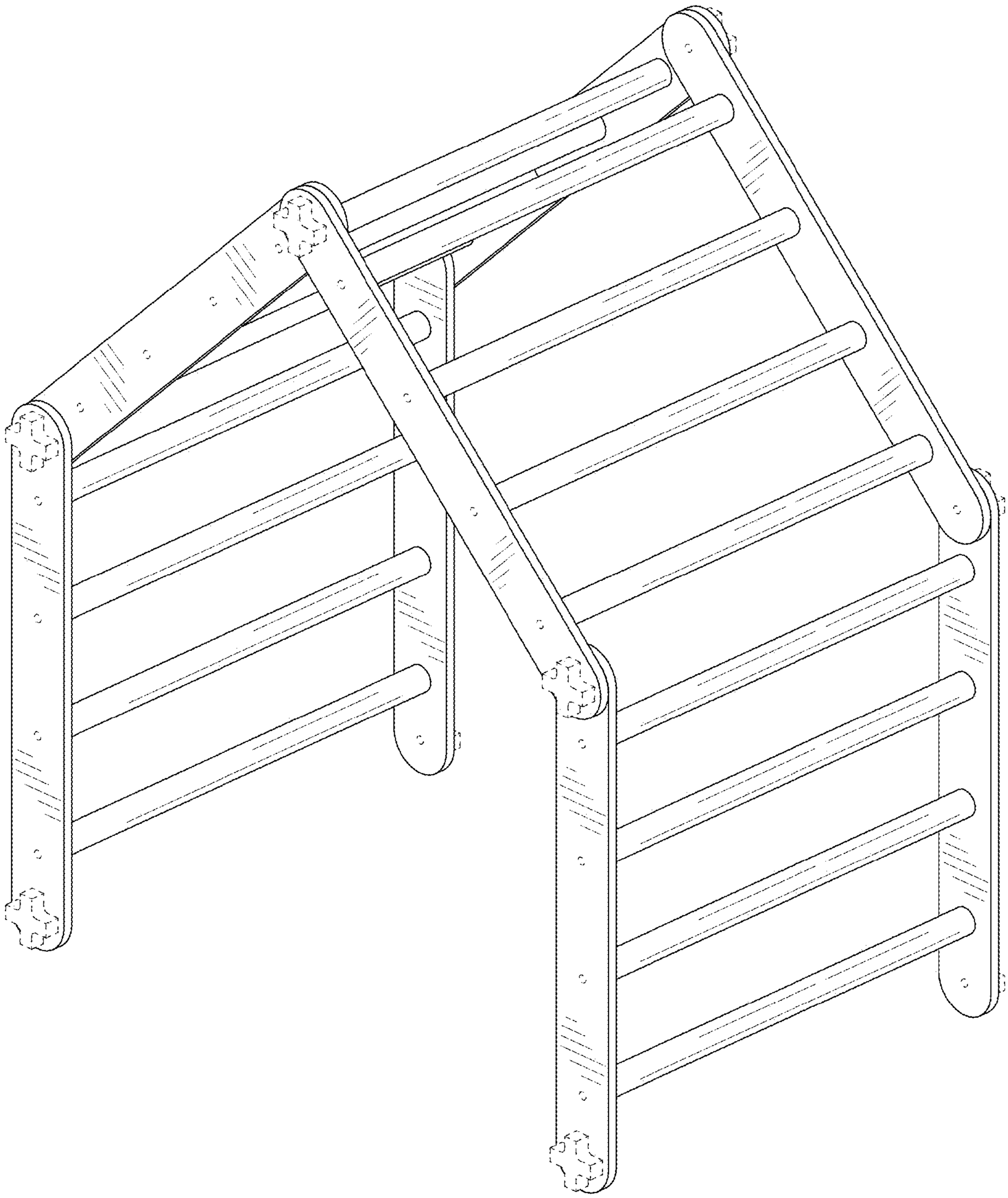

FIG. 1

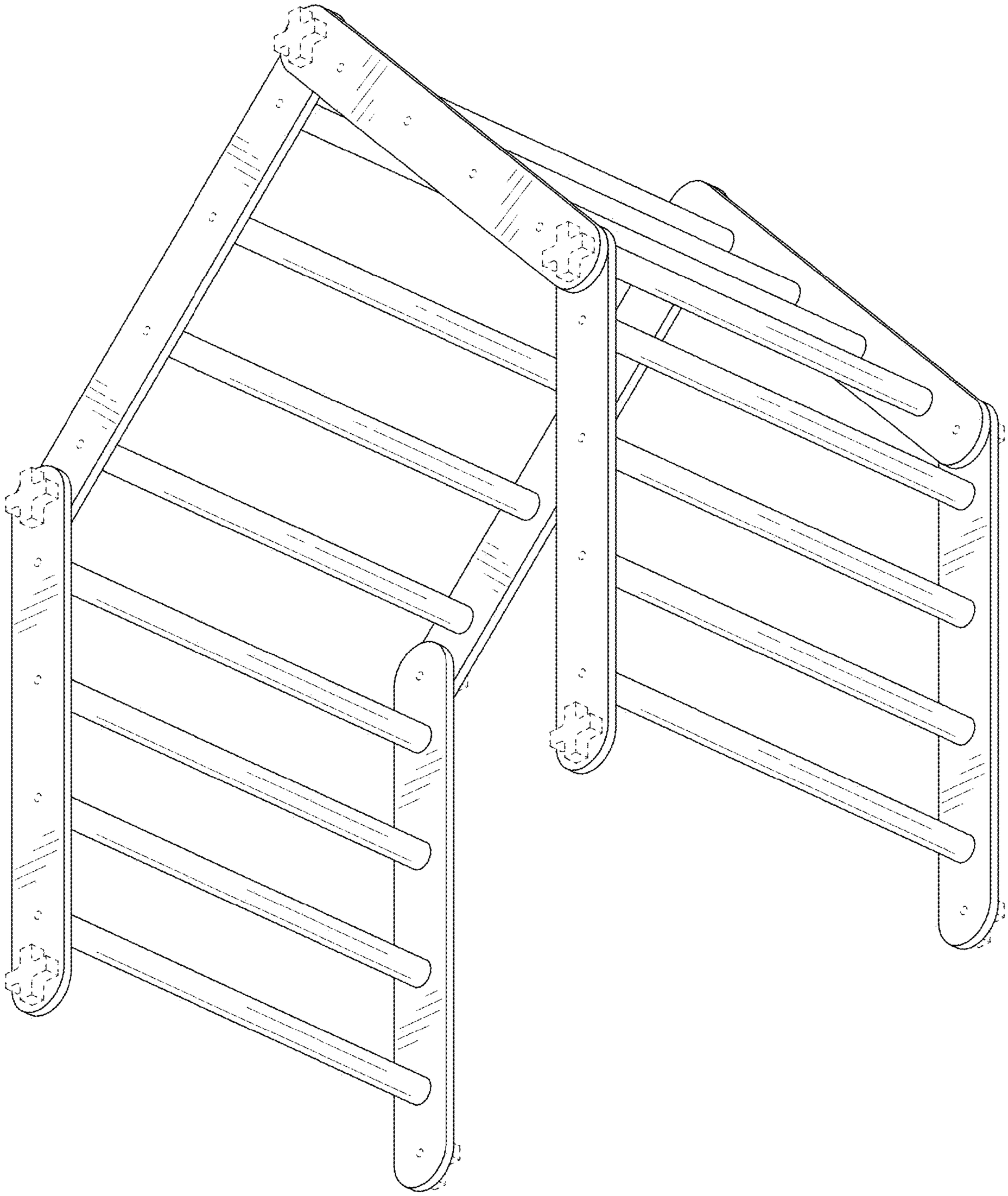

FIG. 2

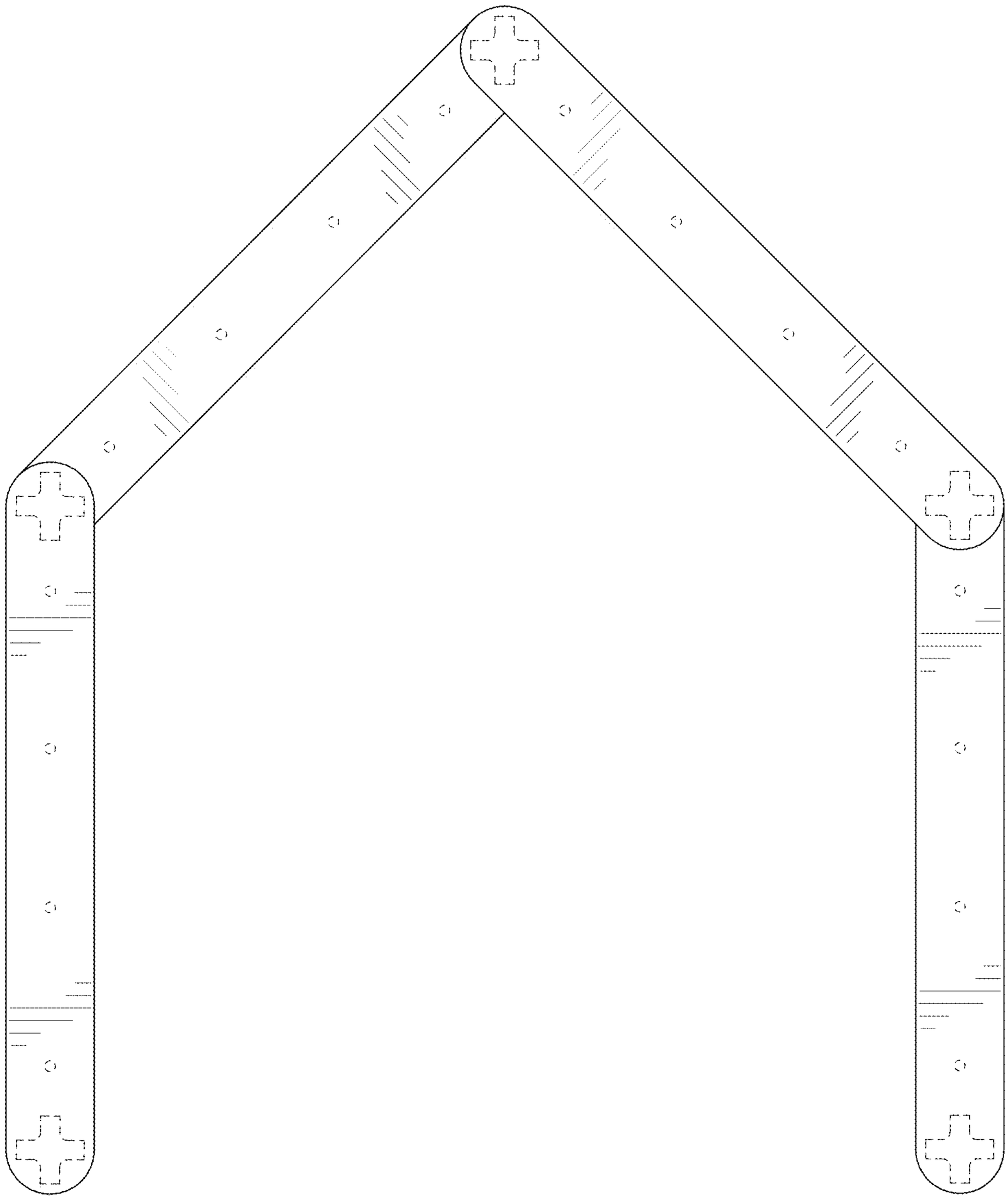

FIG. 3

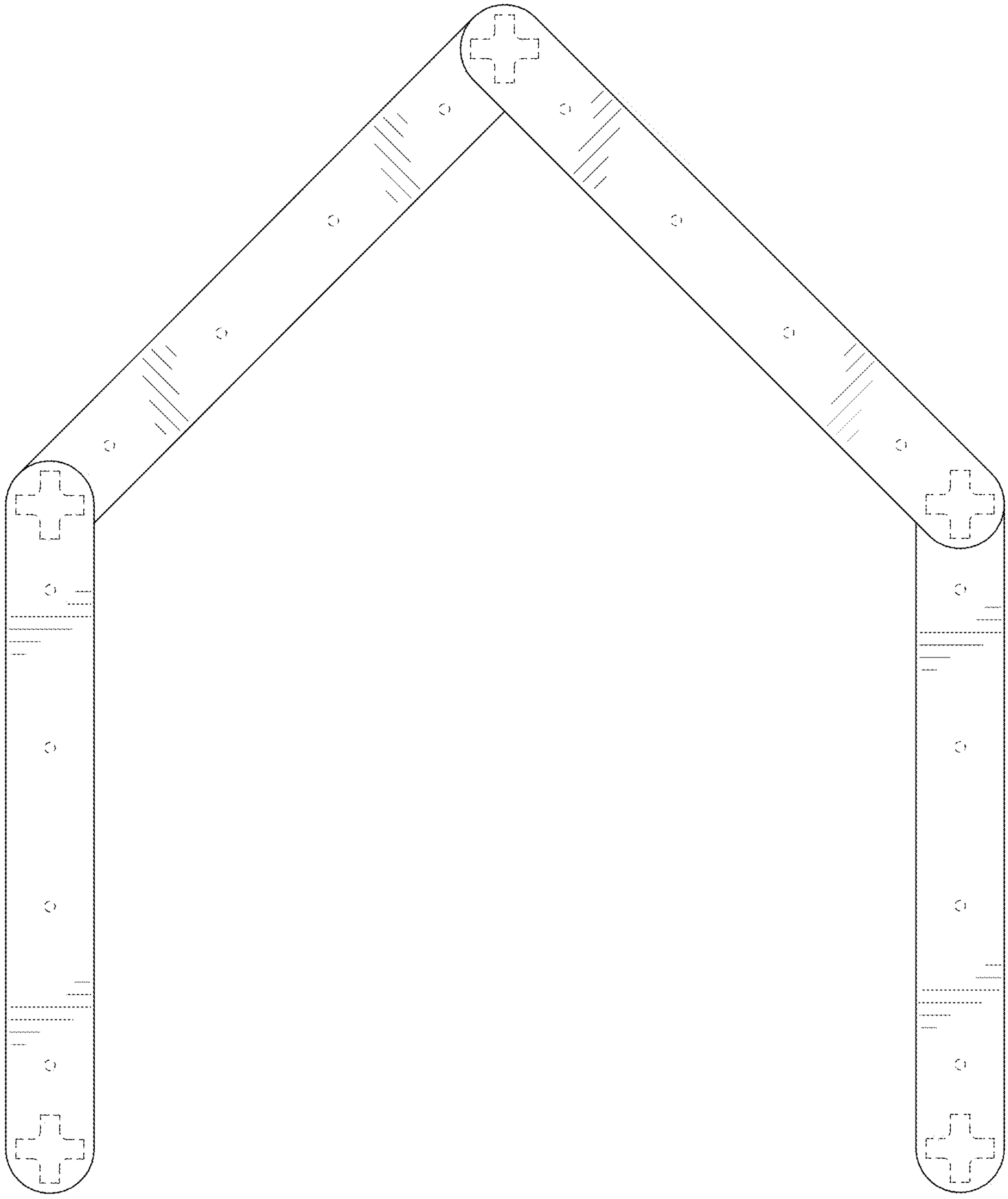

FIG. 4

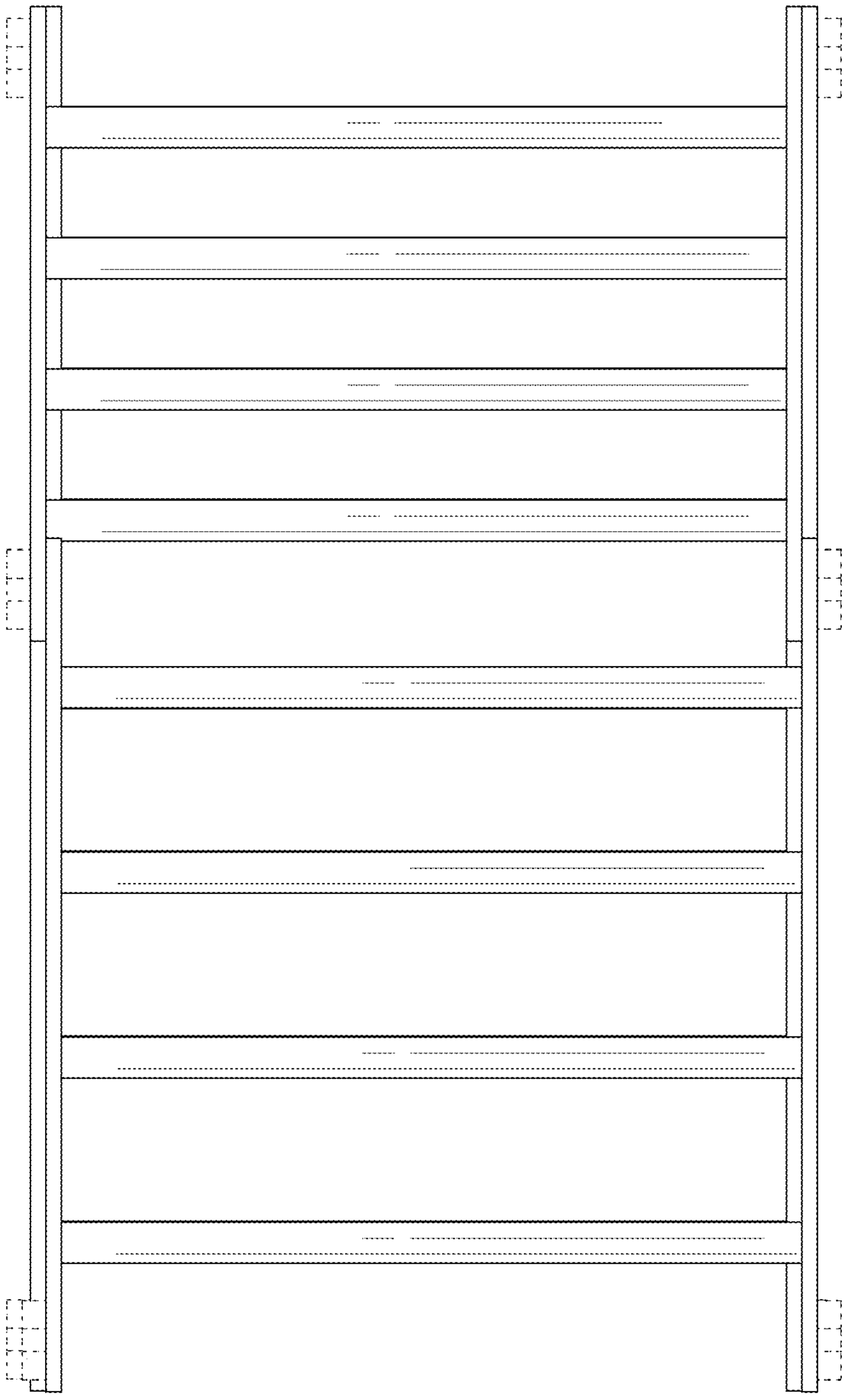

FIG. 5

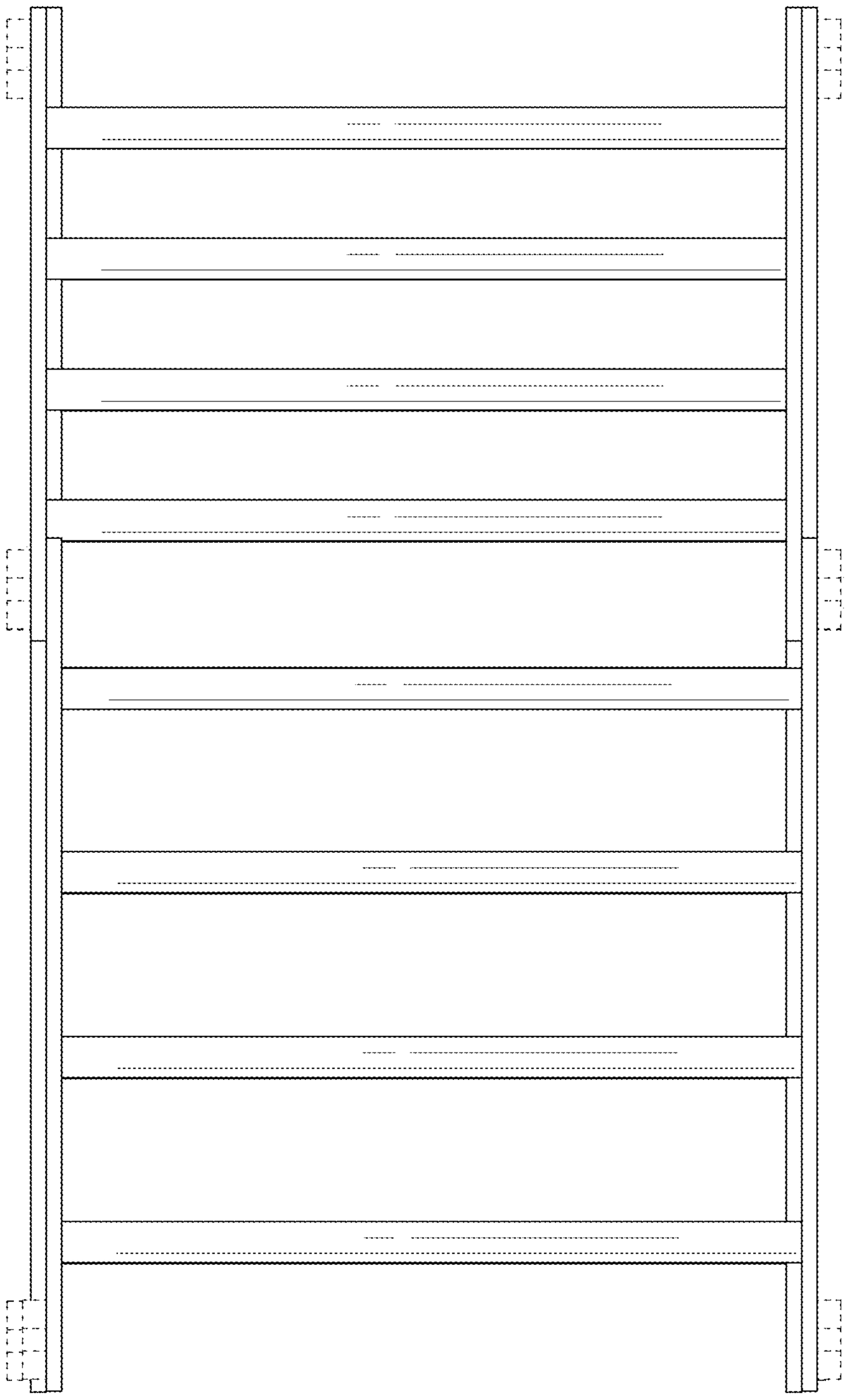

FIG. 6

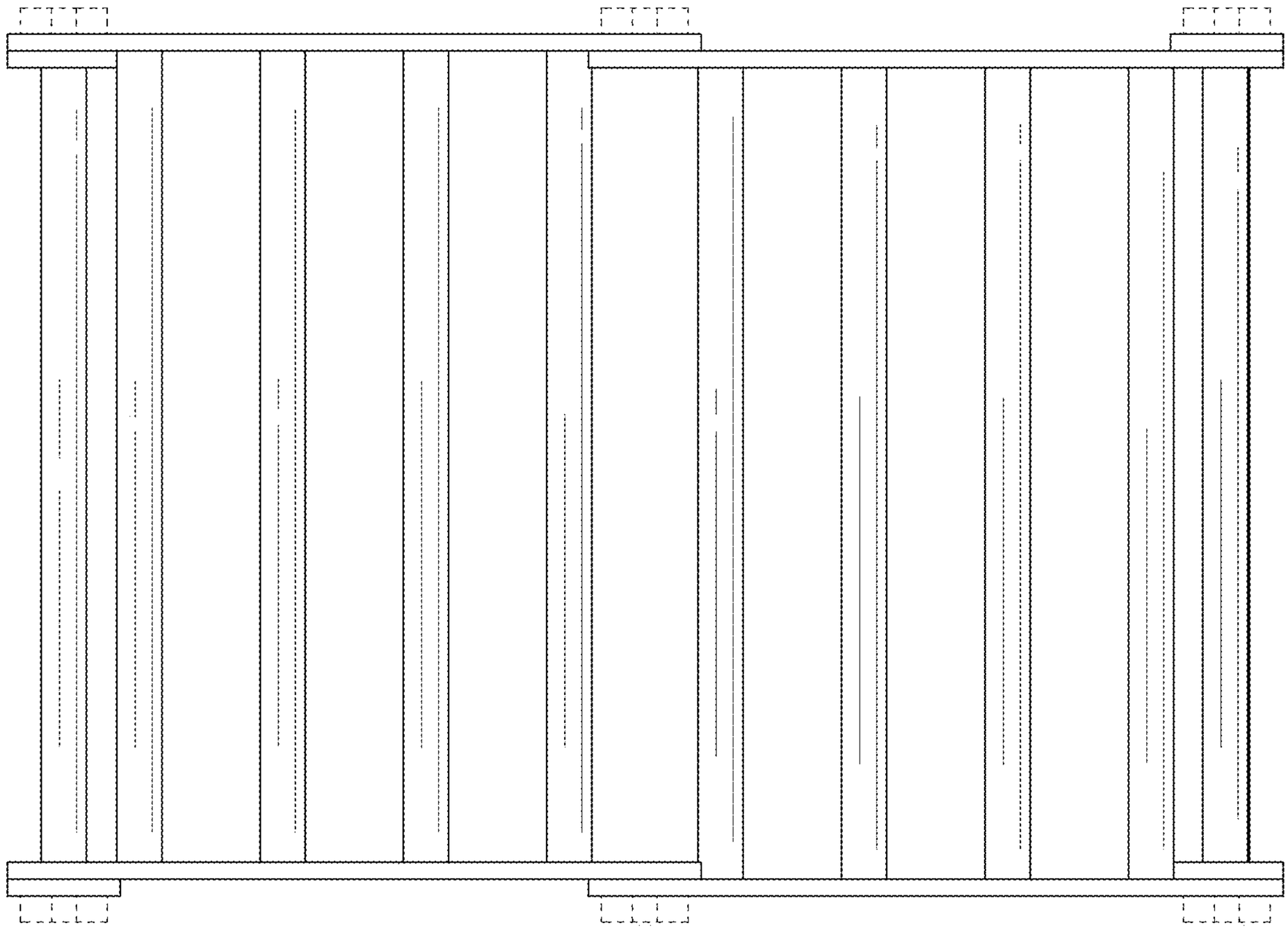

FIG. 7

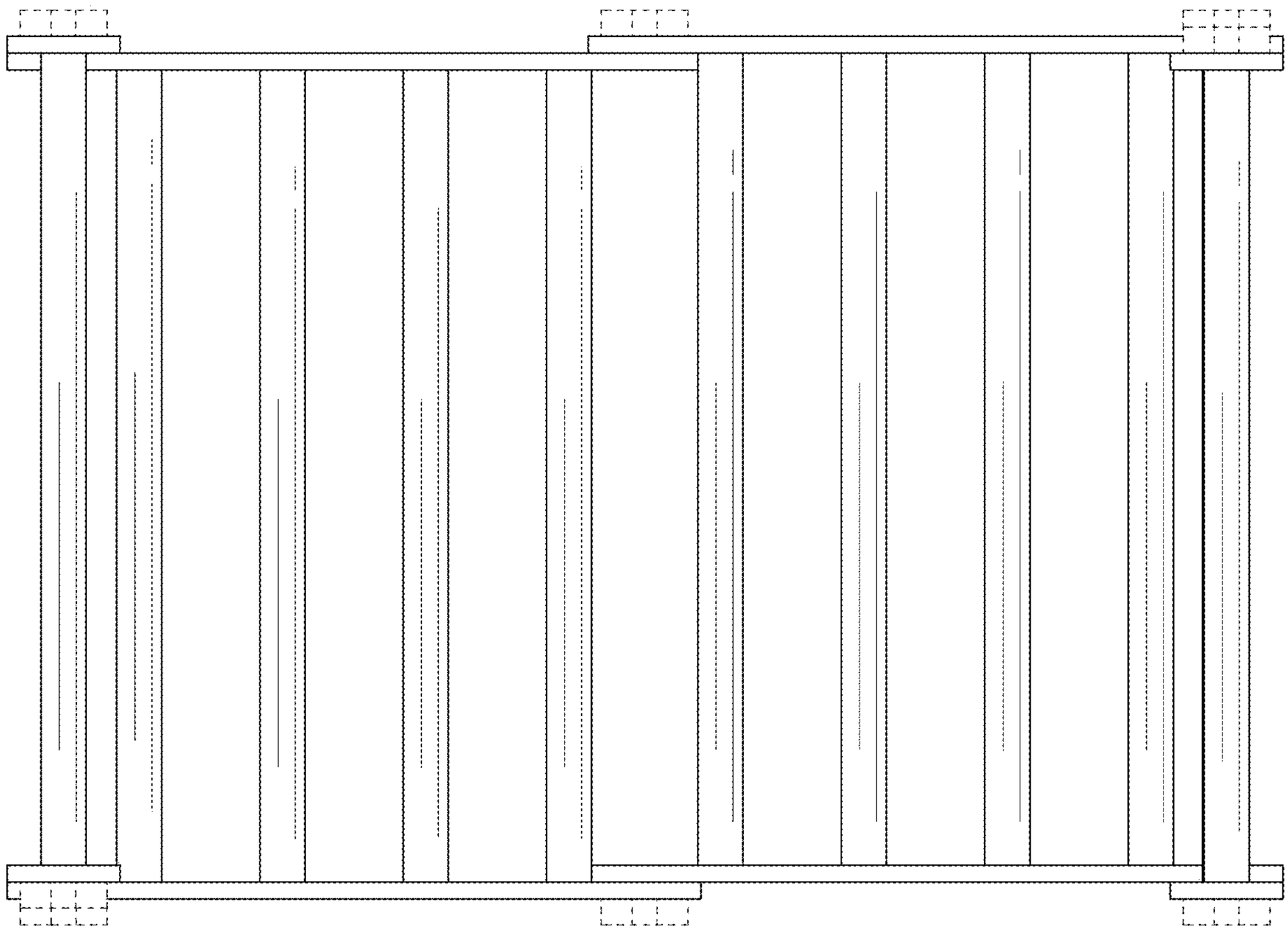

FIG. 8

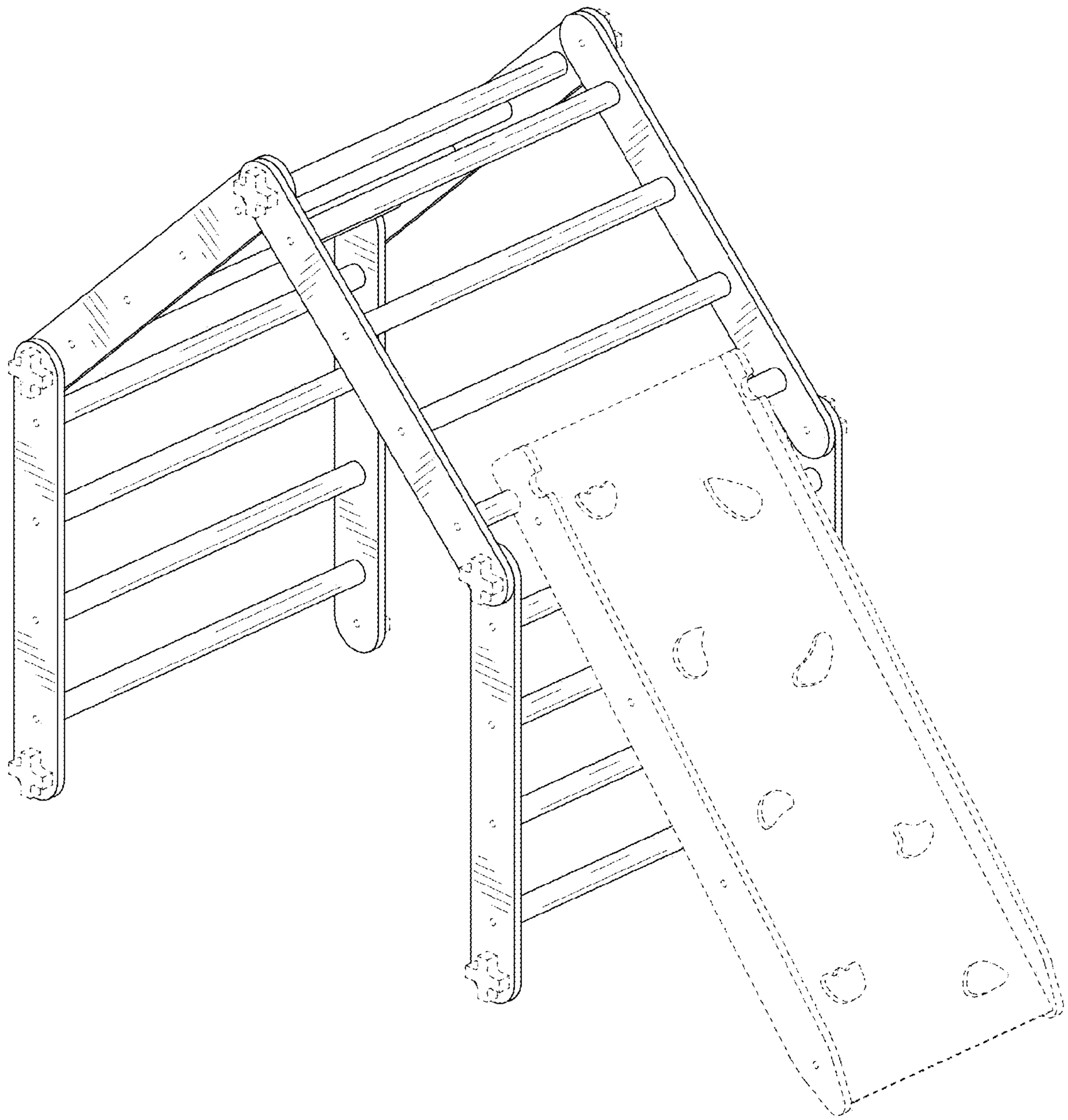

FIG. 9

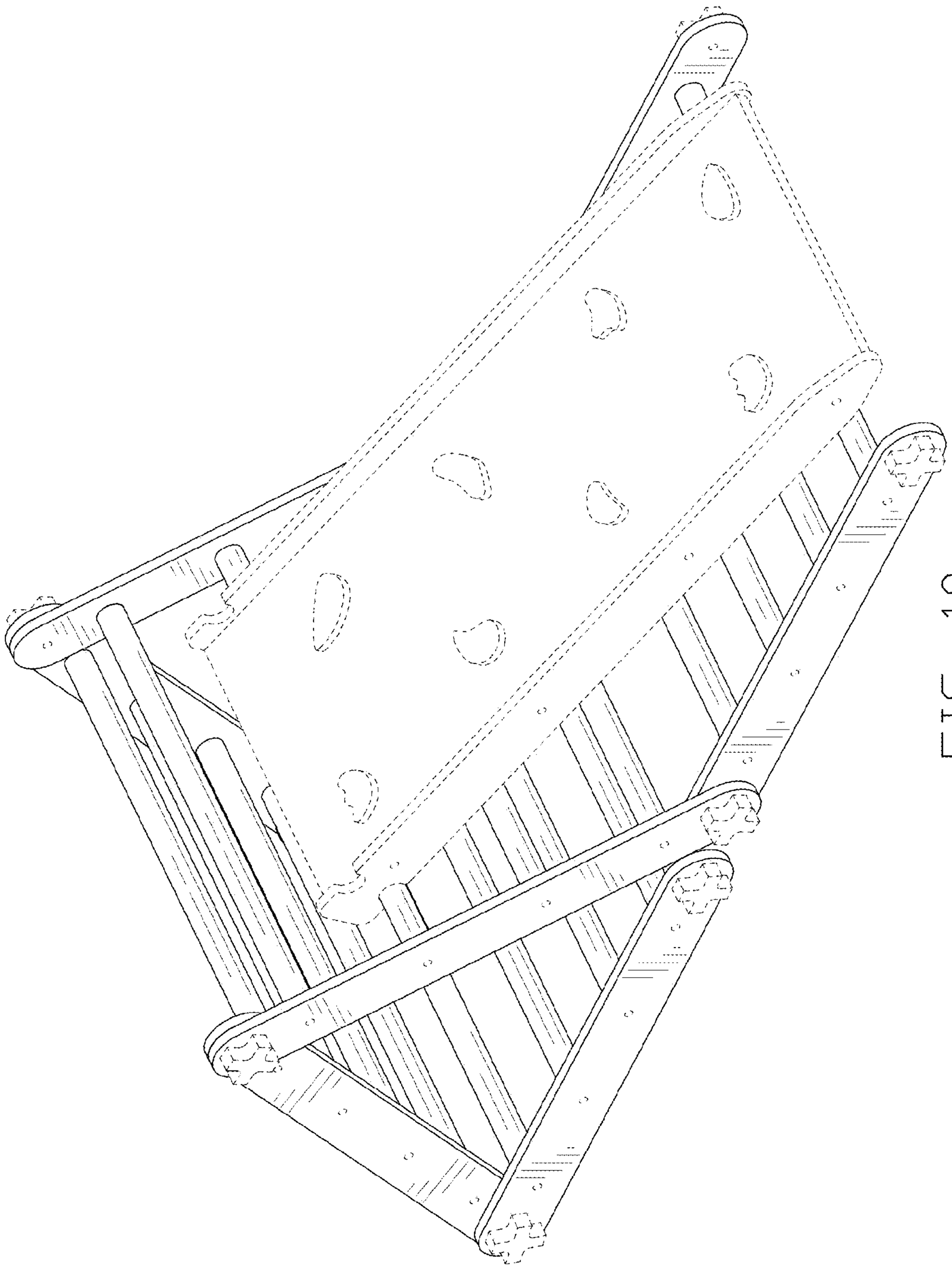

FIG. 10

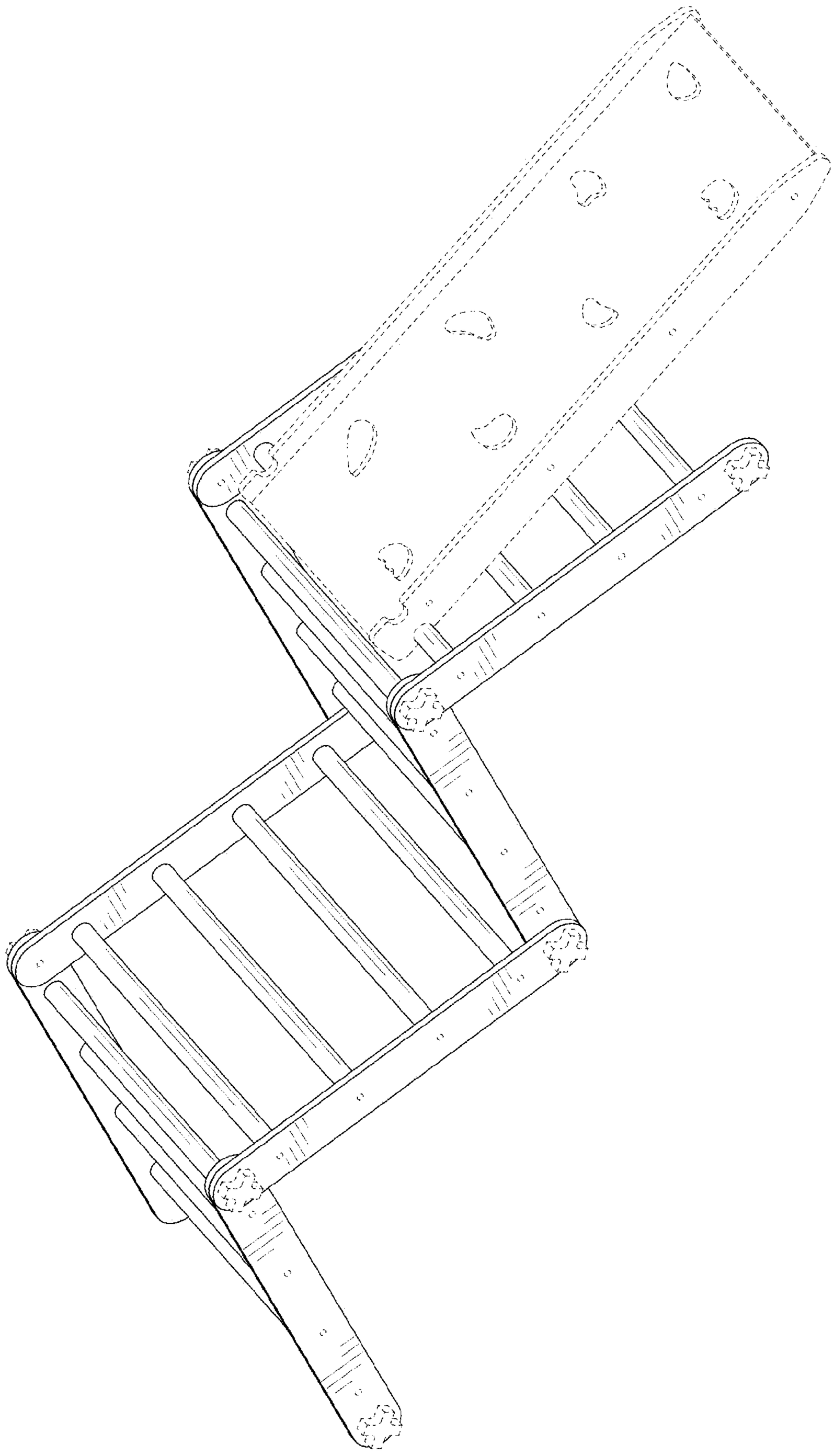

FIG. 11

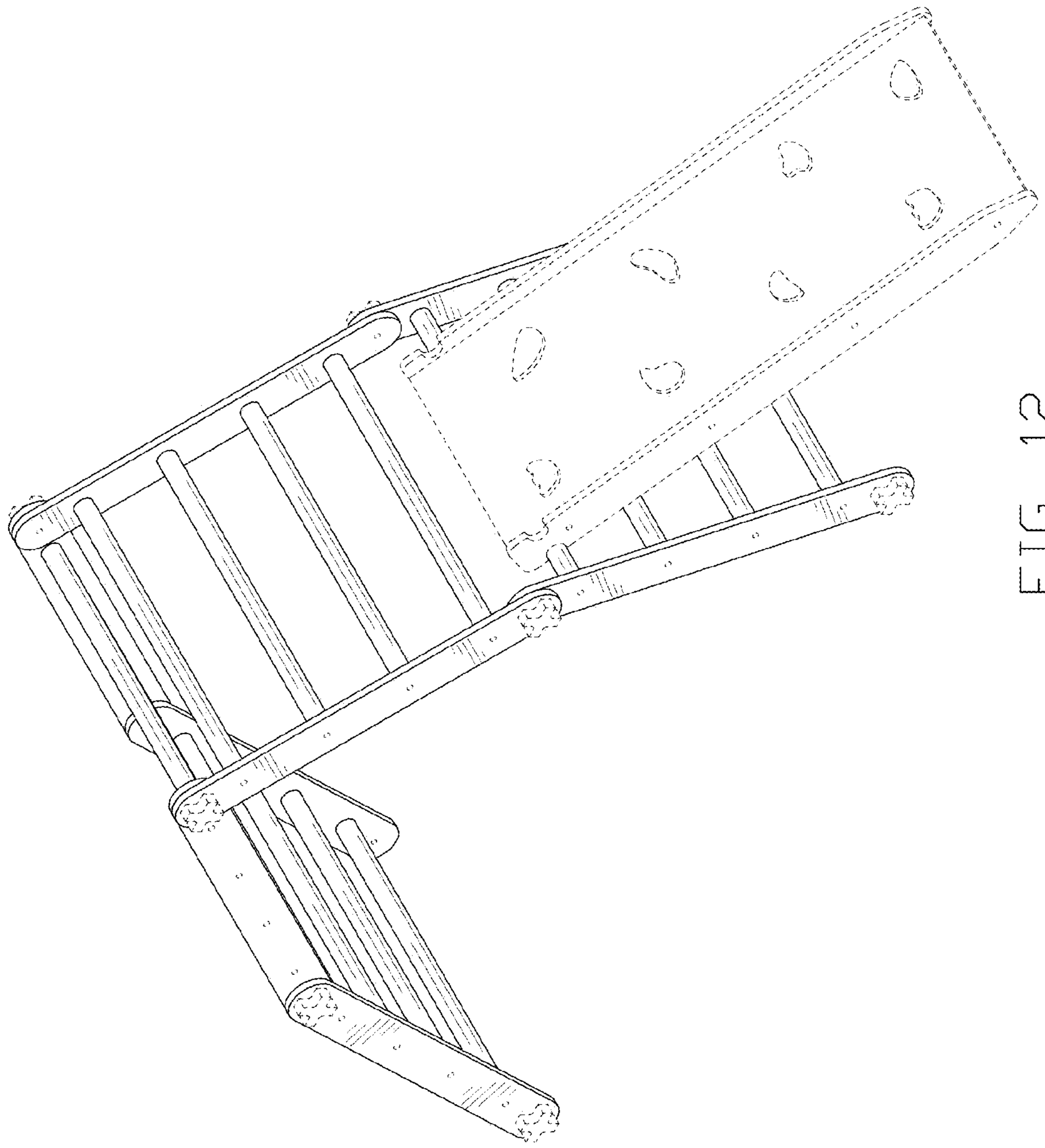

FIG. 12

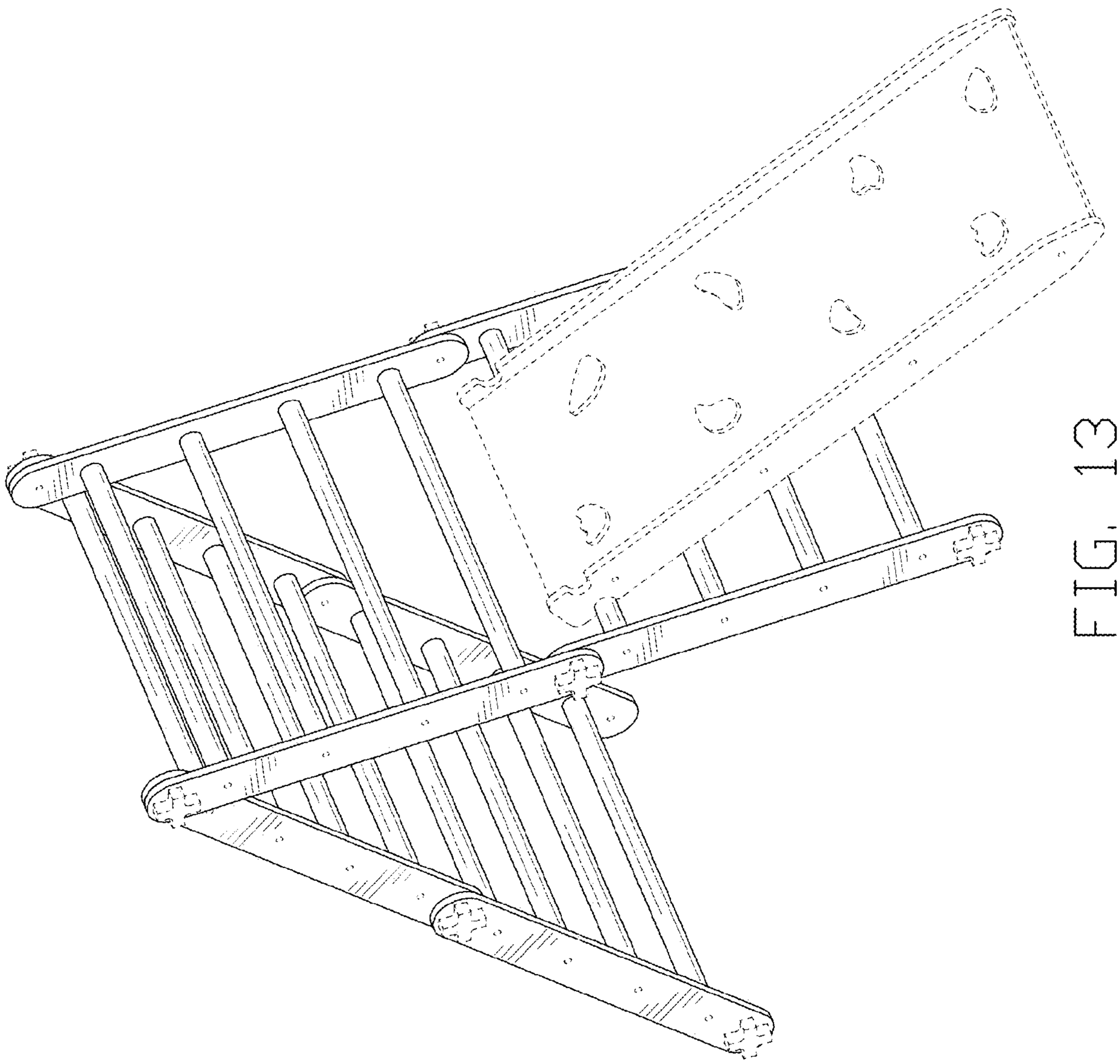

FIG. 13

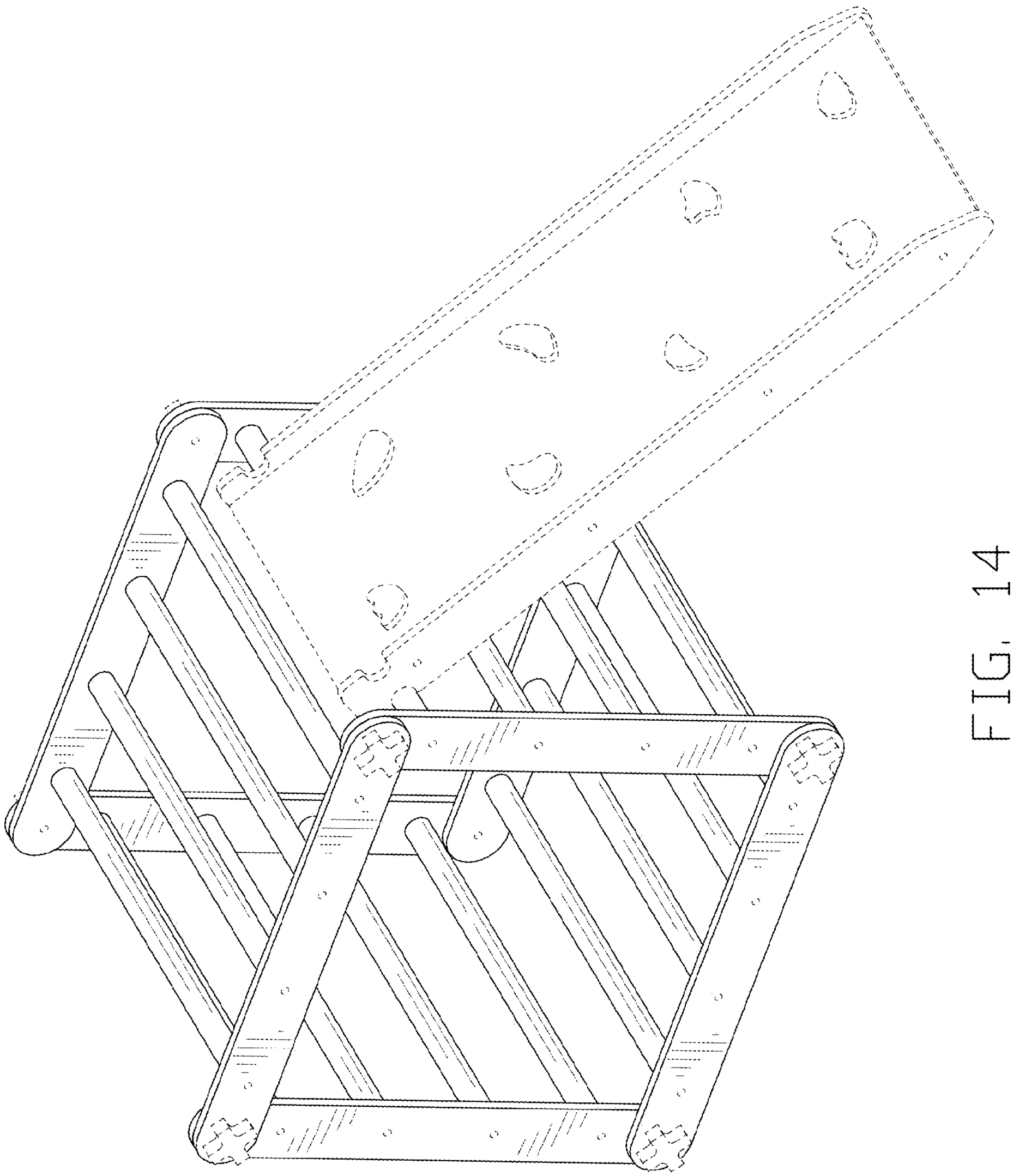

FIG. 14