US00D986412S

(12) United States Design Patent

Hildinger et al.

(10) Patent No.: US D986,412 S
(45) Date of Patent: ** May 16, 2023

(54) **CANNULA**

(71) Applicant: **free life medical GmbH**, Aachen (DE)

(72) Inventors: **Karl Heinz Hildinger**, Aachen (DE); **Rüdiger Autschbach**, Aachen (DE); **Bernhard Schmitz**, Schleiden (DE)

(73) Assignee: **FREE LIFE MEDICAL GMBH**, Aachen (DE)

(**) Term: **15 Years**

(21) Appl. No.: **29/747,581**

(22) Filed: **Aug. 24, 2020**

(30) **Foreign Application Priority Data**

Feb. 25, 2020 (EM) 007716634

(51) **LOC (14) Cl.** **24-02**

(52) **U.S. Cl.**
USPC **D24/112**

(58) **Field of Classification Search**
USPC D24/112–114, 133, 127–131, 140, 146, D24/186, 108

(Continued)

(56) **References Cited**

U.S. PATENT DOCUMENTS

D309,960 S * 8/1990 Applebaugh D24/112
D691,718 S * 10/2013 Ryan D24/133

(Continued)

FOREIGN PATENT DOCUMENTS

CN	304047735	*	2/2017
JP	D1685781	*	5/2021
KR	3010726230001	*	8/2020

OTHER PUBLICATIONS

Intravenous Cannula—IV Cannula, Medlog, [Post date: Mar. 15, 2021], [Site seen May 26, 2022], Seen at URL: https://www.medilogbiohealth.com/2021/03/parts-of-cannula.html (Year: 2021).*

(Continued)

Primary Examiner — Natasha Vujcic
Assistant Examiner — Gilbert B Ford
(74) *Attorney, Agent, or Firm* — Renner, Otto, Boiselle & Sklar, LLP

(57) **CLAIM**

The ornamental design for a cannula, as shown and described.

DESCRIPTION

FIG. **1** is a right side view of a first embodiment of a cannula showing our design.
FIG. **2** is a top view thereof.
FIG. **3** is a left side view thereof.
FIG. **4** is a bottom view thereof.
FIG. **5** is an enlarged front view thereof.
FIG. **6** is an enlarged rear end view.
FIG. **7** is an enlarged partial perspective view showing details thereof.
FIG. **8** is a right side view of the second embodiment of a cannula.
FIG. **9** is an enlarged right side view of the inner tube of the first embodiment of the cannula.
FIG. **10** is an enlarged right side view of the outer tube of the first embodiment of the cannula.
FIG. **11** is an enlarged right side view of a connector used in both embodiments of the cannula illustrated in other figures, the left side view being a mirror image thereof.
FIG. **12** is an enlarged right side view of a plugging used in both embodiments of the cannula illustrated in other figures, the left side view being a mirror image thereof.
FIG. **13** is an enlarged right side view of a tubular segment between the plugging and the connector used in both embodiments of the cannula illustrated in other figures, the left side, top and bottom views being the same; and,
FIG. **14** is an enlarged partial perspective view of the brackets in FIG. **8** of both embodiments showing details thereof.

(Continued)

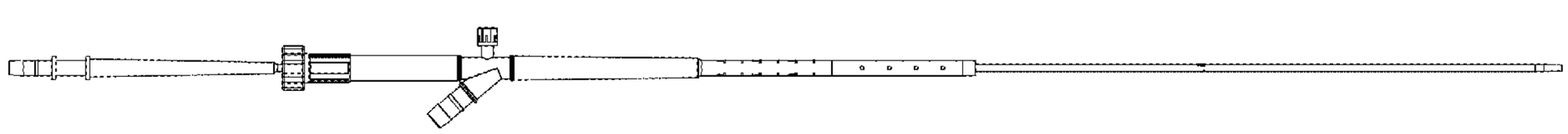

The broken lines in the drawings illustrate portions of the cannula and form no part of the claimed design.

1 Claim, 9 Drawing Sheets

(58) **Field of Classification Search**
CPC A61M 5/42; A61M 25/00; A61M 27/00; A61M 15/0043; A61M 25/0067; A61M 25/007; A61F 2/958
See application file for complete search history.

(56) **References Cited**

U.S. PATENT DOCUMENTS

D695,891	S *	12/2013	Biel	D24/112
9,669,196	B2 *	6/2017	Lee	B32B 1/08
9,925,353	B2 *	3/2018	Shorey	A61M 25/0069
9,931,101	B2 *	4/2018	Okubo	A61M 25/01
D820,436	S *	6/2018	Kheradpir	D24/112
10,124,150	B2 *	11/2018	Okamura	A61M 29/00
D847,335	S *	4/2019	Kuwada	D24/140
10,368,932	B2 *	8/2019	Nasralla	A61B 17/8855
10,478,535	B2 *	11/2019	Ogle	A61M 25/0074
D879,951	S *	3/2020	Kucklick	D24/112
10,576,252	B2 *	3/2020	Valaie	A61B 17/3421
10,716,915	B2 *	7/2020	Ogle	A61M 25/10
10,926,074	B2 *	2/2021	Wilson	A61N 7/00
D917,041	S *	4/2021	Stengele	D24/112
2014/0128734	A1 *	5/2014	Genstler	A61B 8/12 600/439
2015/0032056	A1 *	1/2015	Okamura	A61M 25/0662 604/164.1
2015/0133865	A1 *	5/2015	Okamura	A61M 39/06 604/164.1

OTHER PUBLICATIONS

Cannulas, Polymed Medical Devices, [Post date: Sep. 10, 2020], [Site seen May 26, 2022], Seen at URL: https://www.polymedicure.com/i-v-cannula/ (Year: 2020).*

* cited by examiner

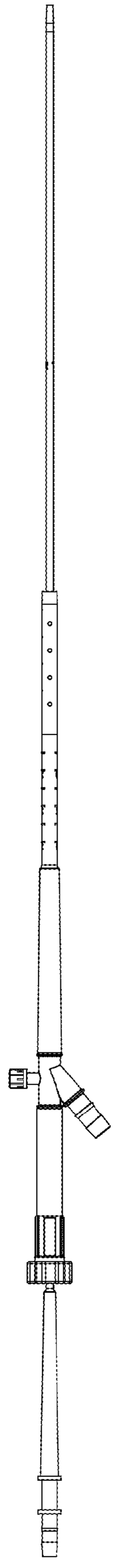

Fig. 1

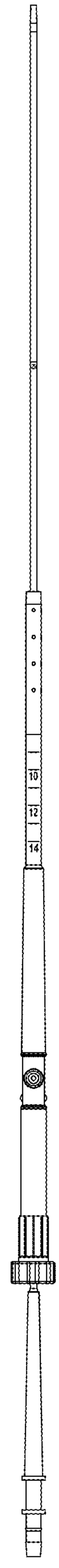

Fig. 2

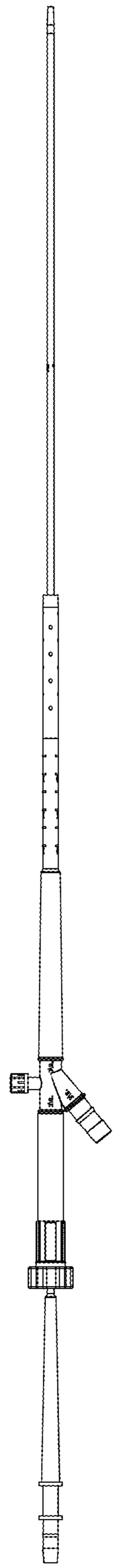

Fig. 3

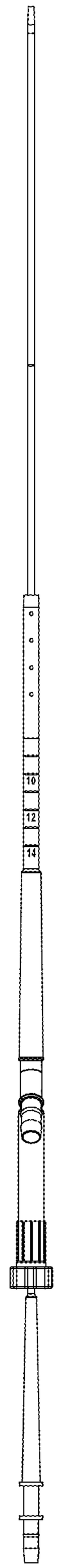

Fig. 4

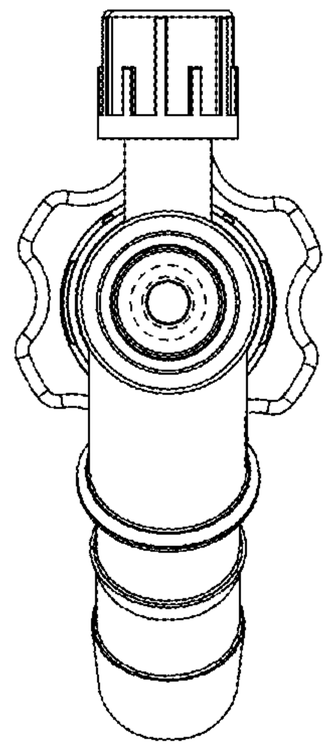

Fig. 5

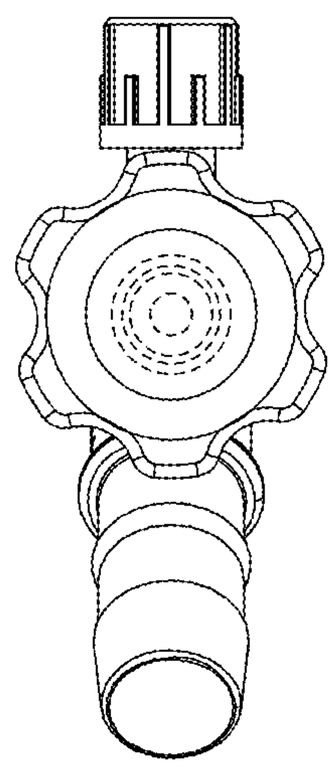

Fig. 6

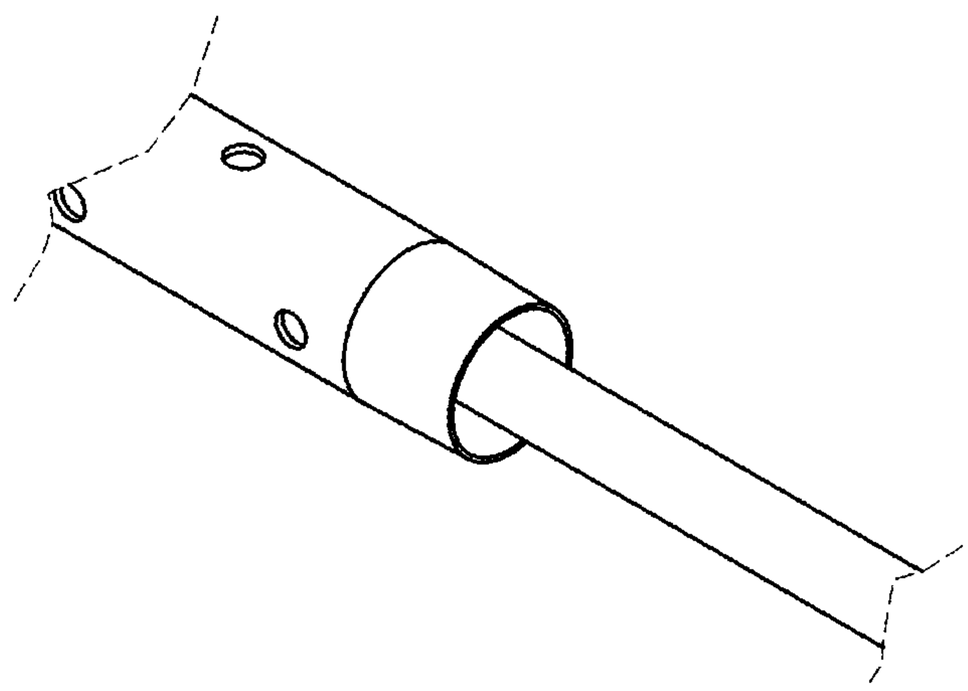

Fig. 7

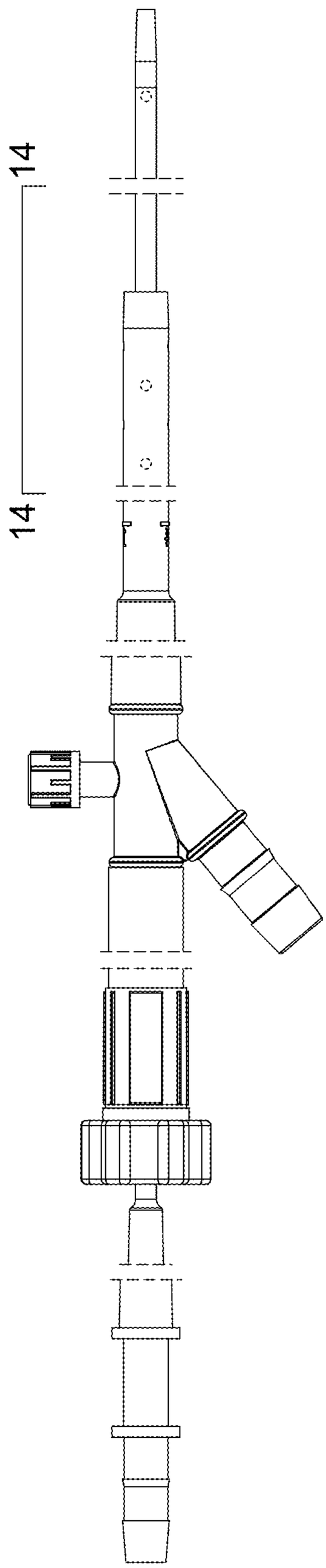

Fig. 8

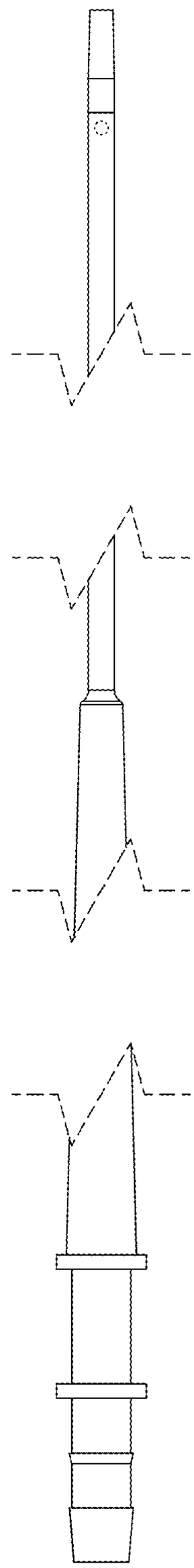

Fig. 9

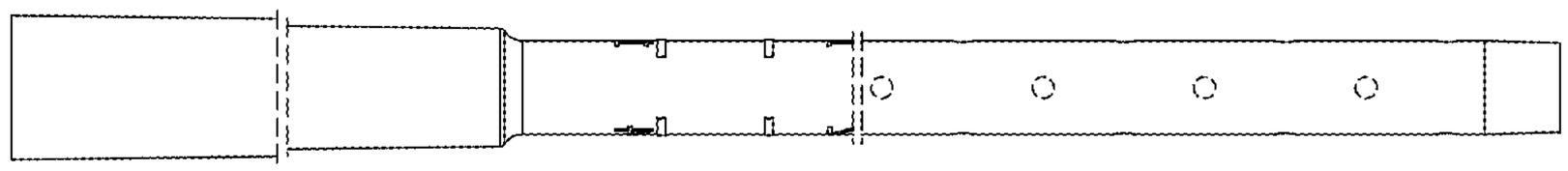

Fig. 10

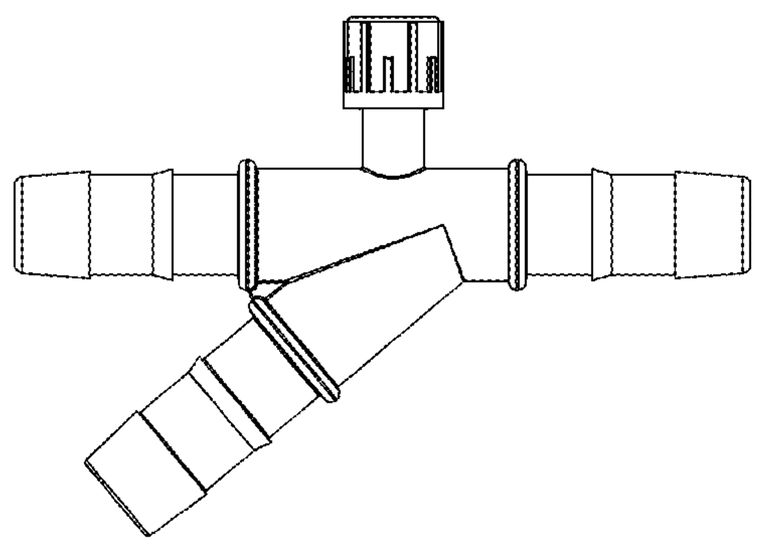

Fig. 11

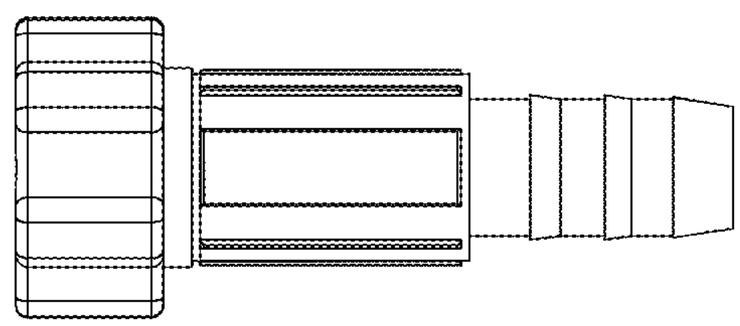

Fig. 12

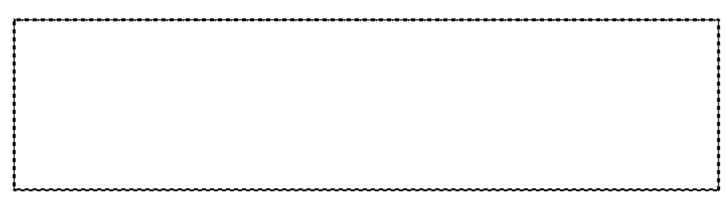

Fig. 13

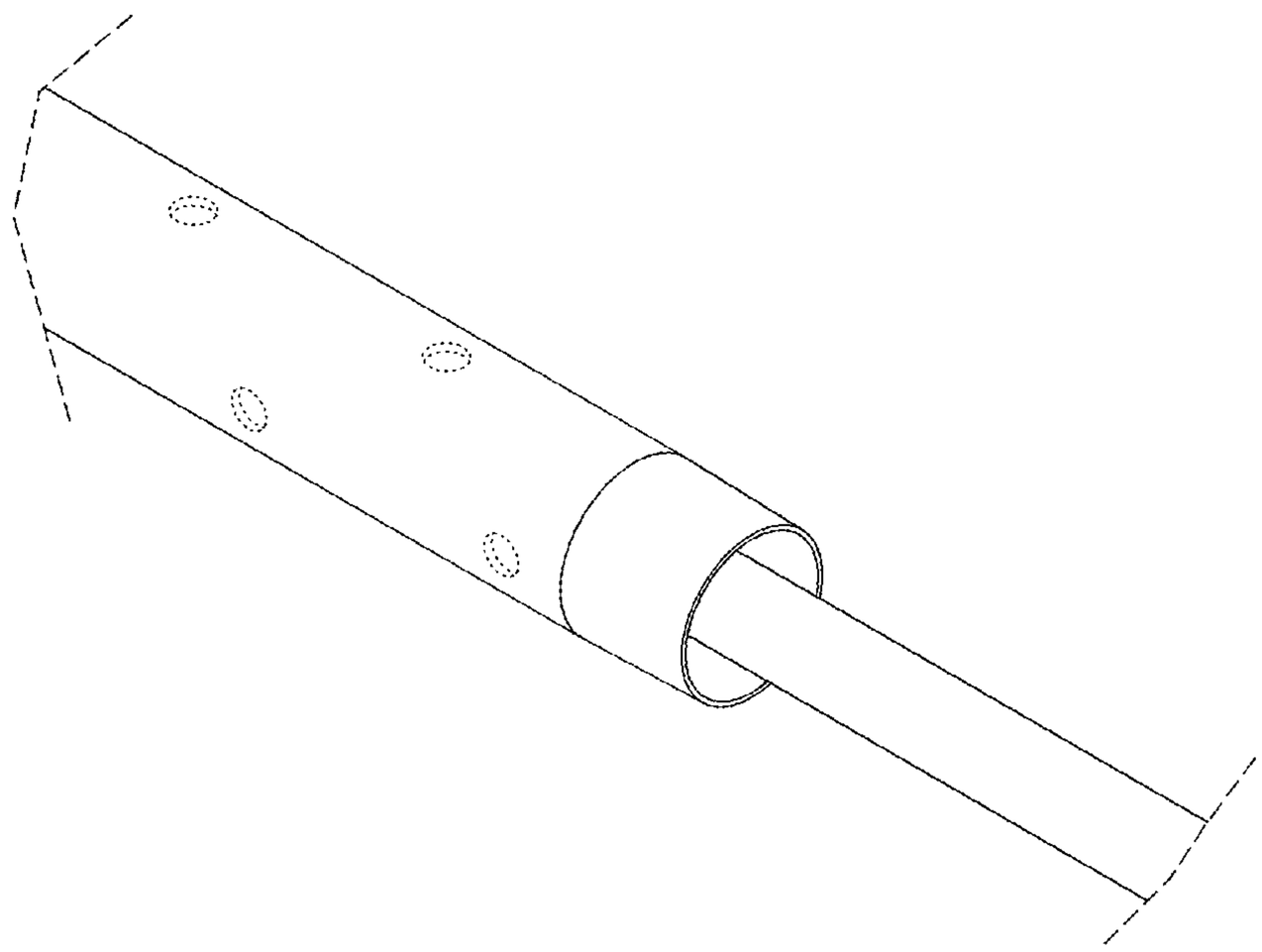

Fig. 14