US00D986171S

(12) United States Design Patent

Kaneko

(10) Patent No.: US D986,171 S
(45) Date of Patent: ** May 16, 2023

(54) **MOTOR FOR RAILWAY VEHICLE**

(71) Applicant: **Mitsubishi Electric Corporation**, Tokyo (JP)

(72) Inventor: **Kenta Kaneko**, Tokyo (JP)

(73) Assignee: **Mitsubishi Electric Corporation**, Tokyo (JP)

(**) Term: **15 Years**

(21) Appl. No.: **29/798,358**

(22) Filed: **Jul. 7, 2021**

(30) **Foreign Application Priority Data**

Feb. 4, 2021 (JP) ..... 2021-002421 D

(51) **LOC (14) Cl.** **13-01**

(52) **U.S. Cl.**
USPC **D13/112**

(58) **Field of Classification Search**
USPC D13/112, 113, 114, 122, 199; D15/3, 5, D15/199
CPC .. H02K 5/04; H02K 5/10; H02K 5/22; H02K 5/148; H02K 29/14; H02P 6/06; F28F 1/20
See application file for complete search history.

(56) **References Cited**

U.S. PATENT DOCUMENTS

D245,498 S * 8/1977 Andreas D13/112
D304,169 S * 10/1989 Hoshino D13/112
D332,081 S * 12/1992 Sieber D13/112
D462,937 S * 9/2002 Nord D13/112
D664,565 S * 7/2012 Sonoda D15/5
D778,836 S * 2/2017 Schieck D13/112
D813,164 S * 3/2018 Kaneko D13/112
D823,802 S * 7/2018 Battistella D13/112
D836,551 S * 12/2018 Kaneko D13/112
D853,963 S * 7/2019 Hilker D13/112

FOREIGN PATENT DOCUMENTS

JP 1593531 S 12/2017

* cited by examiner

Primary Examiner — Derrick E Holland
(74) *Attorney, Agent, or Firm* — Studebaker & Brackett PC

(57) **CLAIM**

The ornamental design for a motor for railway vehicle, as shown and described.

DESCRIPTION

FIG. **1** is a front perspective view of the front, bottom, and left sides of a motor for railway vehicle showing my new design;
FIG. **2** is a rear perspective view of the rear, top, and right sides thereof;
FIG. **3** is a front view thereof;
FIG. **4** is a rear view thereof;
FIG. **5** is a top plan view thereof;
FIG. **6** is a bottom view thereof;
FIG. **7** is a right side view thereof;
FIG. **8** is a left side view thereof; and,
FIG. **9** is an enlarged view of taken along lines **9-9** of FIG. **1**.
The broken lines shown represent portions of the motor for railway vehicle and form no part of the claimed design.

1 Claim, 9 Drawing Sheets

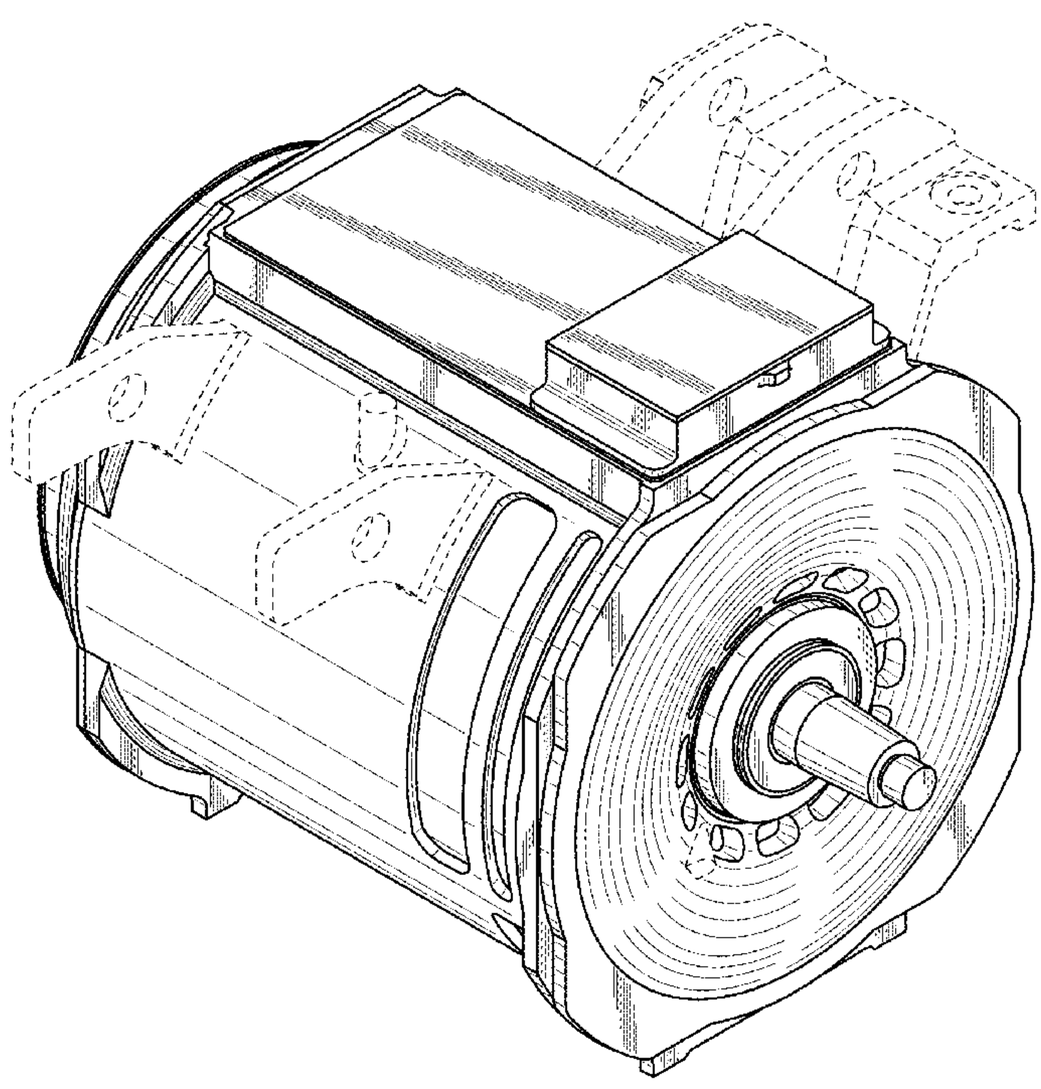

FIG. 1

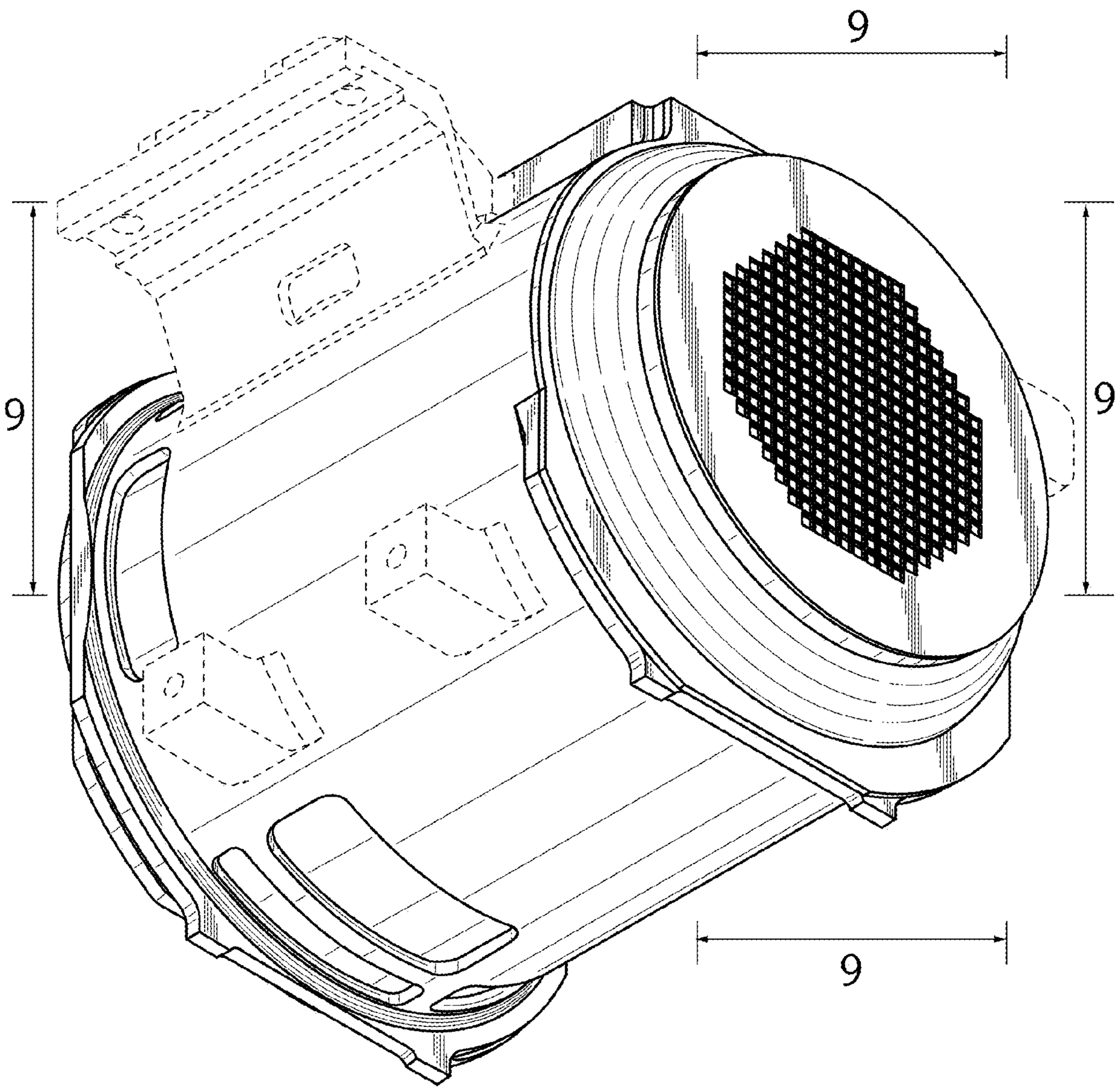

FIG. 2

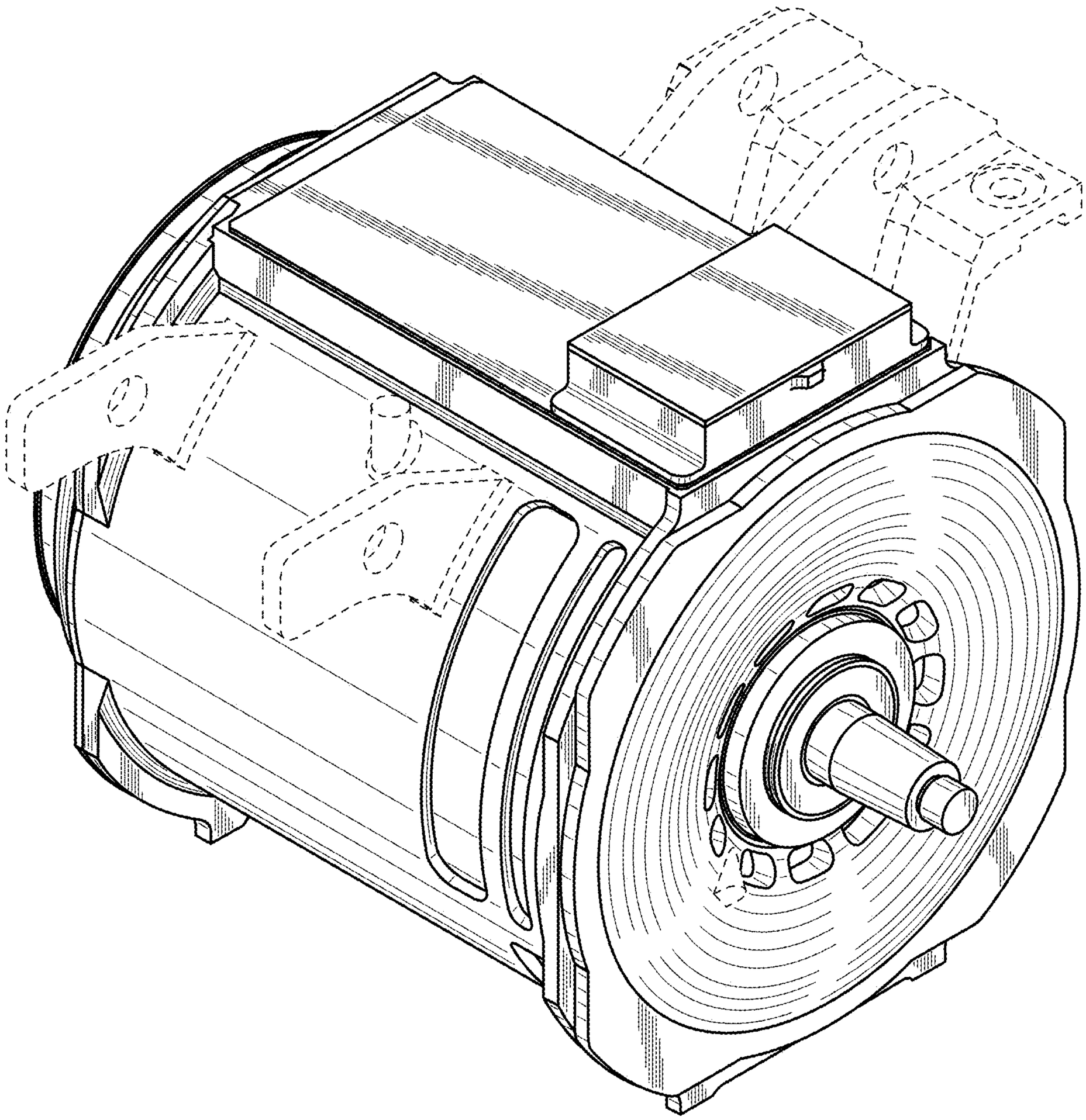

FIG. 3

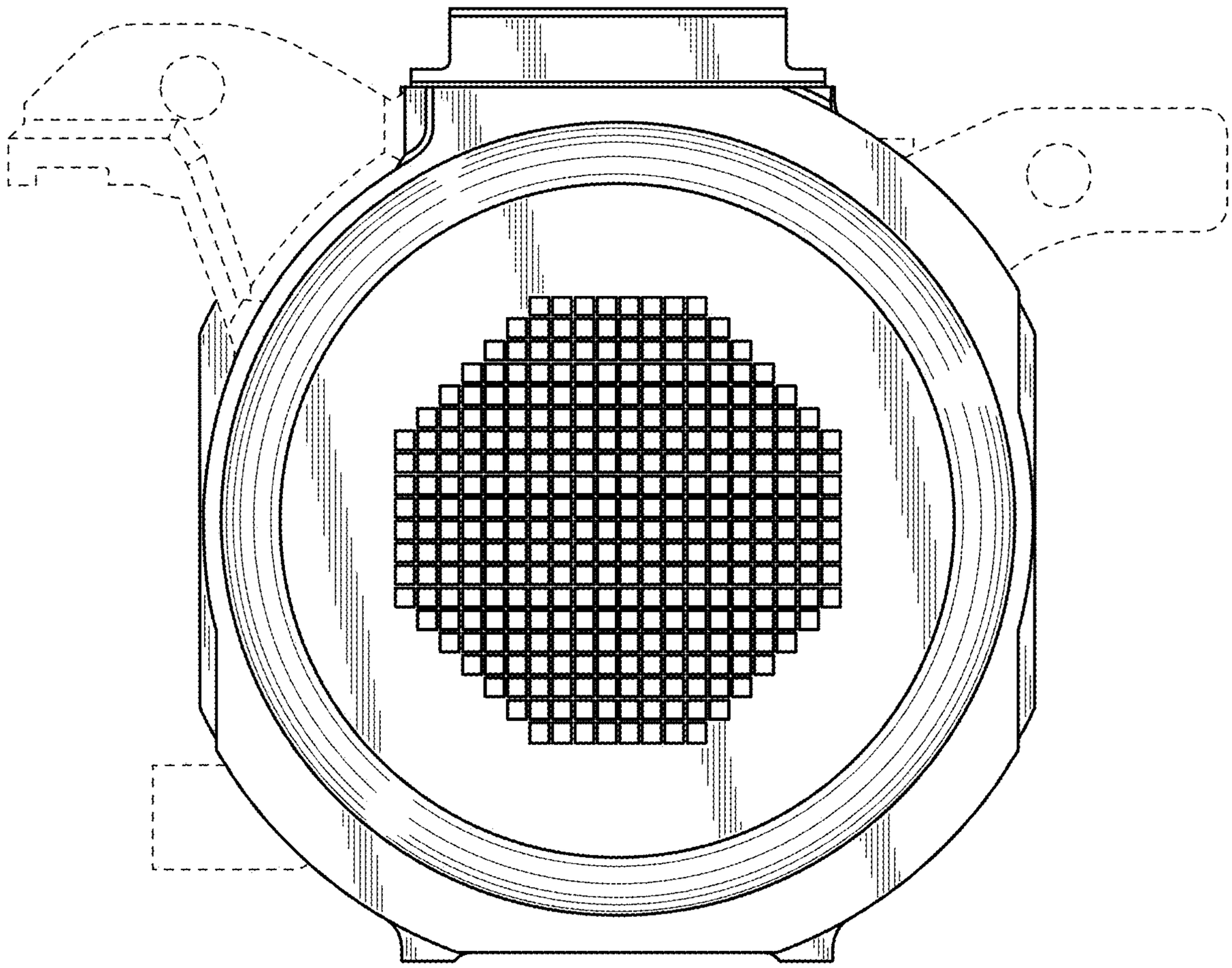

FIG. 4

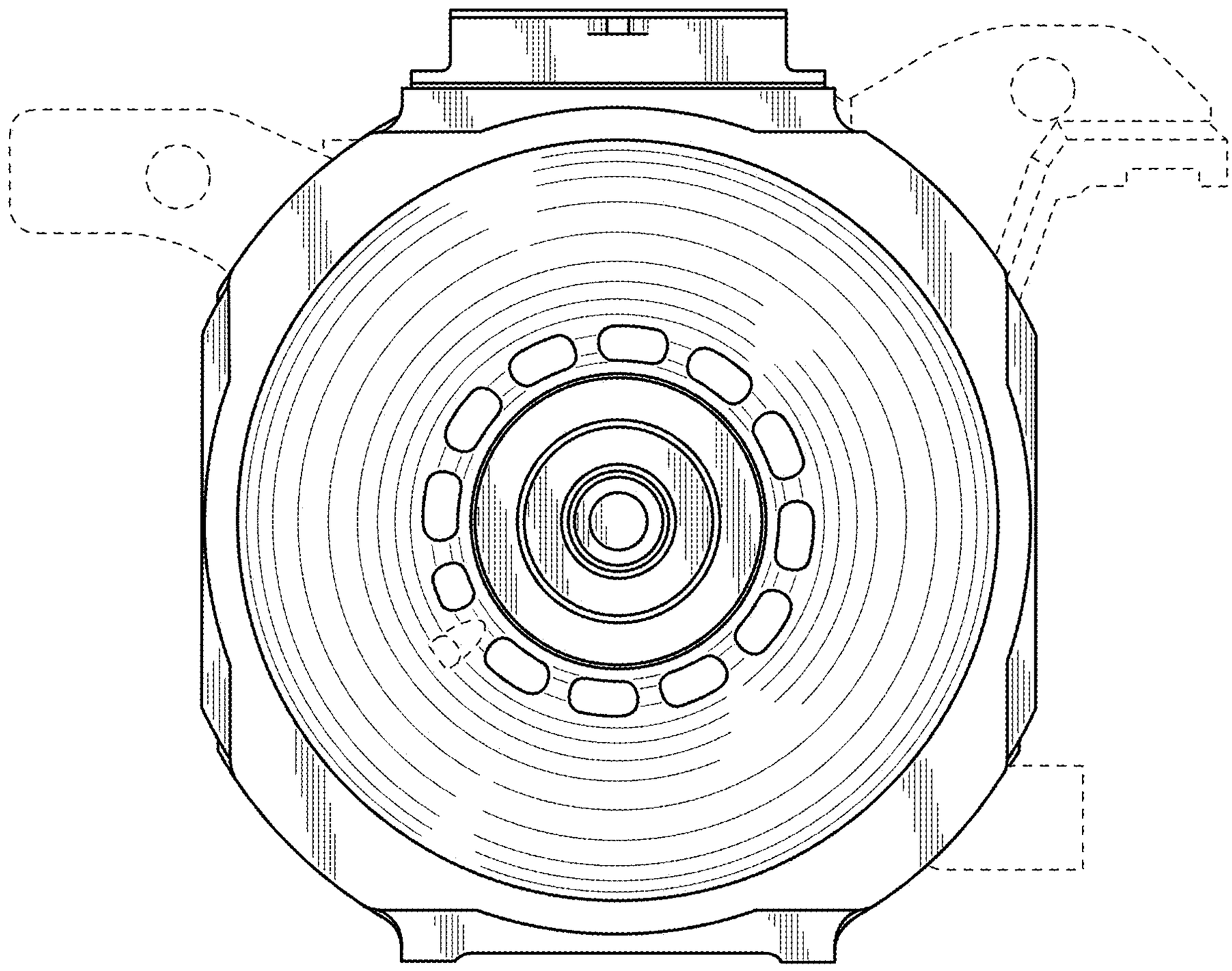

FIG. 5

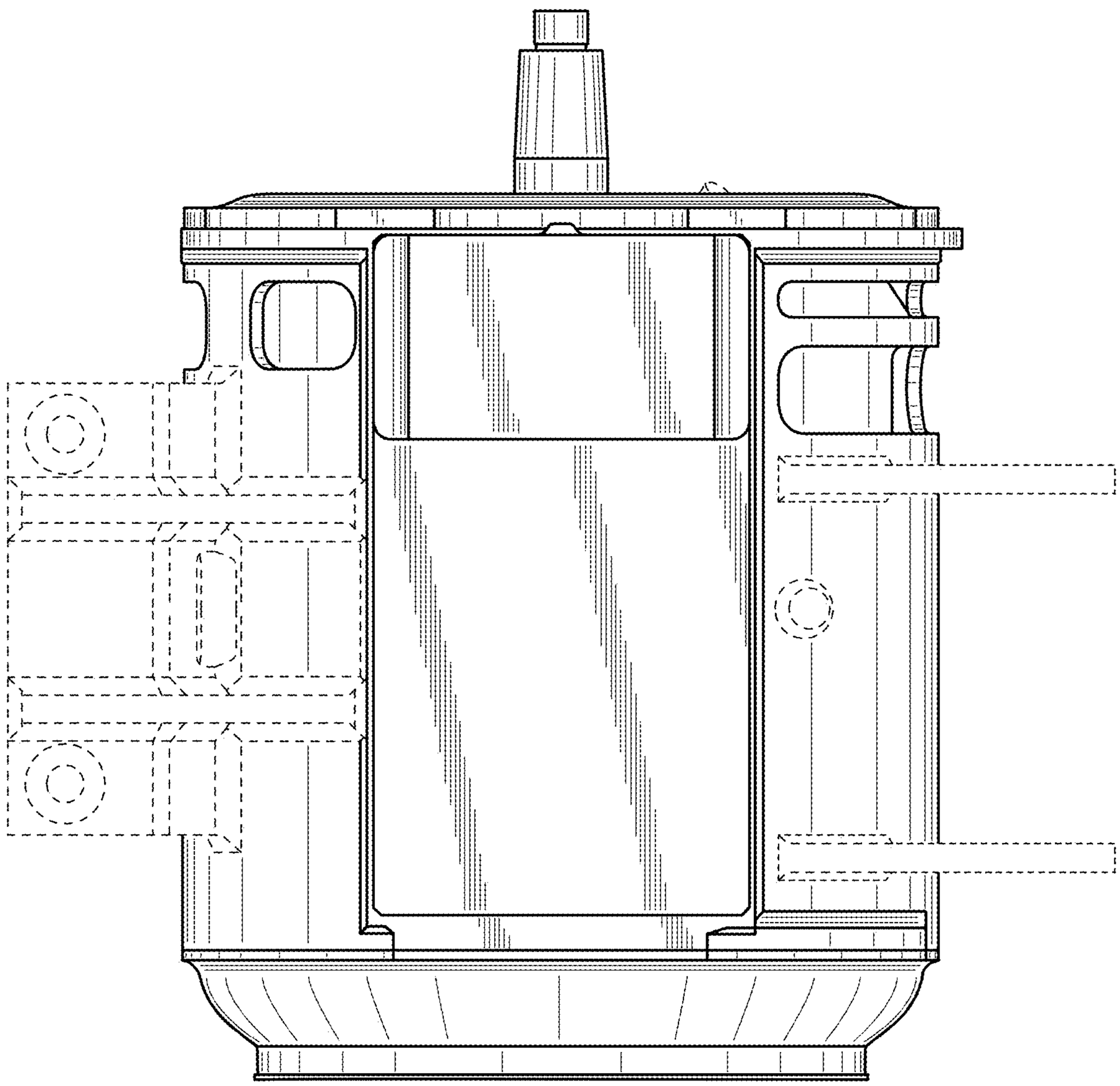

FIG. 6

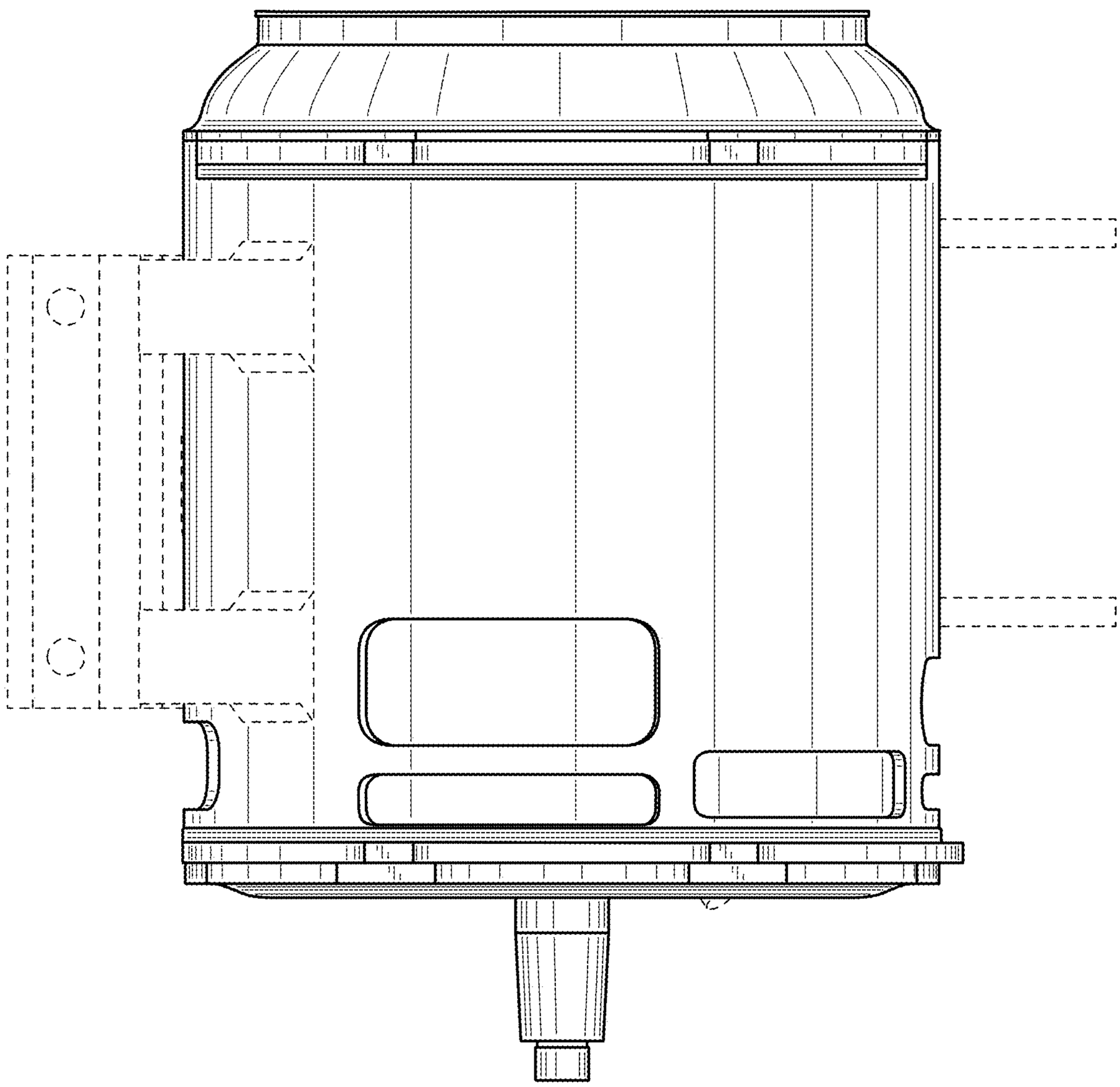

FIG. 7

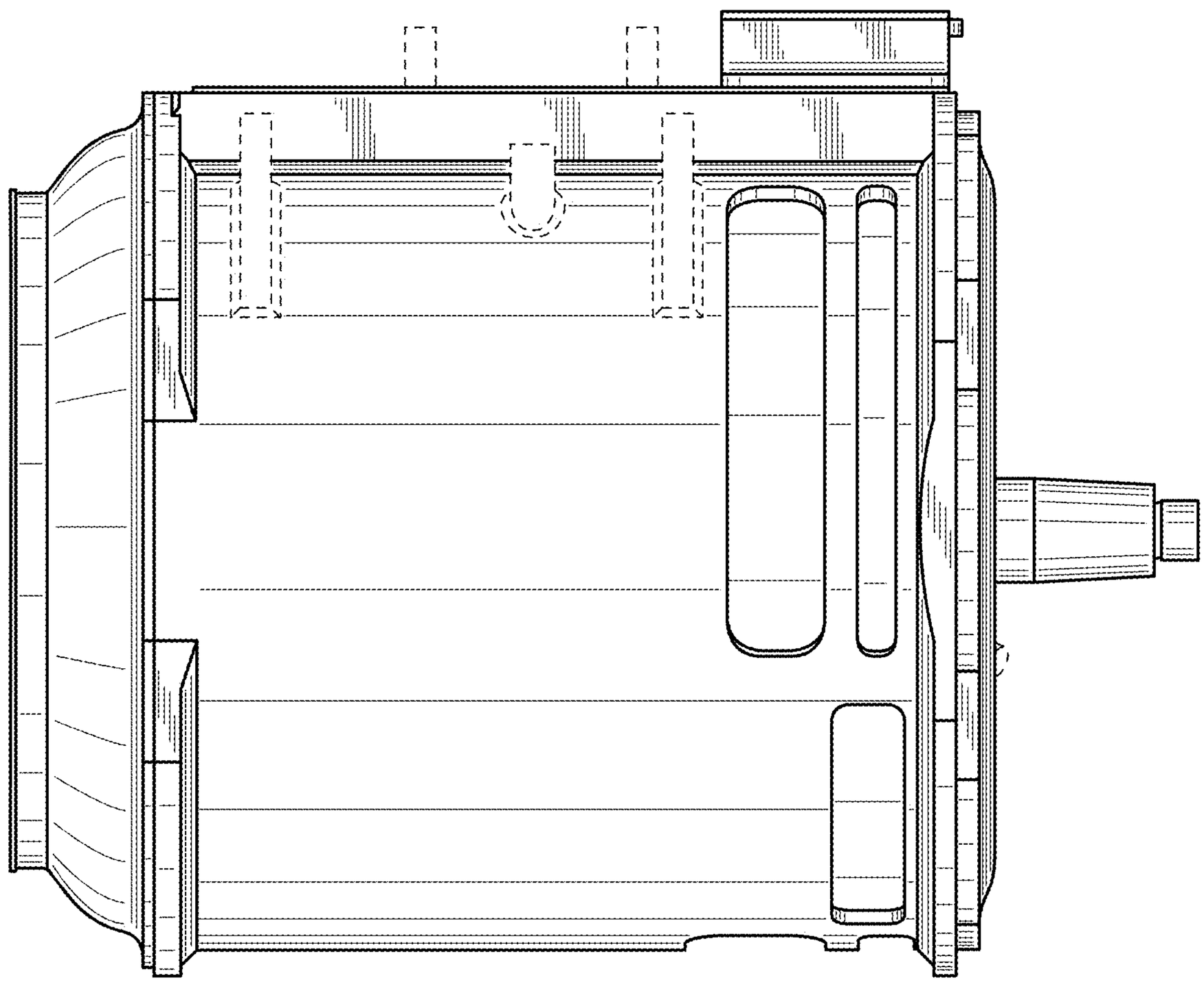

FIG. 8

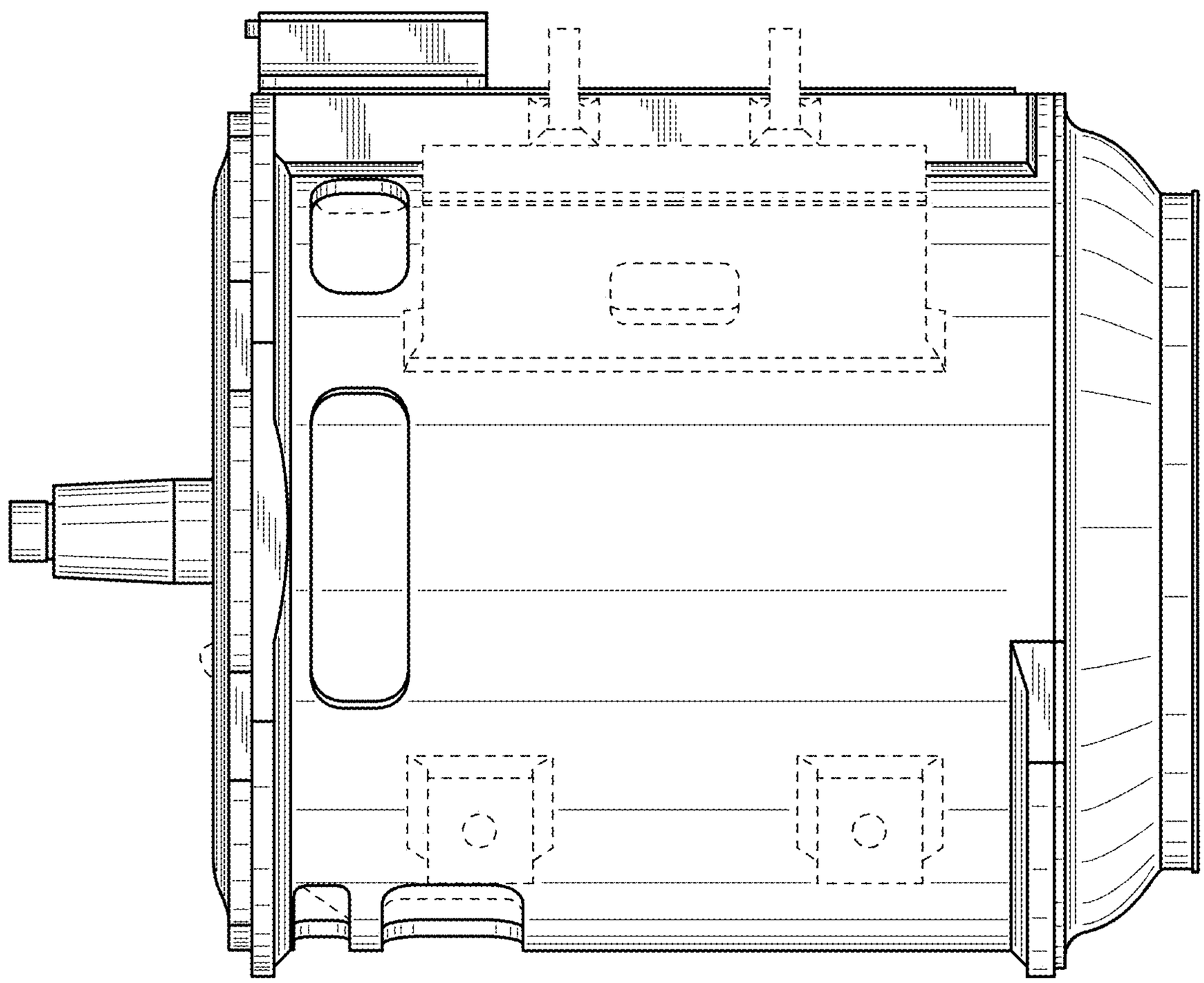
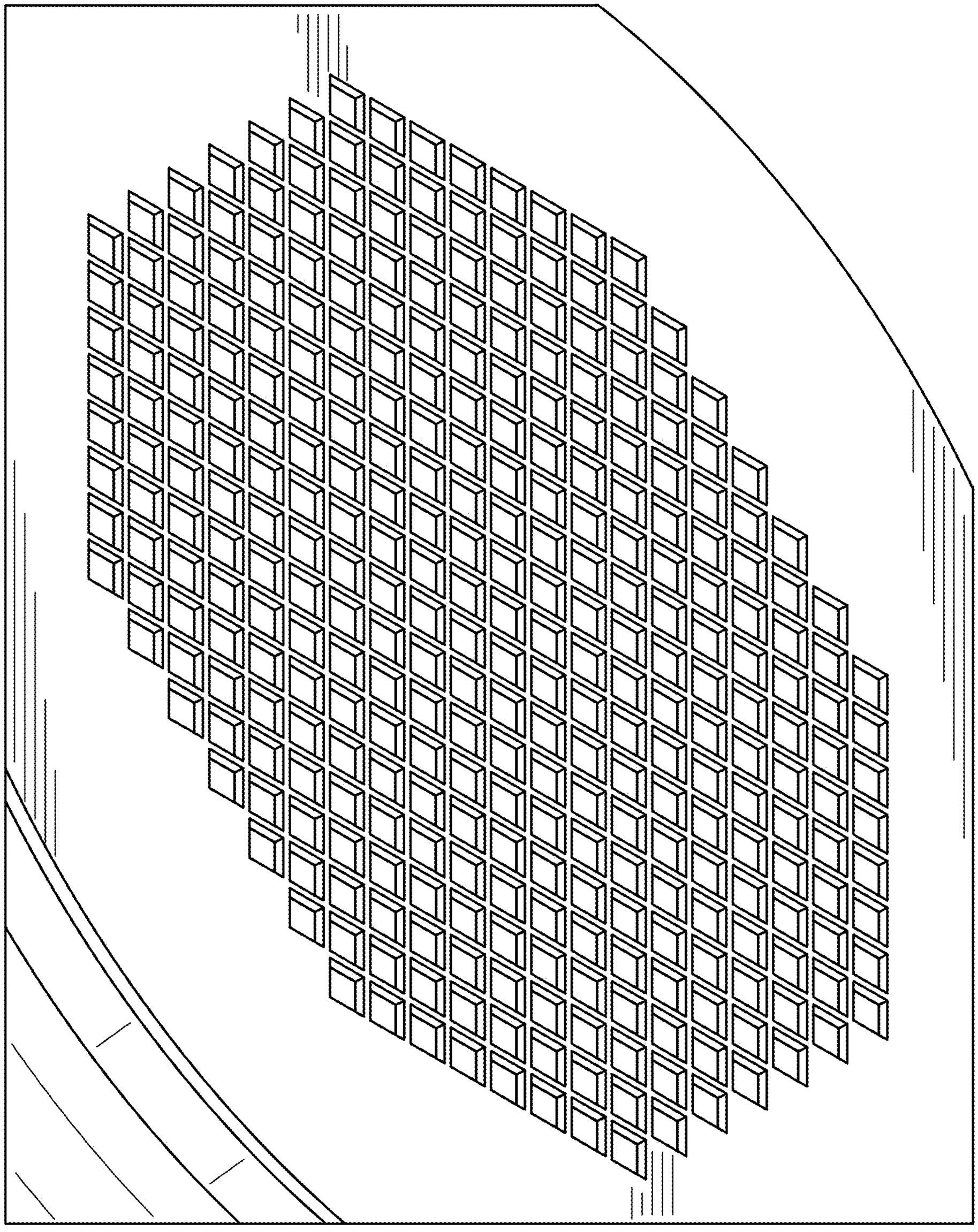
FIG. 9