US00D985753S

(12) United States Design Patent
Chenal

(10) Patent No.: US D985,753 S
(45) Date of Patent: ** May 9, 2023

(54) **EARPIECE ASSEMBLY**

(71) Applicant: **JMJ Holdings, LLC**, Frederic, WI (US)

(72) Inventor: **David M. Chenal**, Frederic, WI (US)

(73) Assignee: **JMJ Holdings, LLC**, Frederic, WI (US)

(**) Term: **15 Years**

(21) Appl. No.: **29/853,812**

(22) Filed: **Sep. 19, 2022**

Related U.S. Application Data

(63) Continuation of application No. 29/769,169, filed on Feb. 3, 2021, now Pat. No. Des. 964,547.

(51) **LOC (14) Cl.** **28-01**

(52) **U.S. Cl.**
USPC **D24/106**

(58) **Field of Classification Search**
USPC D9/440, 447; D24/106; D14/205, 224
CPC A61F 2011/08; A61F 2011/085; A61F 13/2005; A61F 13/2042; A61B 17/12104; A61B 17/12159
See application file for complete search history.

(56) **References Cited**

U.S. PATENT DOCUMENTS

D259,279 S * 5/1981 Takeda A61F 11/08 D24/174
D521,637 S * 5/2006 Yang D24/106
D539,415 S * 3/2007 Fleming A61F 11/08 D24/106
D595,837 S * 7/2009 Benner D24/106
D611,929 S * 3/2010 Blanchard A61M 11/007 D14/205
D617,891 S * 6/2010 Turdjian A61F 11/08 D24/106
D624,999 S * 10/2010 Turdjian A61F 11/08 D24/106
D727,301 S * 4/2015 Smith D14/223
D745,135 S * 12/2015 Butler A61F 11/08 D24/106
D759,802 S * 6/2016 Hamer D24/106
11,179,273 B2 * 11/2021 Chenal A61F 11/08
D938,574 S * 12/2021 Guo A61F 11/08 428/372
D952,831 S * 5/2022 Chenal D24/106
D964,547 S * 9/2022 Chenal A61F 11/08 D24/106
2002/0066455 A1 * 6/2002 Falco A61F 11/08 128/864
2004/0069310 A1 * 4/2004 Falco A61F 11/08 128/864

(Continued)

Primary Examiner — Calvin E Vansant
(74) *Attorney, Agent, or Firm* — Jonathan M. Rixen; Charles A. Lemaire; Lemaire Patent Law Firm, P.L.L.C.

(57) **CLAIM**

The ornamental design for an earpiece assembly, as shown and described.

DESCRIPTION

FIG. **1** is a perspective view of the earpiece assembly having a new ornamental design;
FIG. **2** is a bottom view thereof;
FIG. **3** is a top view thereof;
FIG. **4** is a left-side view thereof;
FIG. **5** is a right-side view thereof;
FIG. **6** is a front view thereof; and,
FIG. **7** is a back view thereof.
The broken lines in the drawings depict portions of the earpiece assembly that form no part of the claimed design. In the drawings, the dot-dash lines represent boundaries of the claim and form no part of the claimed design.

1 Claim, 4 Drawing Sheets

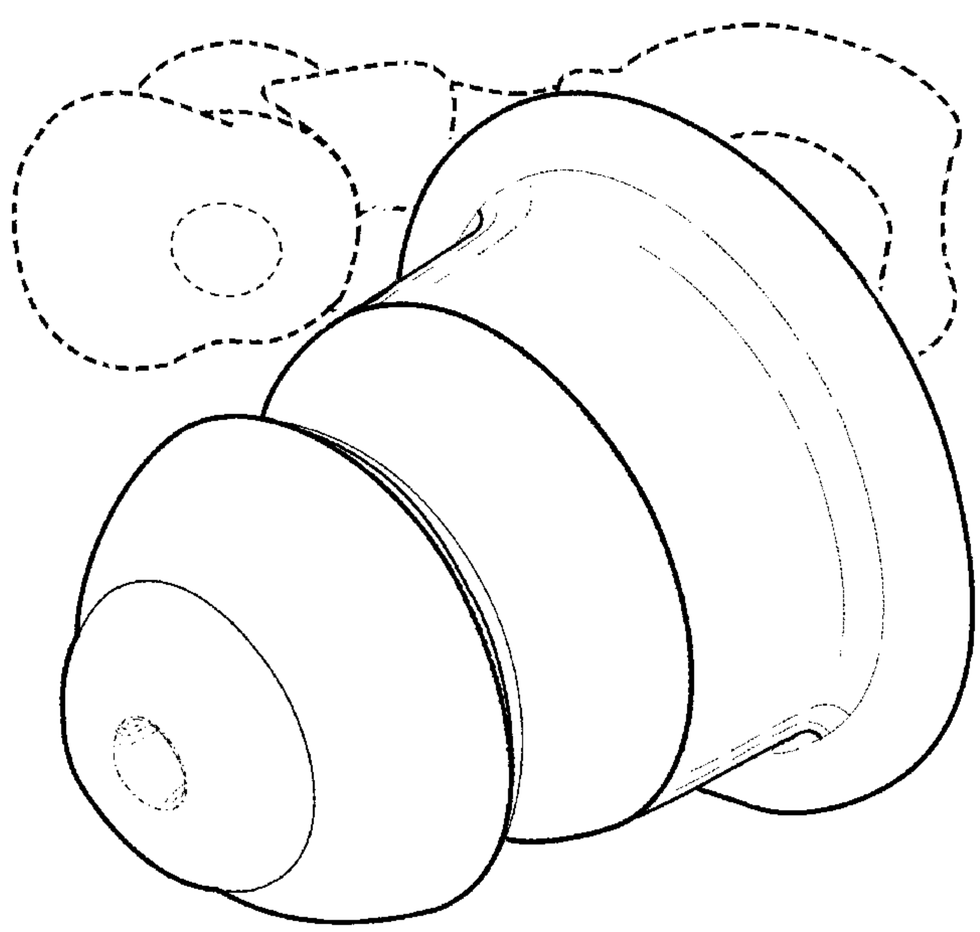

(56) **References Cited**

U.S. PATENT DOCUMENTS

2010/0294285	A1*	11/2010	Turdjian	A61F 11/08 128/867
2014/0017492	A1*	1/2014	Hamer	A61F 11/08 428/372
2014/0190494	A1*	7/2014	Ely	A61F 11/08 D14/223
2014/0230830	A1*	8/2014	Hamer	A61F 11/08 264/46.4
2015/0047651	A1*	2/2015	Haapapuro	A61F 11/12 D24/106
2016/0302974	A1*	10/2016	Chenal	A61F 11/08
2021/0069481	A1*	3/2021	Åhnblad	A61F 11/08

* cited by examiner

FIG. 1

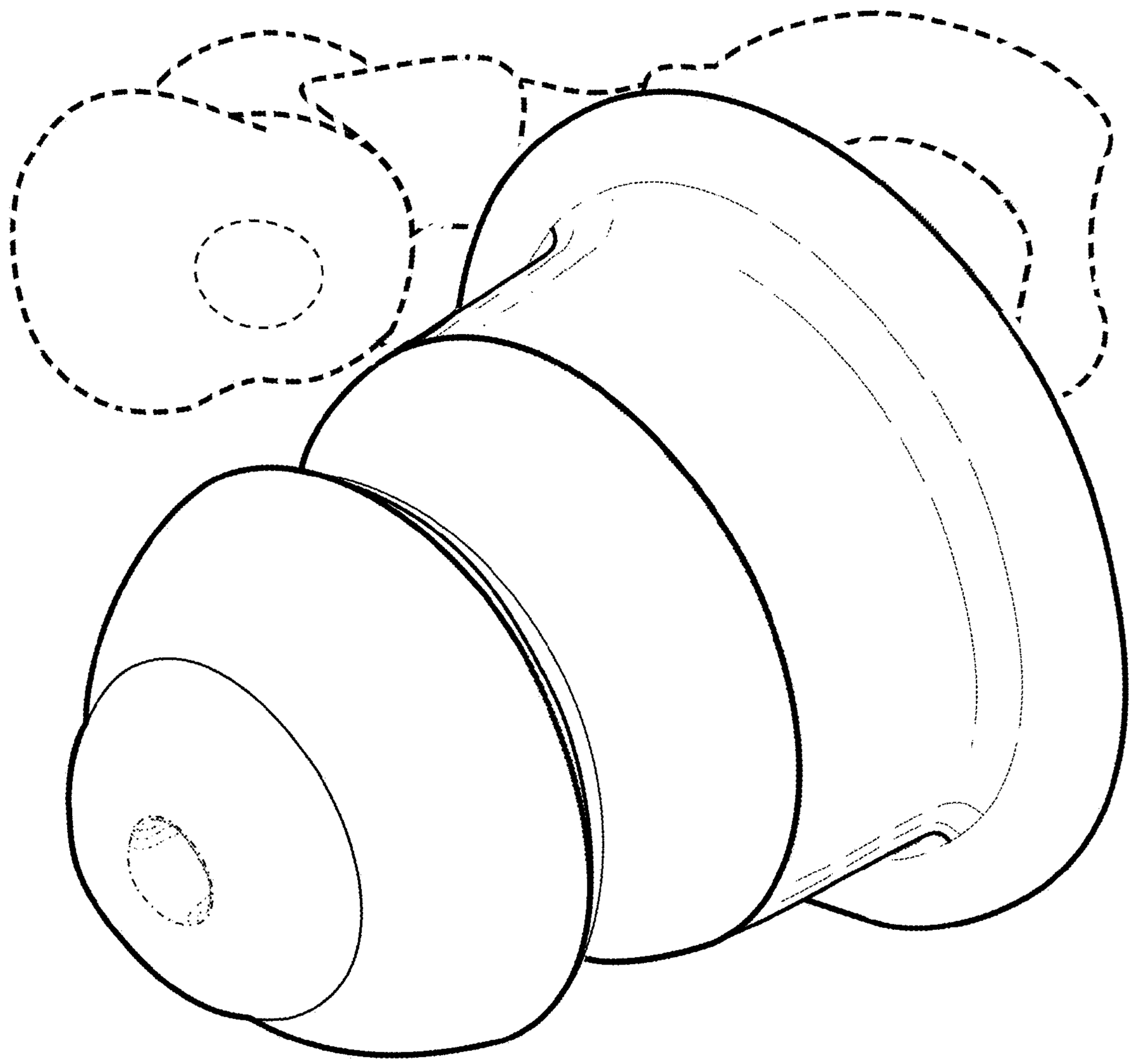

FIG. 2

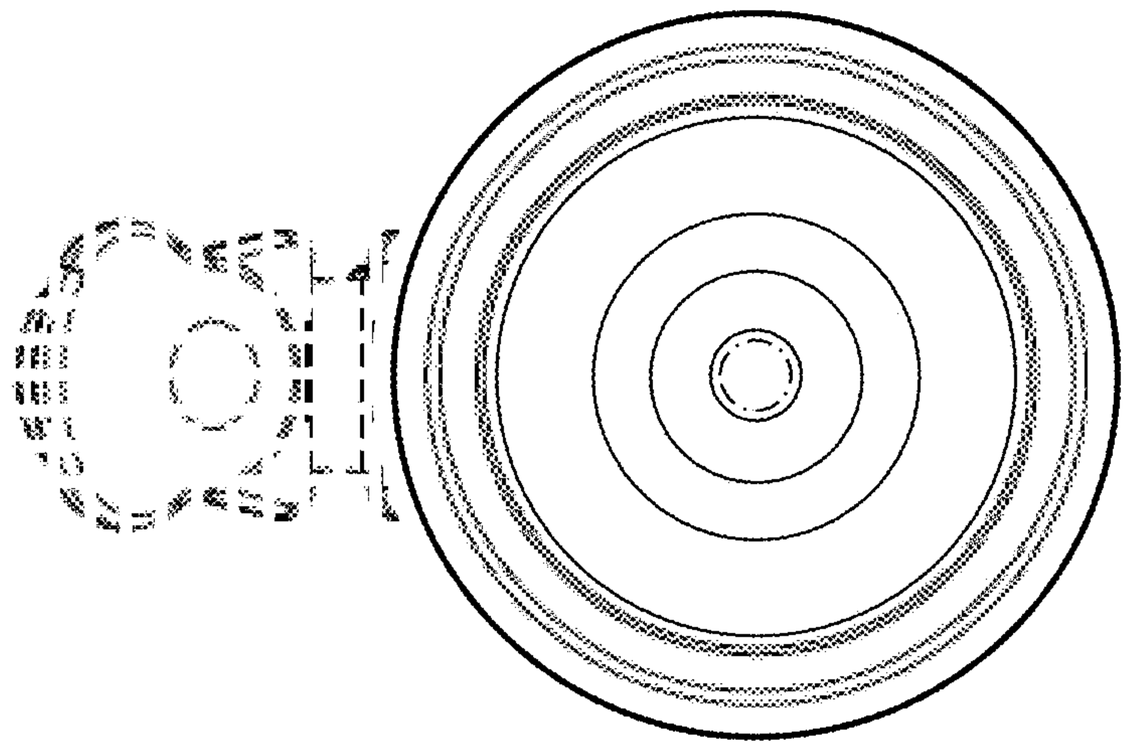

FIG. 3

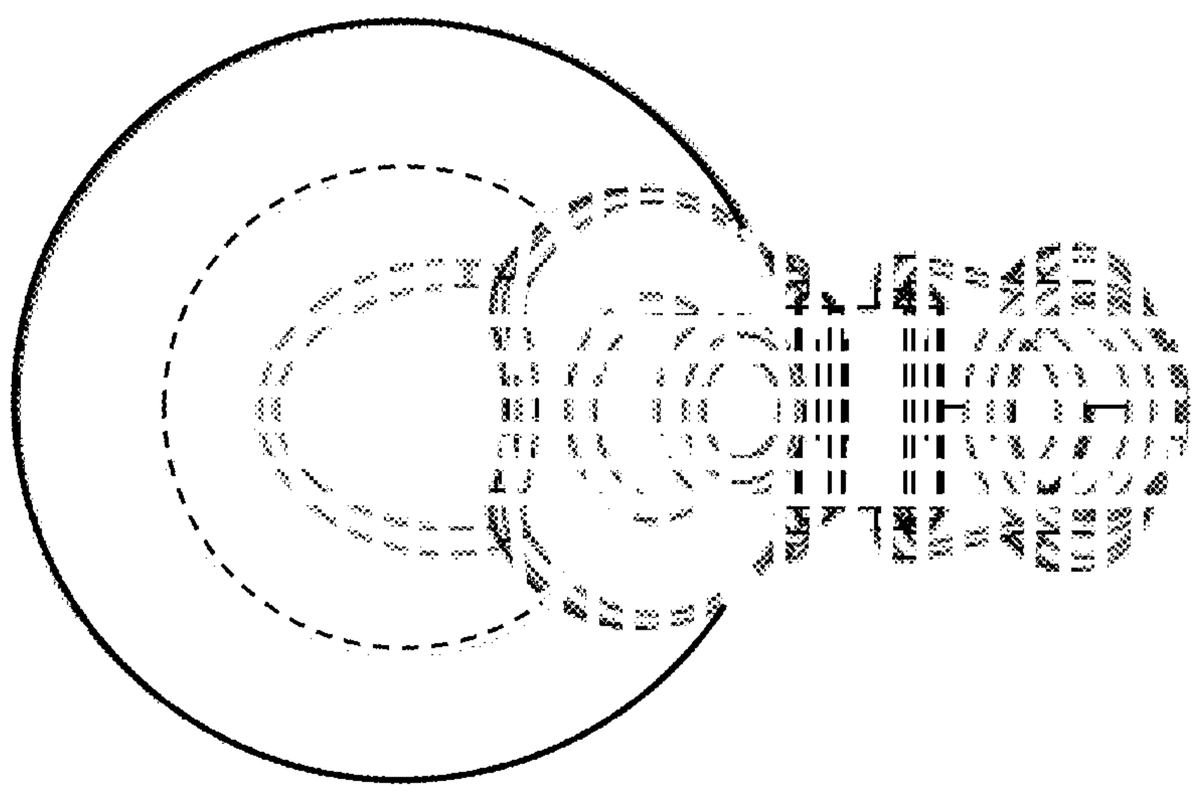

FIG. 4

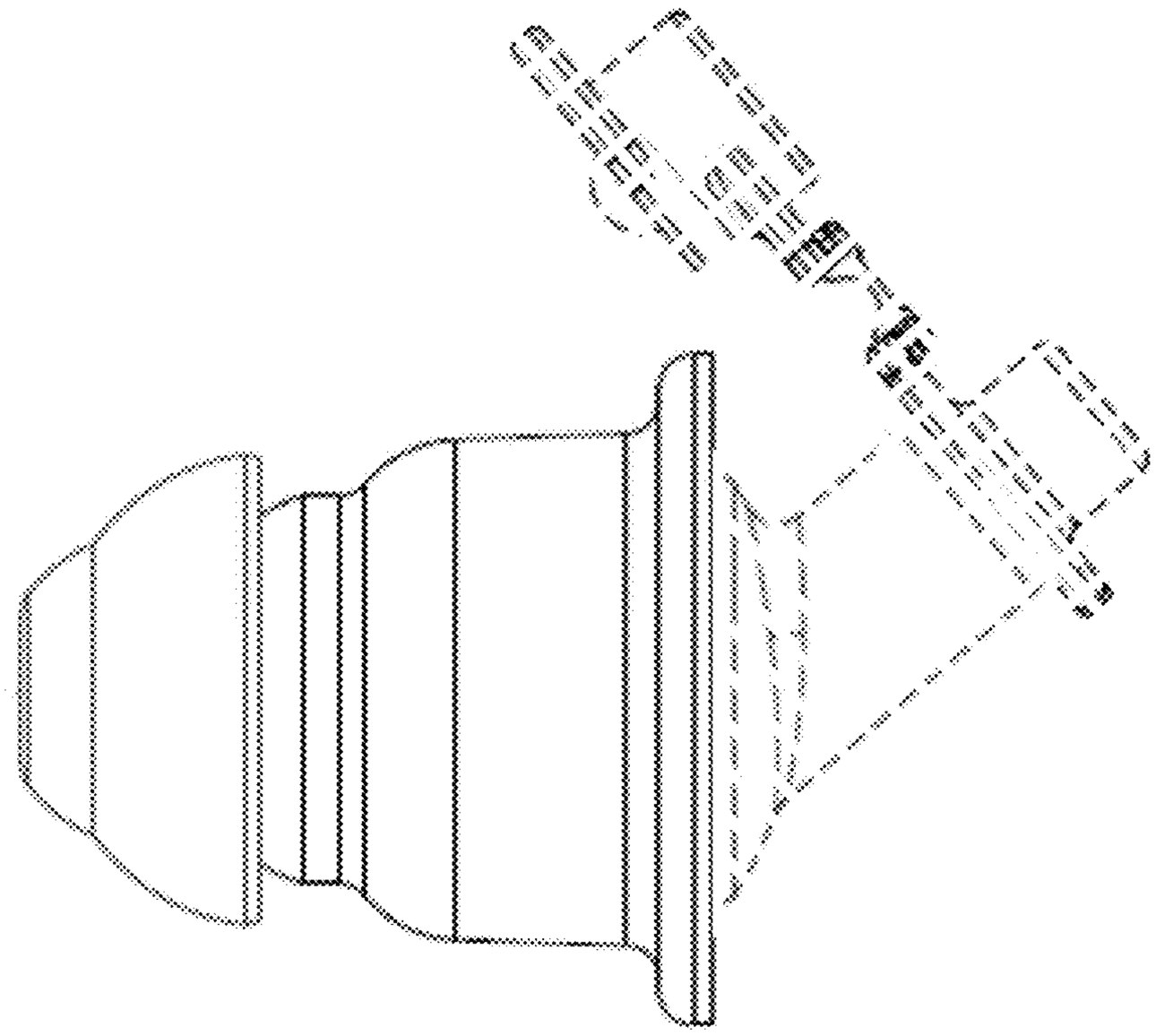

FIG. 5

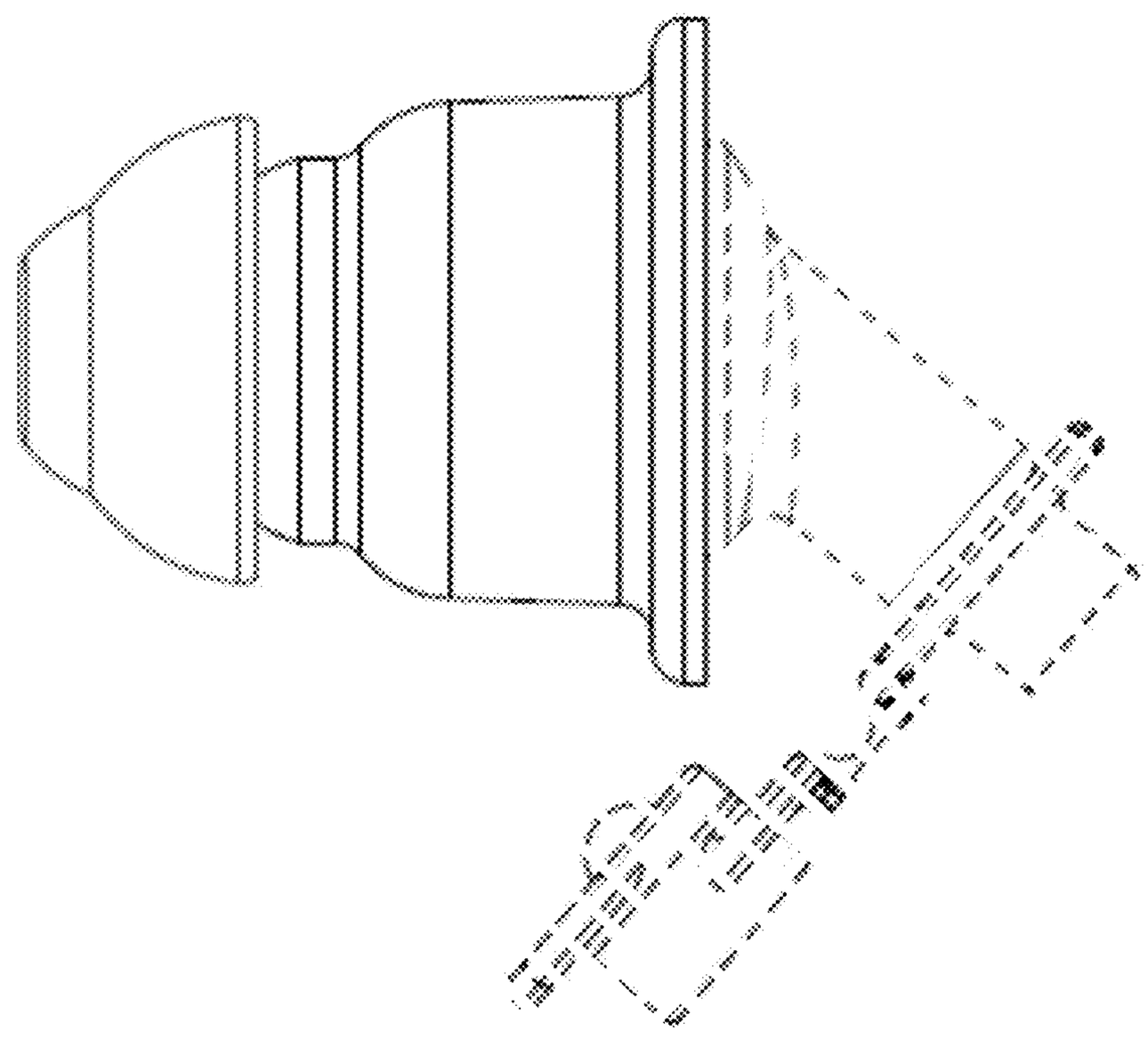

FIG. 6

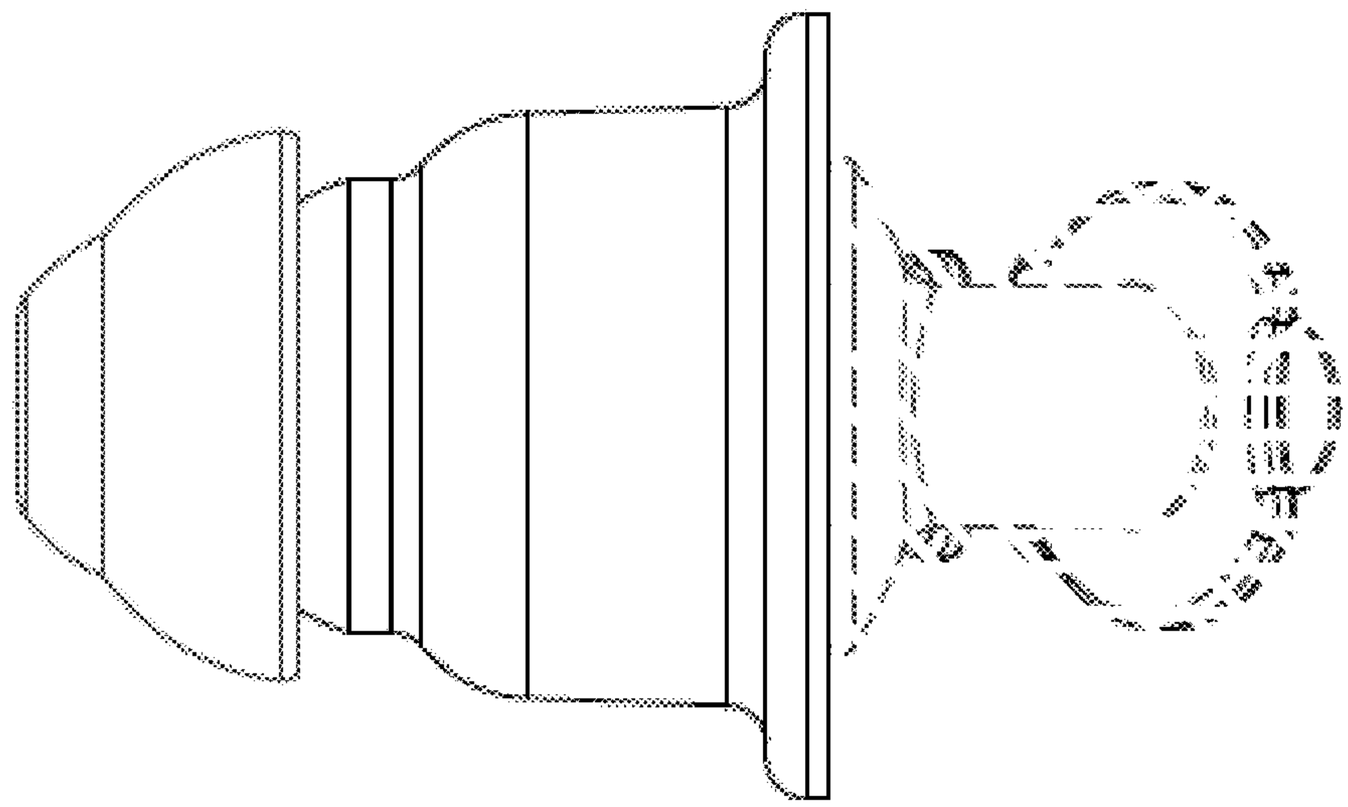
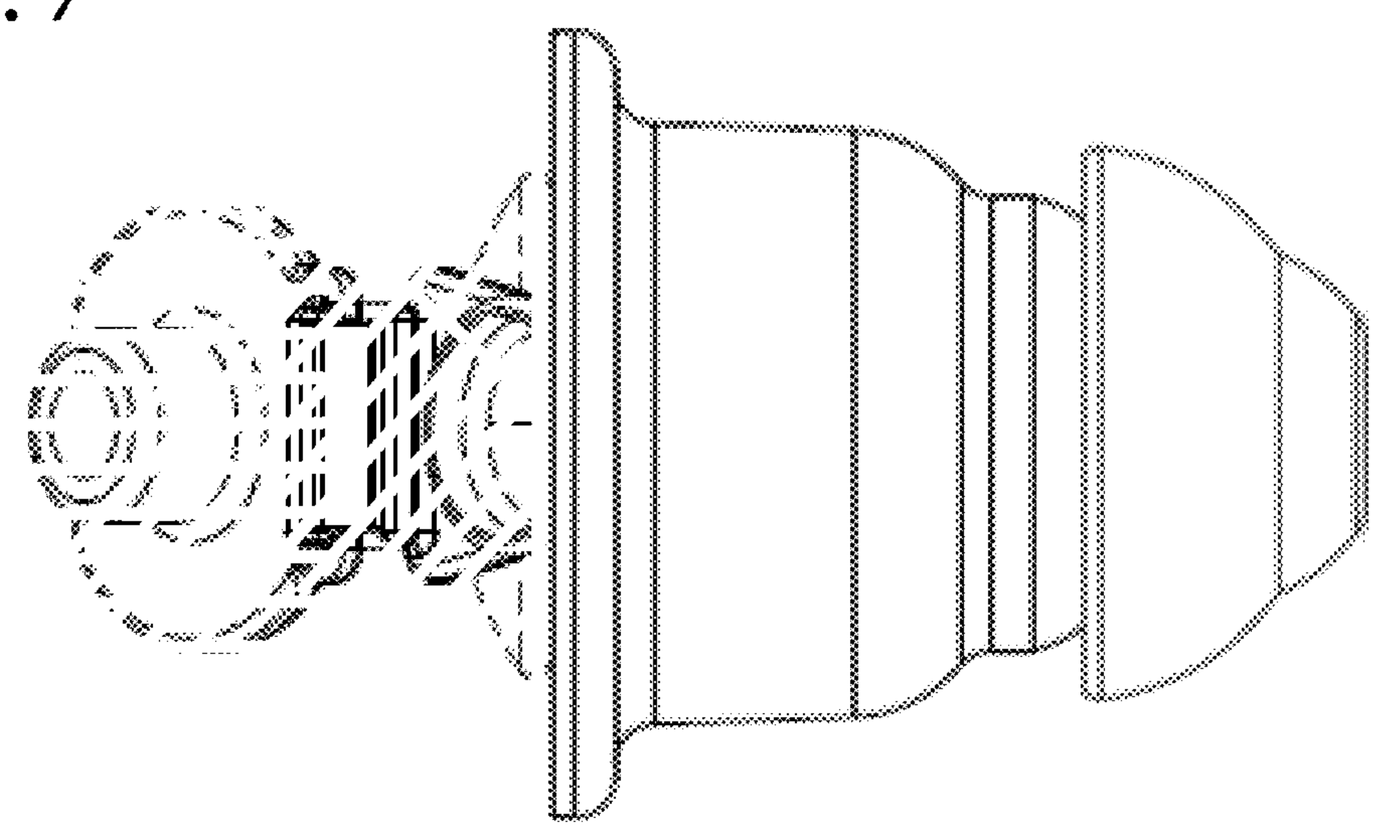
FIG. 7