US00D985082S

(12) United States Design Patent

Demkowski et al.

(10) Patent No.: US D985,082 S
(45) Date of Patent: ** May 2, 2023

(54) **GOLF PUTTER**

(71) Applicant: **Taylor Made Golf Company, Inc.**, Carlsbad, CA (US)

(72) Inventors: **Paul M. Demkowski**, Cardiff, CA (US); **Jonathan Dreitlein**, Carlsbad, CA (US); **Bill Price**, Santa Ana, CA (US); **Robert Nunez**, Vista, CA (US)

(73) Assignee: **Taylor Made Golf Company, Inc.**, Carlsbad, CA (US)

(**) Term: **15 Years**

(21) Appl. No.: **29/769,090**

(22) Filed: **Feb. 3, 2021**

(51) **LOC (14) Cl.** **21-02**

(52) **U.S. Cl.**
USPC **D21/736**

(58) **Field of Classification Search**
USPC D21/736–746
CPC A63B 53/00; A63B 53/04; A63B 53/007; A63B 53/065; A63B 53/0487; A63B 60/00; A63B 60/46
See application file for complete search history.

(56) **References Cited**

U.S. PATENT DOCUMENTS

D380,029	S		6/1997	Anderson	
D407,445	S		3/1999	Rollinson et al.	
D461,514	S	*	8/2002	Tang	D21/742
D461,861	S	*	8/2002	Tang	D21/742
D485,321	S		1/2004	Breier et al.	
D520,582	S		5/2006	Zelnicek	
D561,854	S		2/2008	Morris	
D571,880	S		6/2008	Ban et al.	
D584,782	S	*	1/2009	Barez	D21/759
D584,783	S	*	1/2009	Barez	D21/759
D584,784	S	*	1/2009	Barez	D21/759
D622,337	S	*	8/2010	Kohno	D21/752
D623,711	S	*	9/2010	Kadoya	D21/752
D631,111	S	*	1/2011	Bennett	D21/752
D669,546	S	*	10/2012	Llewellyn	D21/752
D669,948	S	*	10/2012	Sakamoto	D21/752
D669,949	S	*	10/2012	Sakamoto	D21/752
D715,388	S	*	10/2014	Serrano	D21/743

(Continued)

OTHER PUBLICATIONS

Pxg putter google search; google.com; Nov. 23, 2022.*

(Continued)

Primary Examiner — Mitchell I. Siegel
(74) *Attorney, Agent, or Firm* — Klarquist Sparkman, LLP

(57) **CLAIM**

We claim the ornamental design for a golf putter, as shown and described.

DESCRIPTION

FIG. **1** is a perspective view of a golf club head, as viewed from above, the rear and one side, according to one embodiment.
FIG. **2** is a front elevation view of a golf club head of FIG. **1**.
FIG. **3** is a rear elevation view of the golf club head of FIG. **1**.
FIG. **4** is a side elevation view of a toe side of the golf club head of FIG. **1**.
FIG. **5** is a side elevation view of a heel side of the golf club head of FIG. **1**.
FIG. **6** is a top plan view of the golf club head of FIG. **1**.
FIG. **7** is a bottom plan view of the golf club head of FIG. **1**; and,
FIG. **8** is a perspective view of the golf club head of FIG. **1**, as viewed from below, the front and one side.
The broken lines in the drawings are for purpose of illustrating environmental structure as well as portions of the design that form no part of the present claimed design.

1 Claim, 8 Drawing Sheets

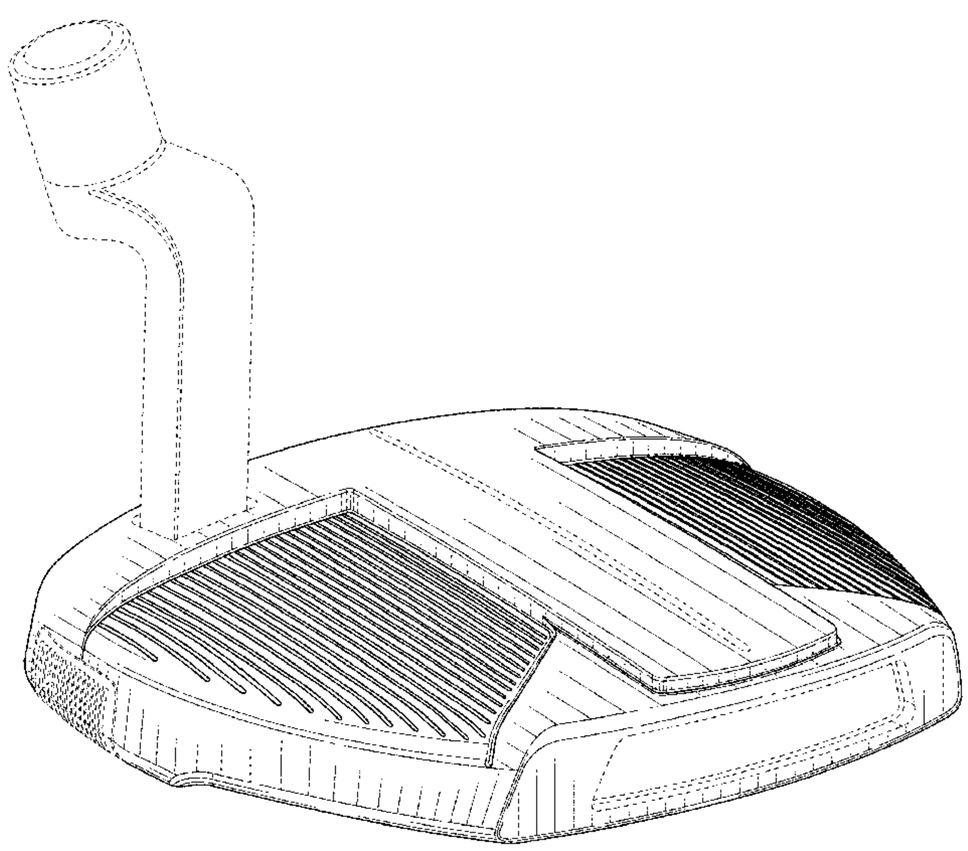

(56) **References Cited**

U.S. PATENT DOCUMENTS

D720,023	S		12/2014	Rollinson	
D720,411	S		12/2014	Rollinson	
D720,412	S		12/2014	Rollinson	
D725,729	S	*	3/2015	Song	D21/752
D726,848	S	*	4/2015	Song	D21/752
D736,876	S		8/2015	Rollinson	
D774,607	S	*	12/2016	Serrano	D21/743
D774,610	S	*	12/2016	Serrano	D21/744
D811,503	S	*	2/2018	Bacon	D21/752
D814,582	S	*	4/2018	Bacon	D21/752
D814,583	S	*	4/2018	Stokke	D21/752
D815,223	S	*	4/2018	Stokke	D21/752
D825,013	S	*	8/2018	Milleman	D21/752
D832,950	S	*	11/2018	Serrano	D21/746
D840,482	S	*	2/2019	Serrano	D21/736
D867,502	S	*	11/2019	Song	D21/752
D879,222	S	*	3/2020	Serrano	D21/742
D892,956	S	*	8/2020	Clarke	D21/744
D895,041	S	*	9/2020	Chun	D21/752
D907,729	S	*	1/2021	Kim	D21/752
D909,507	S	*	2/2021	Rollinson	D21/736
D909,508	S	*	2/2021	Rollinson	D21/743
D916,221	S	*	4/2021	Bacon	D21/752
D917,644	S	*	4/2021	Wang	D21/752
D921,142	S	*	6/2021	Song	D21/752
D925,674	S	*	7/2021	Song	D21/752
D928,259	S	*	8/2021	Andrews	D21/736
D929,516	S	*	8/2021	Wang	D21/744
D930,776	S	*	9/2021	Song	D21/752
D931,391	S	*	9/2021	Chun	D21/752
D931,393	S	*	9/2021	Song	D21/752
D934,363	S	*	10/2021	Serrano	D21/746
D954,873	S	*	6/2022	Andrews	D21/736
D955,518	S	*	6/2022	Jacobson	D21/752
D957,555	S	*	7/2022	Greer	D21/752
D958,276	S	*	7/2022	Woodward	D21/752
D960,270	S	*	8/2022	Wang	D21/744
D963,773	S	*	9/2022	Milleman	D21/752
D966,449	S	*	10/2022	Bruschi	D21/736

OTHER PUBLICATIONS

Putter google search; google search; Nov. 23, 2022.*
pxg.com; Nov. 23, 2022.*
taylormade.com; Nov. 23, 2022.*

* cited by examiner

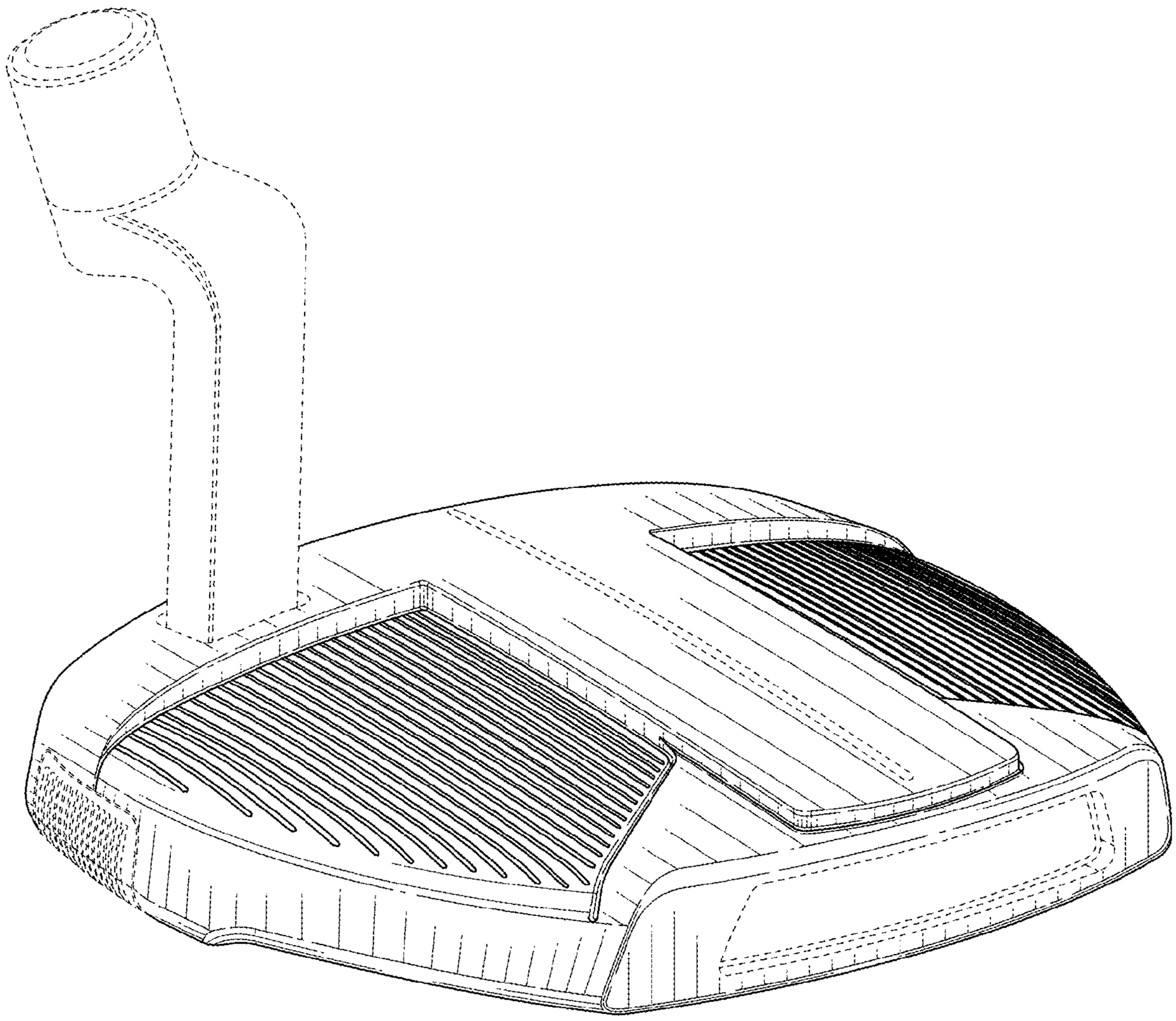

FIG. 1

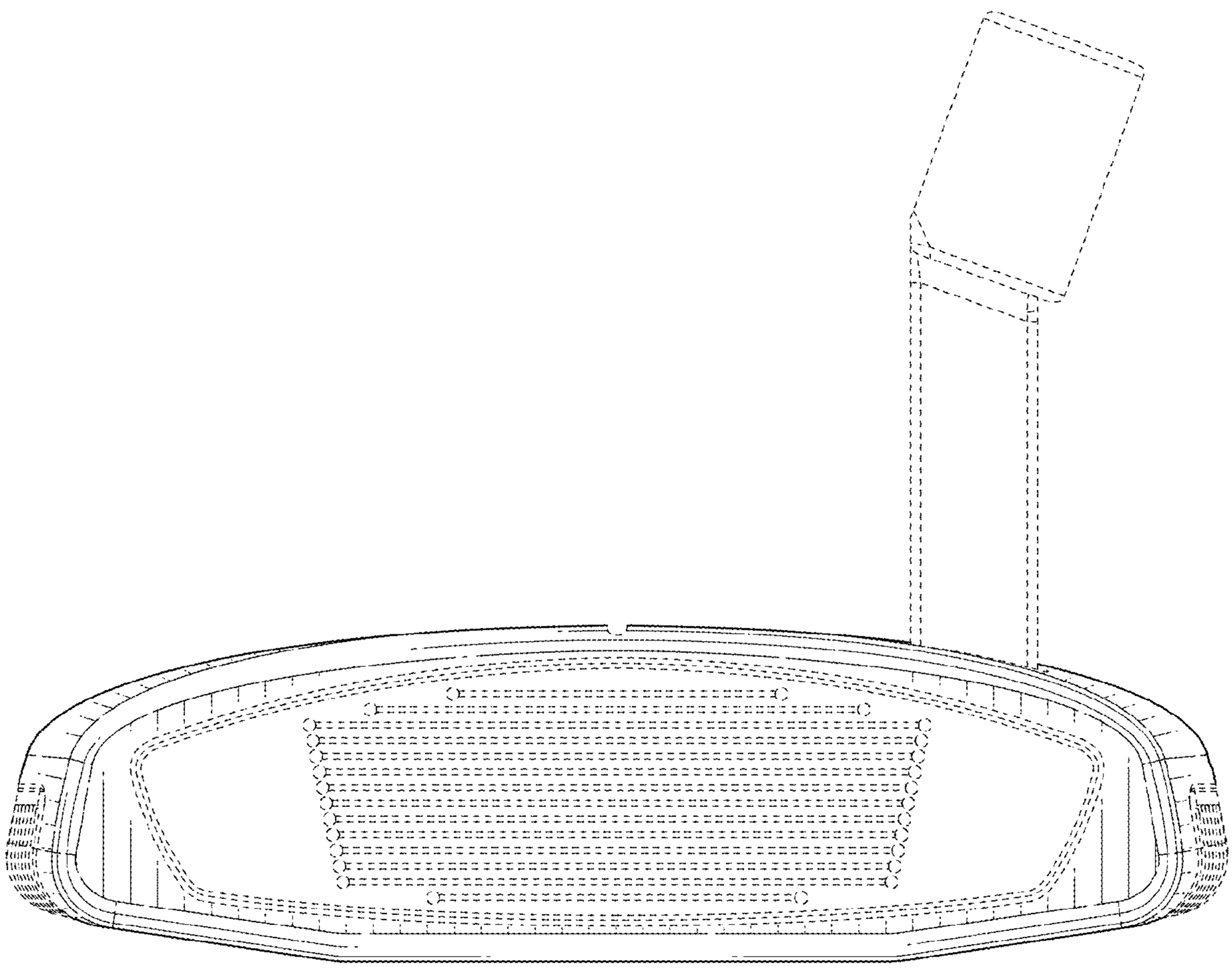

FIG. 2

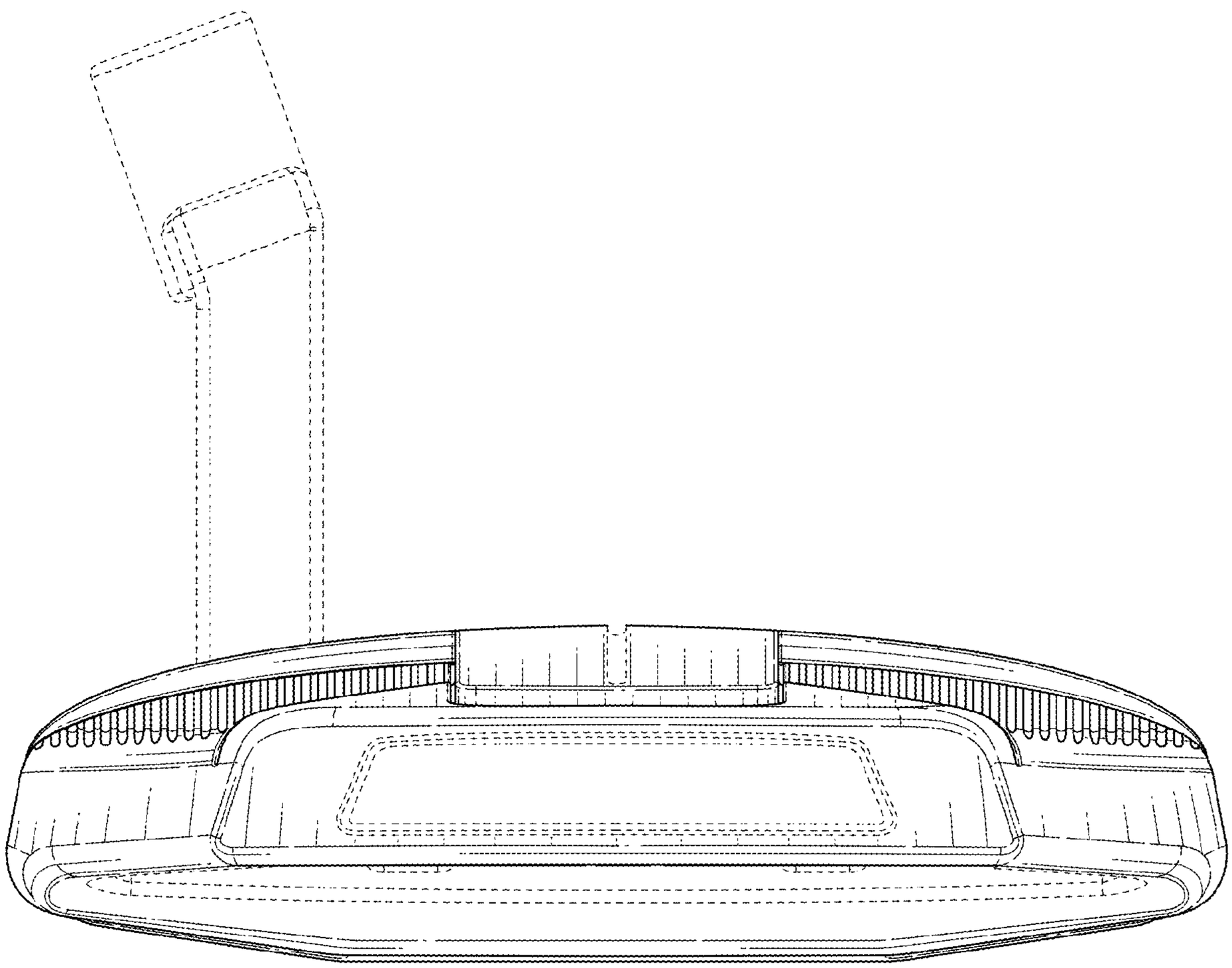

FIG. 3

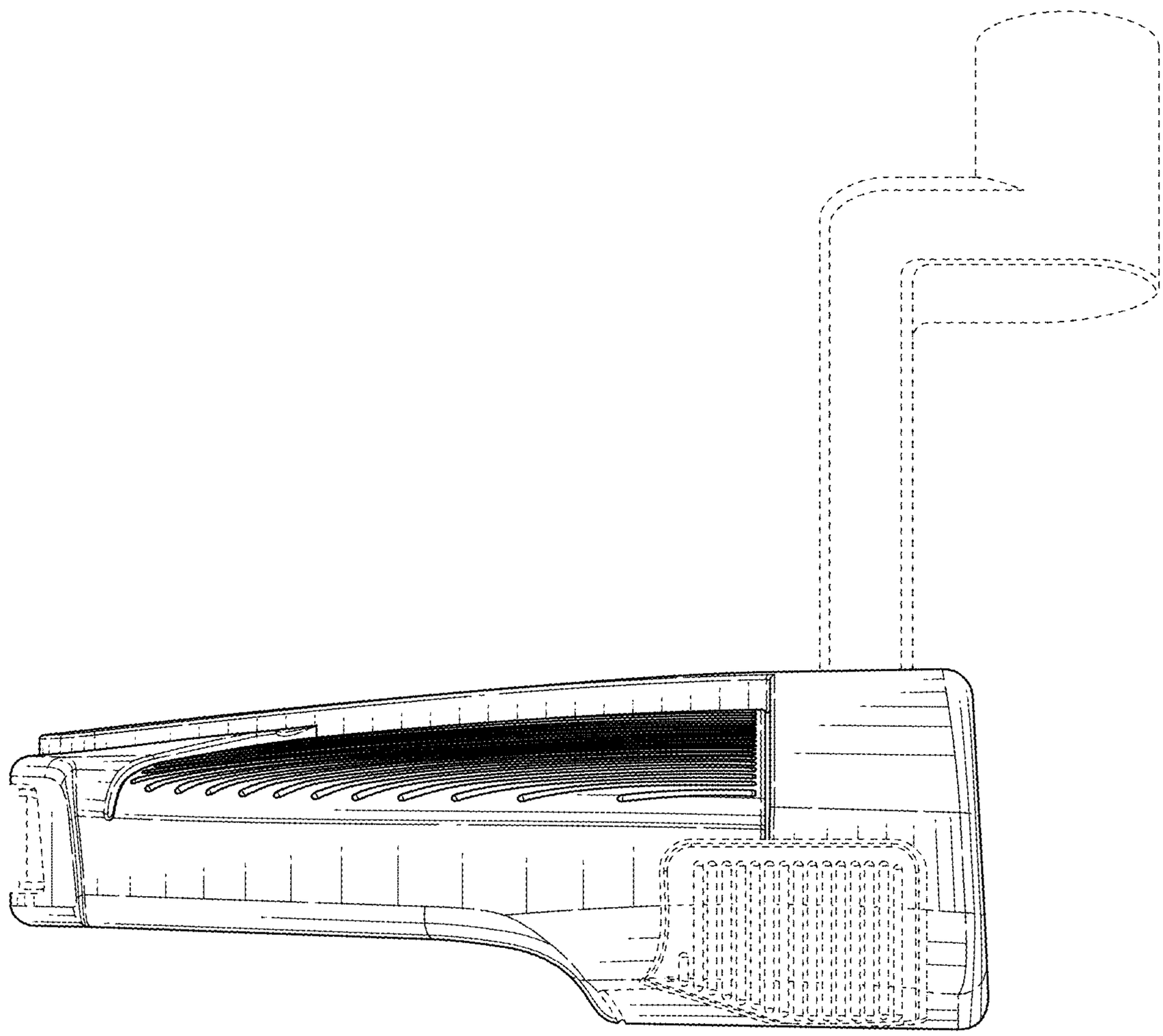

FIG. 4

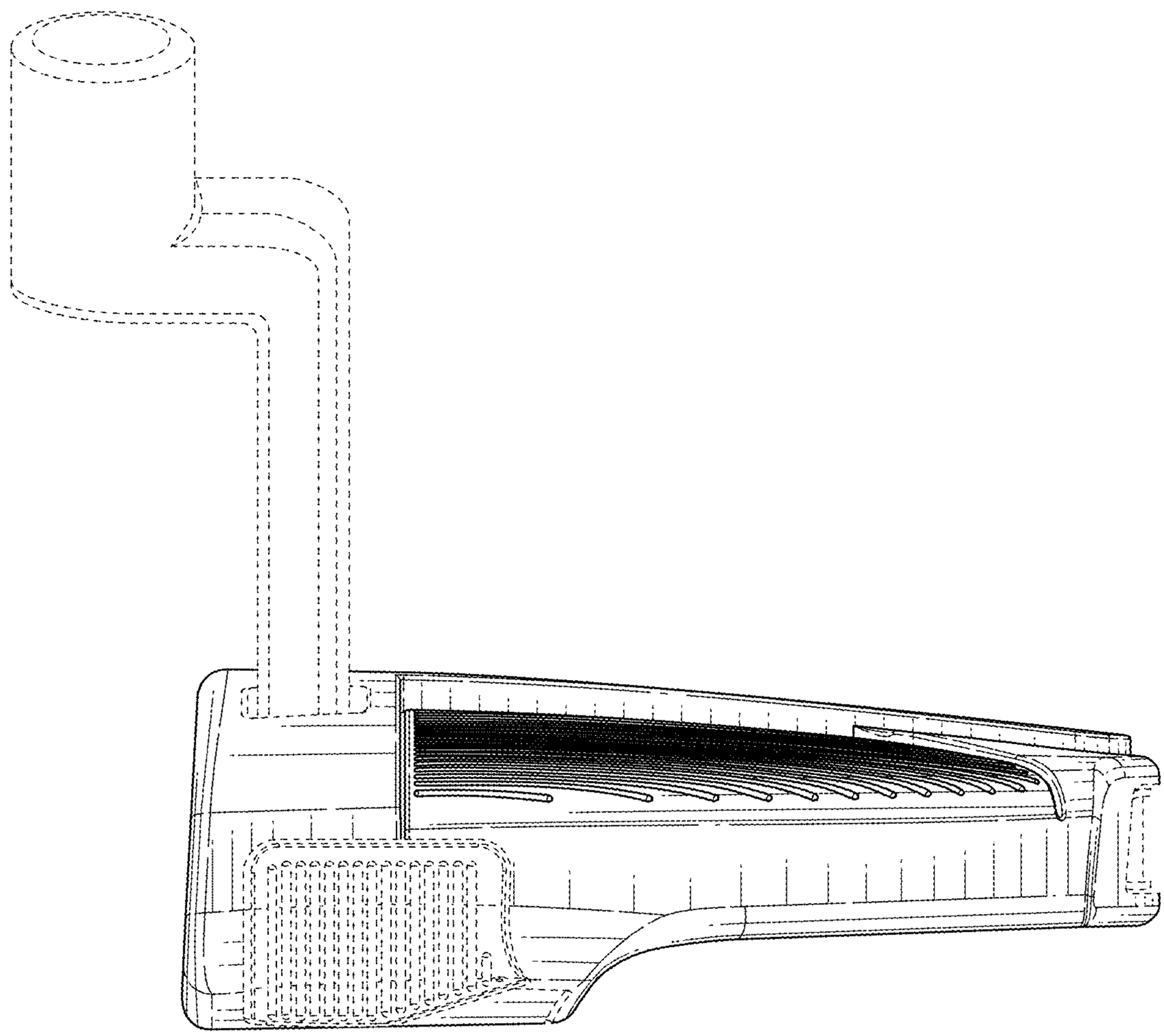

FIG. 5

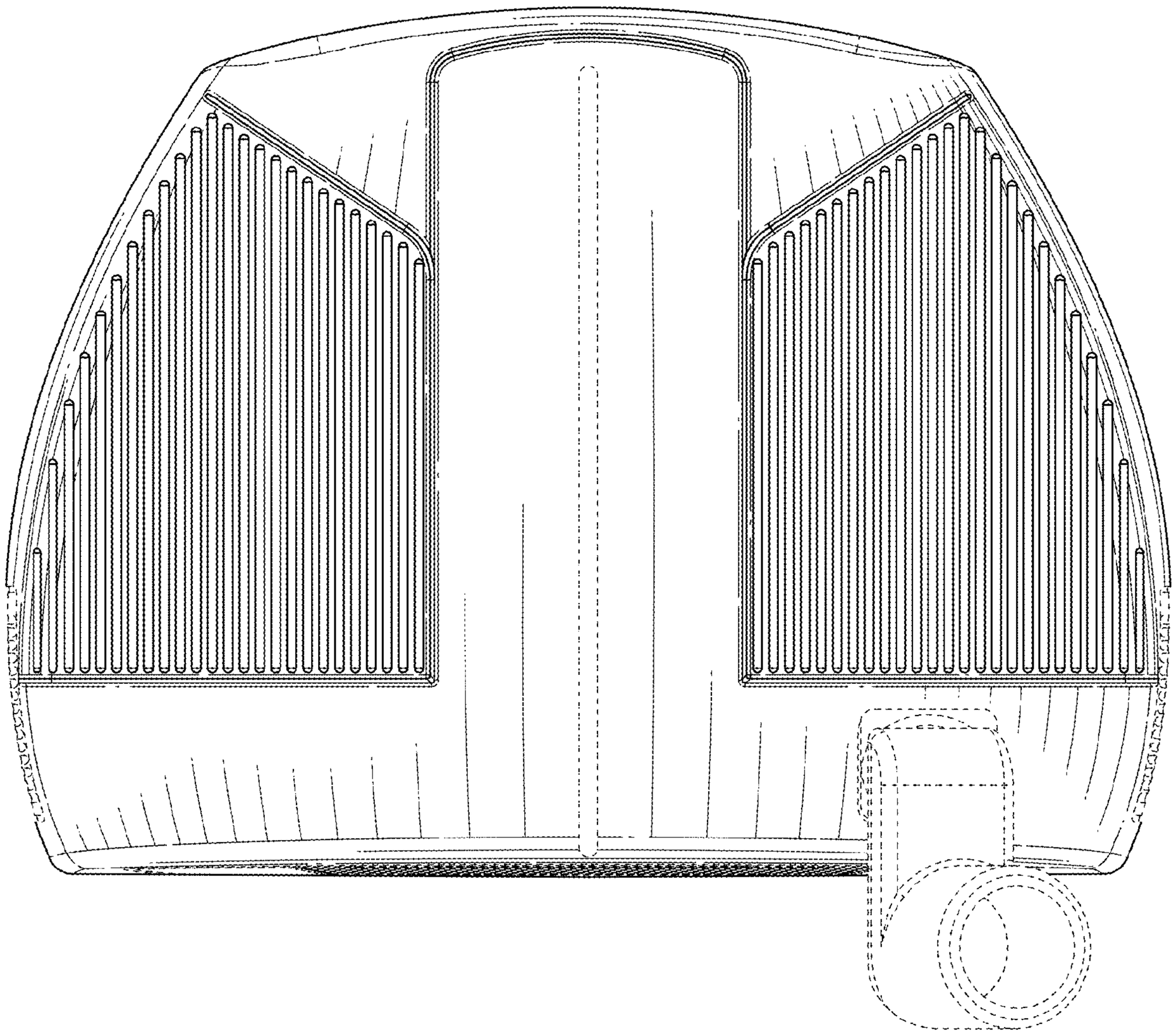

FIG. 6

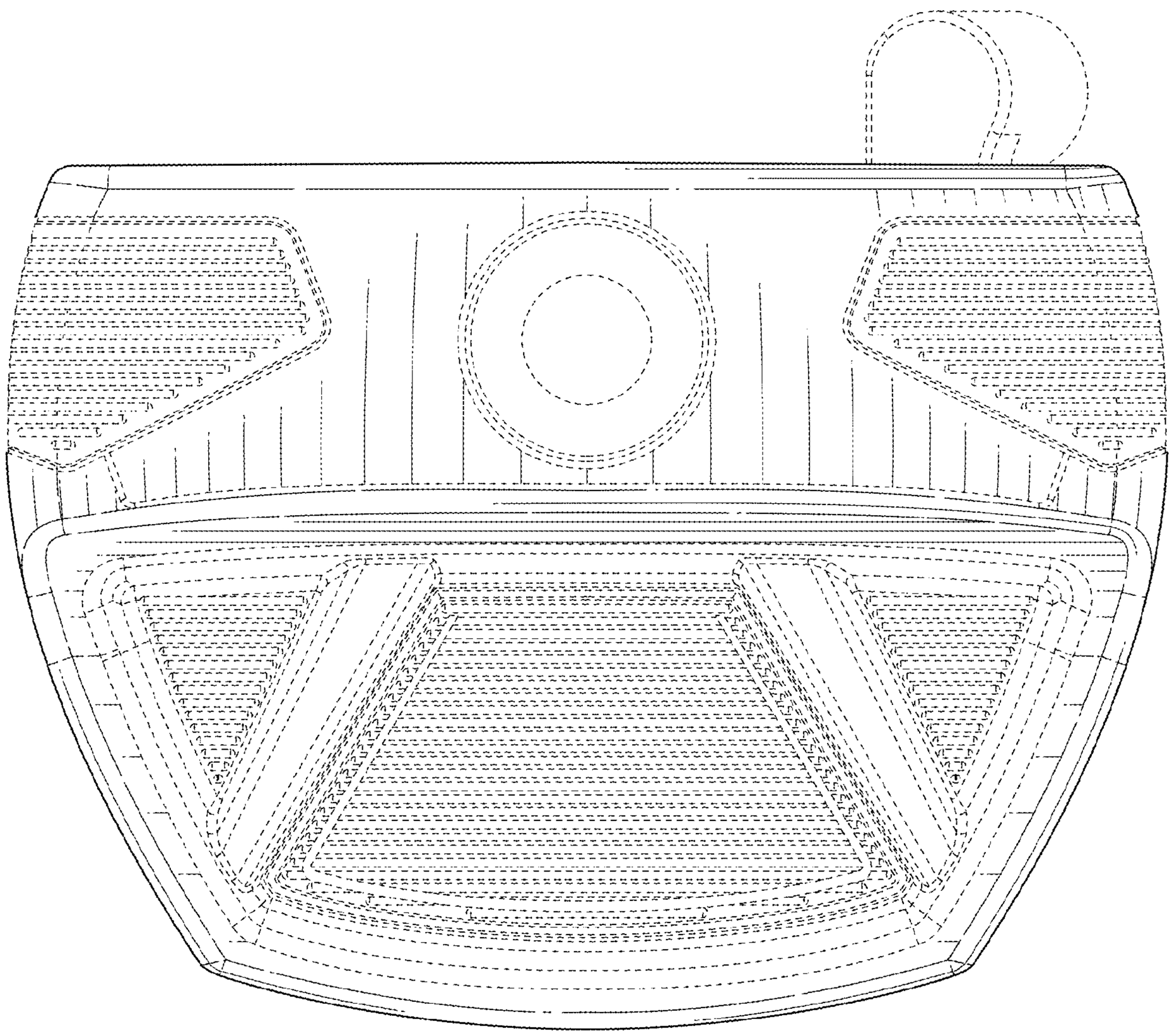

FIG. 7

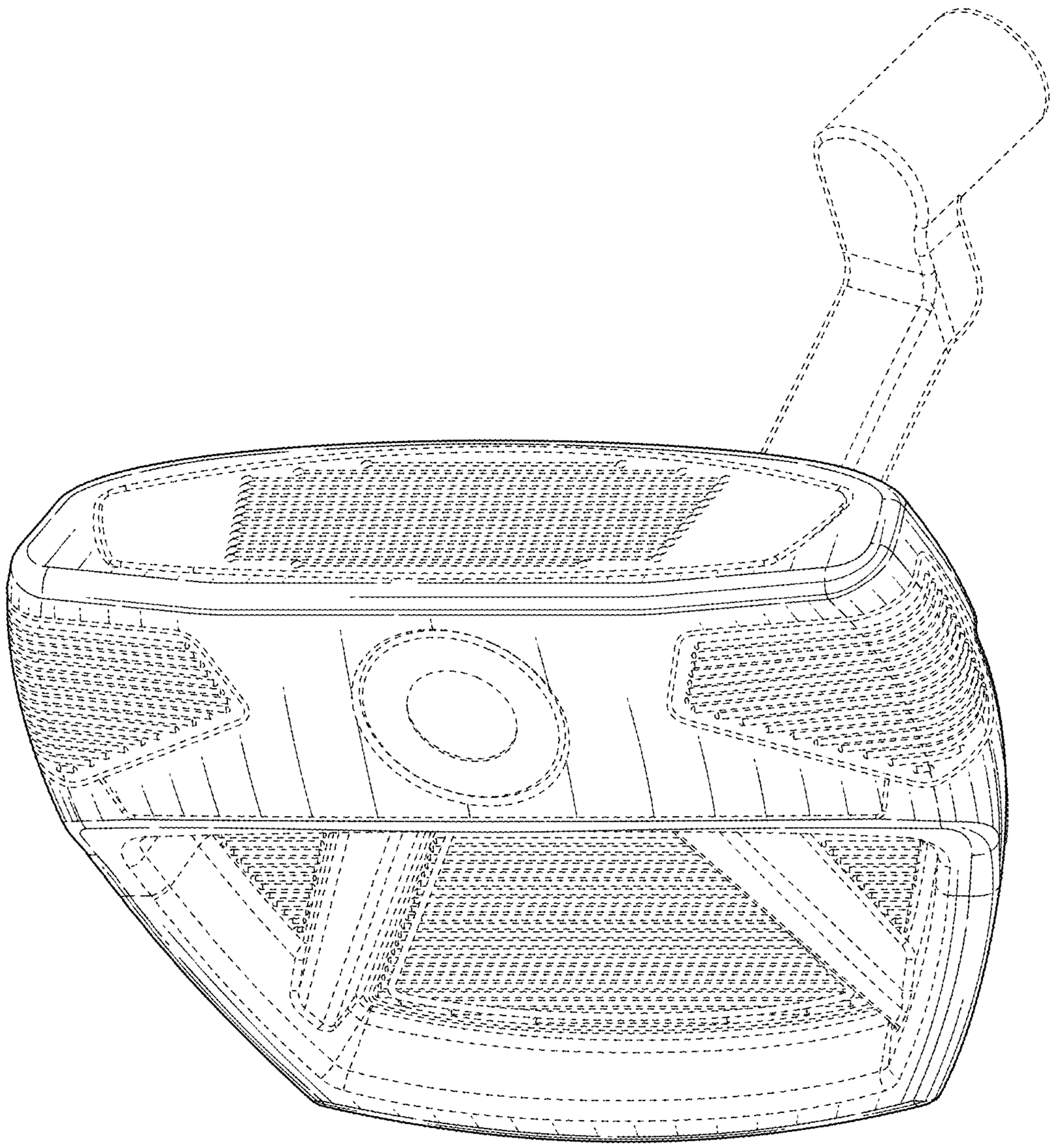

FIG. 8