US00D984868S

(12) United States Design Patent

Chen

(10) Patent No.: US D984,868 S
(45) Date of Patent: ** May 2, 2023

(54) **EXPANSION TENSIONER**

(71) Applicant: **Mianlong Chen**, Xiamen (CN)

(72) Inventor: **Mianlong Chen**, Xiamen (CN)

(**) Term: **15 Years**

(21) Appl. No.: **29/786,833**

(22) Filed: **Jun. 2, 2021**

(51) **LOC (14) Cl.** **08-08**

(52) **U.S. Cl.**
USPC **D8/356**

(58) **Field of Classification Search**
USPC D8/354, 355, 356, 382, 387, 44
CPC D07B 9/00; F16G 11/105; F16G 11/106; F16G 11/025; F16G 11/04; F16B 2/065; F16B 2/14
See application file for complete search history.

(56) **References Cited**

U.S. PATENT DOCUMENTS

3,852,850	A *	12/1974	Filhaber	F16G 11/048	24/115 M
3,952,377	A *	4/1976	Morell	E04C 5/122	403/374.2
5,015,023	A *	5/1991	Hall	F16G 11/048	294/102.1
5,369,849	A *	12/1994	De France	F16G 11/048	24/115 M
D423,913	S *	5/2000	Dougan, Jr.	F16G 11/025	D8/356
7,043,801	B2 *	5/2006	Toimil	F16G 11/106	24/136 R
D531,014	S *	10/2006	Arakawa	F16G 11/106	D8/383
D563,772	S *	3/2008	Durocher	F16G 11/048	D8/356
D814,269	S *	4/2018	Veilleux	F16G 11/042	D8/356
10,436,231	B2 *	10/2019	White	F16G 11/025	
11,018,481	B1 *	5/2021	Crompton	H02G 1/081	
11,391,344	B1 *	7/2022	Sargent	D07B 9/00	
2018/0030832	A1 *	2/2018	Abreu	E21D 21/008	
2020/0002947	A1 *	1/2020	Hachisuka	D07B 9/00	
2021/0254340	A1 *	8/2021	Winstörfer	F16G 11/042	

* cited by examiner

Primary Examiner — Philip S Hyder
(74) *Attorney, Agent, or Firm* — Bayramoglu Law Offices LLC

(57) **CLAIM**

The ornamental design for an expansion tensioner, as shown and described.

DESCRIPTION

FIG. **1** is a bottom perspective view of an expansion tensioner showing my new design;
FIG. **2** is a front view thereof;
FIG. **3** is a rear view thereof;
FIG. **4** is a right side view thereof;
FIG. **5** is a left side view thereof;
FIG. **6** is a bottom view thereof;
FIG. **7** is a top view thereof; and,
FIG. **8** is a top perspective view thereof.

1 Claim, 8 Drawing Sheets

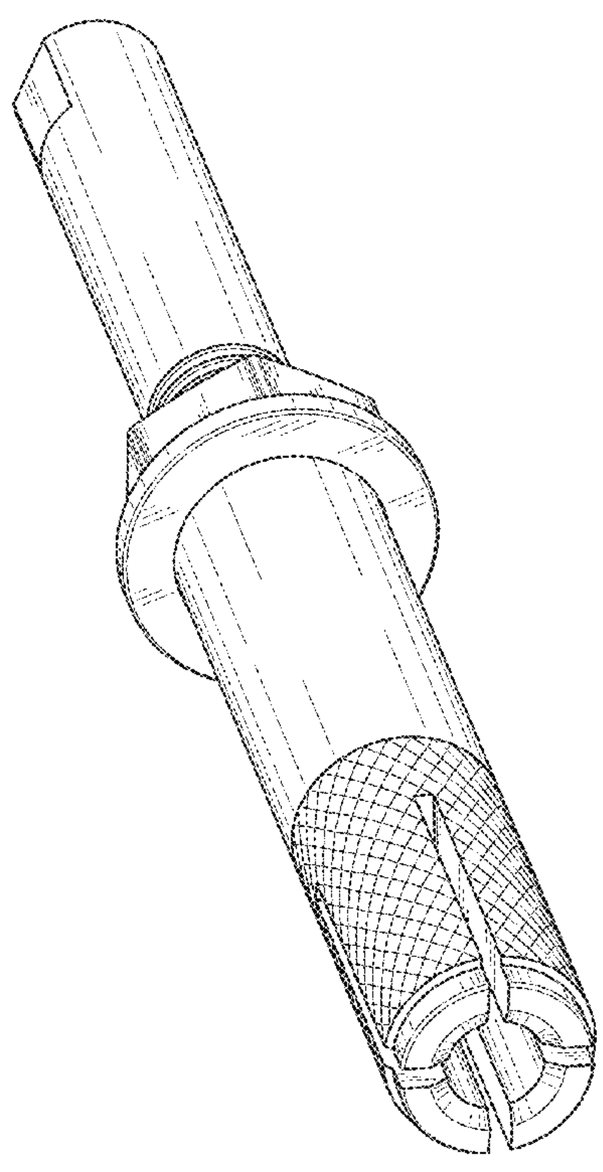

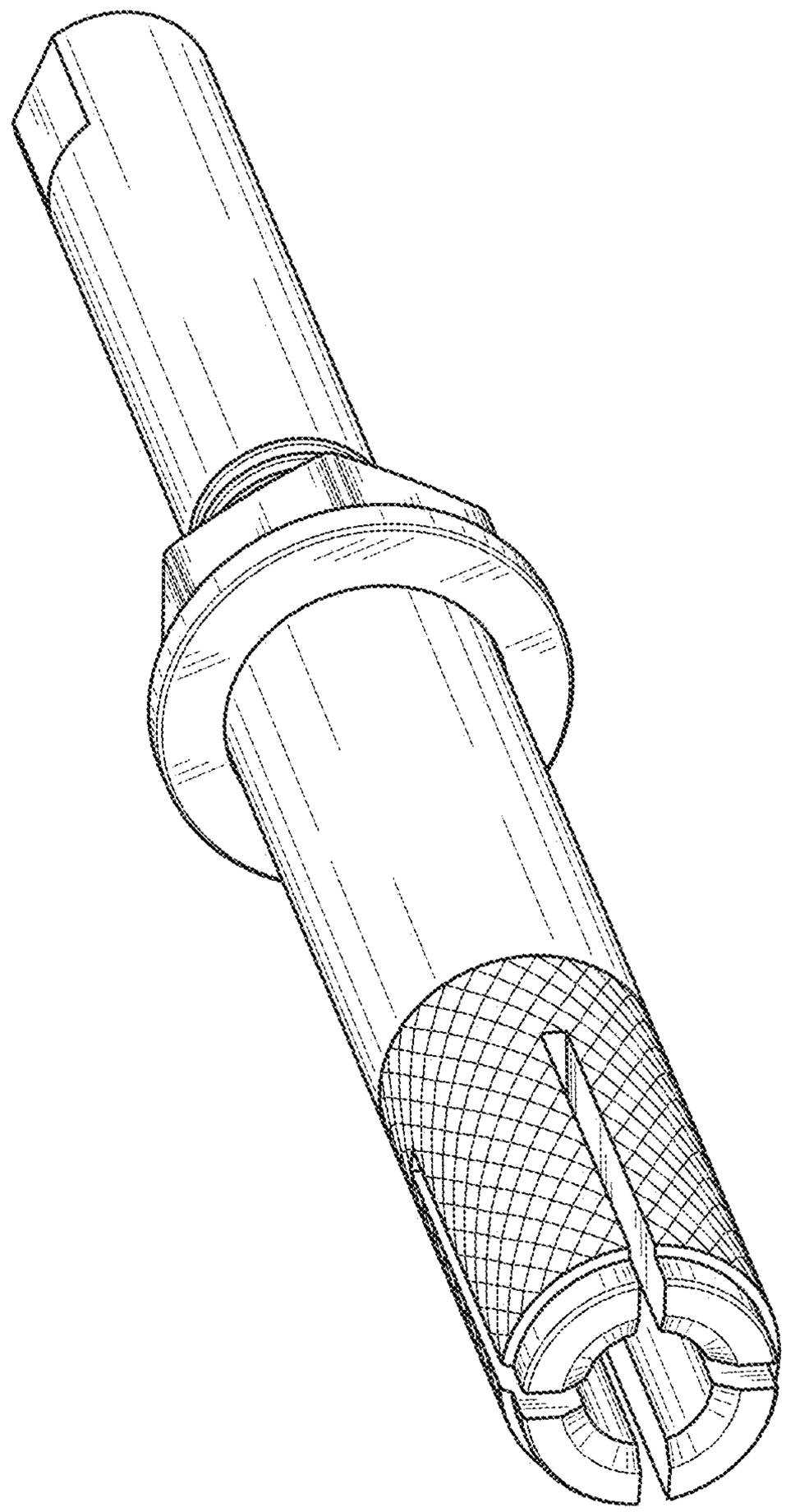

Fig. 1

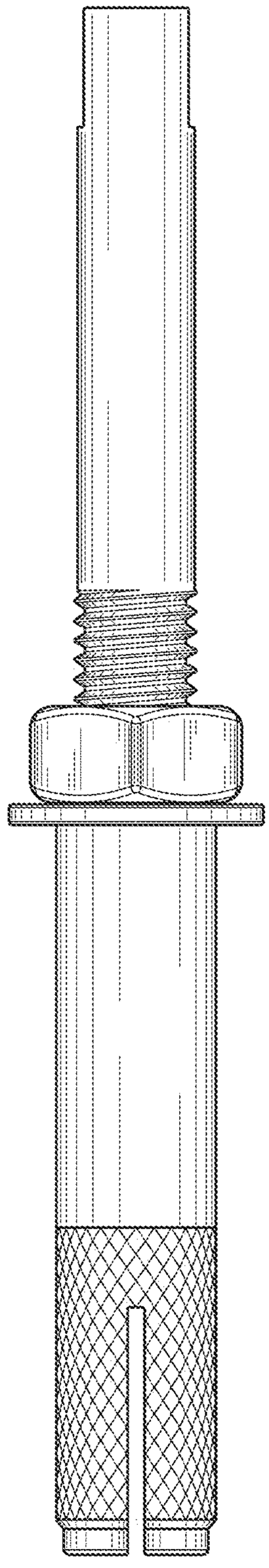

Fig. 2

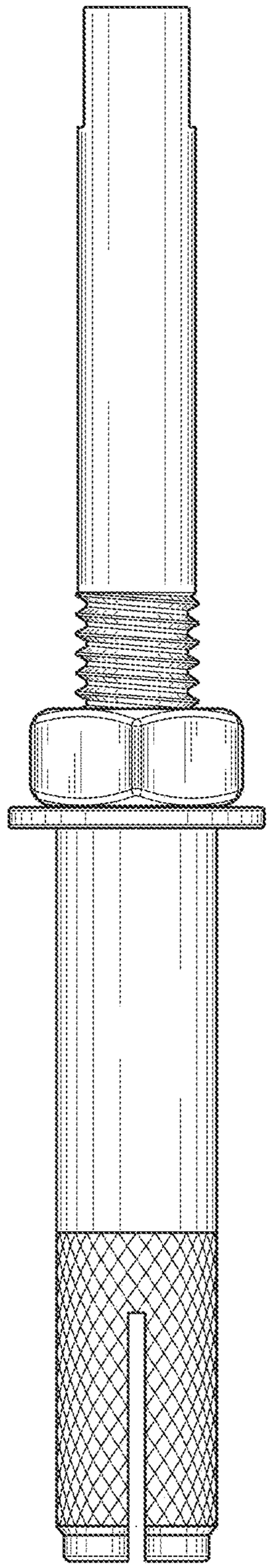

Fig. 3

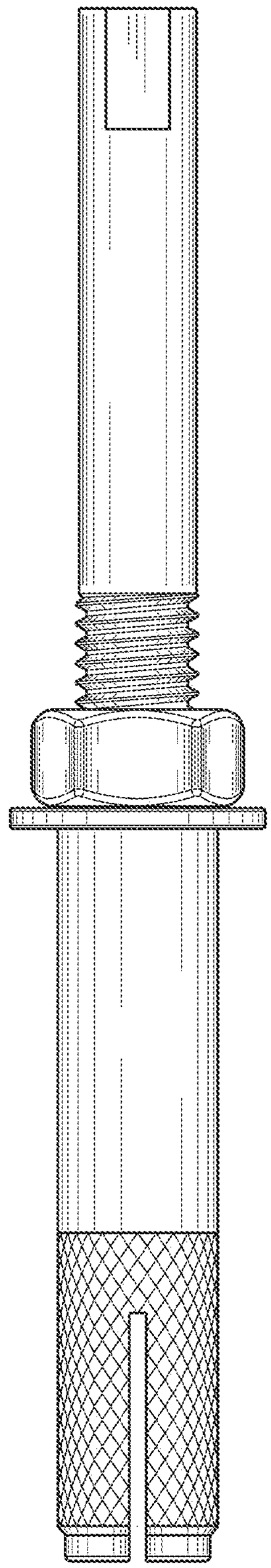

Fig. 4

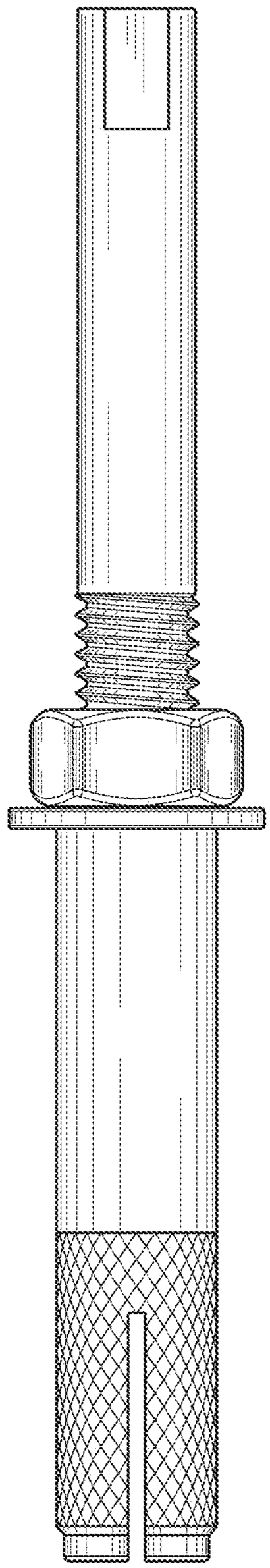

Fig. 5

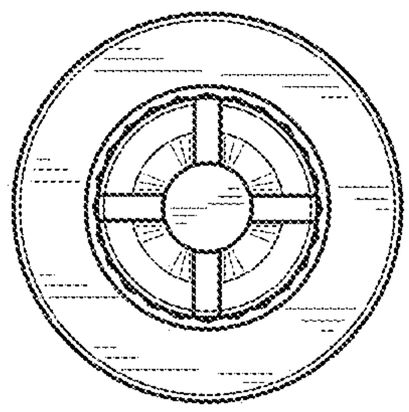

Fig. 6

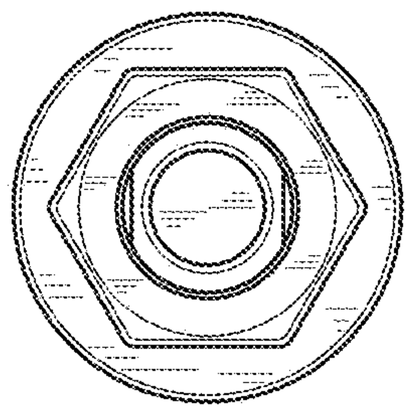

Fig. 7

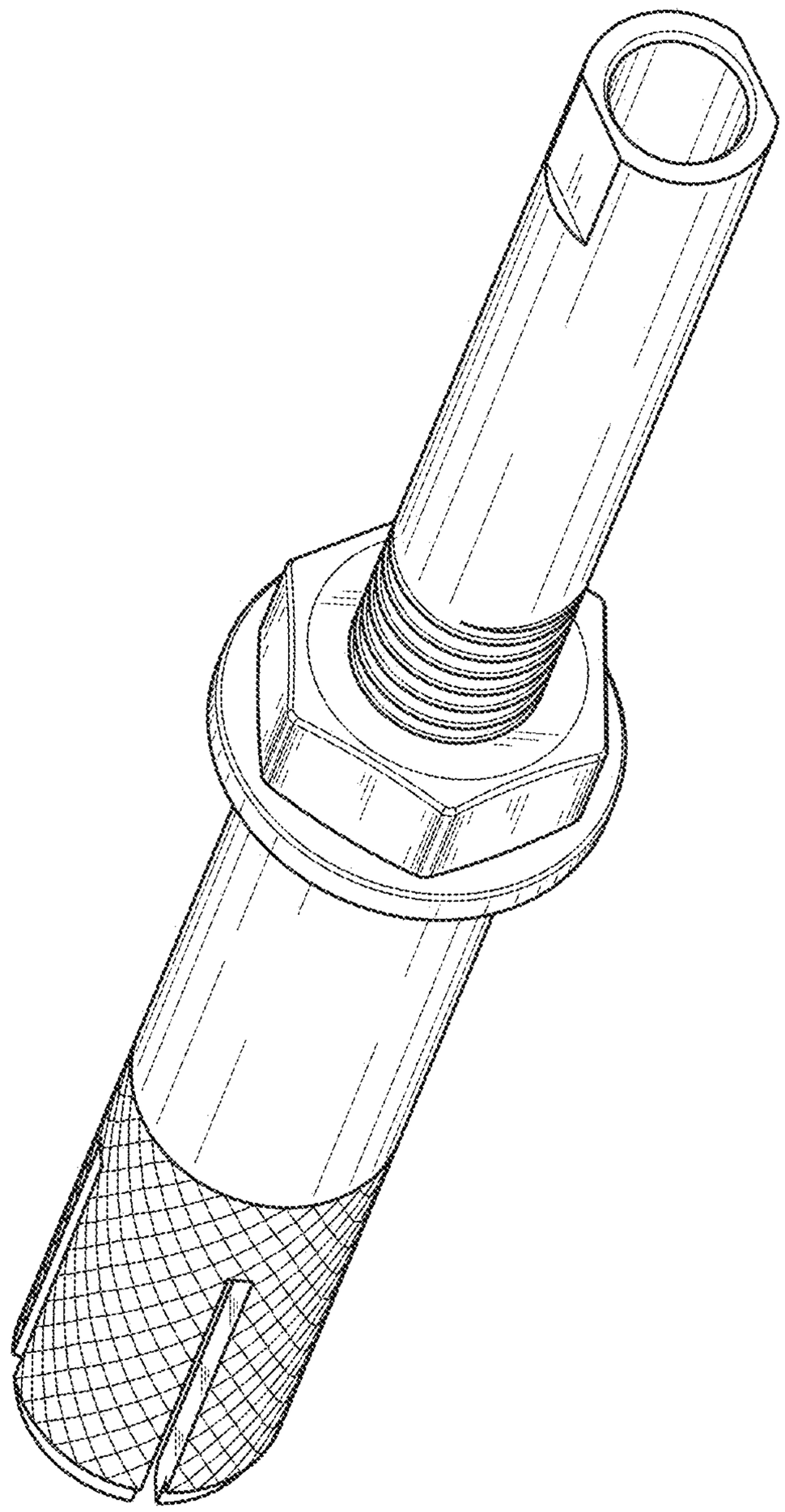

Fig. 8