US00D984650S

(12) United States Design Patent

Dixit et al.

(10) Patent No.: US D984,650 S
(45) Date of Patent: ** *Apr. 25, 2023

(54) **EXTERNAL NEUROSTIMULATOR**

(71) Applicant: **Nevro Corp.**, Redwood City, CA (US)

(72) Inventors: **Apratim Dixit**, Menlo Park, CA (US); **Ivan Tzvetanov**, Kallua-Kona, HI (US); **Cameron Karamian**, Costa de Caza, CA (US); **Keith Daniel Alsberg**, Evanston, IL (US); **Jeremiah Peter O'Leary**, Chicago, IL (US); **Gary Harlan Paulsen**, Chicago, IL (US); **Omid Mashhadi**, Palo Alto, CA (US)

(73) Assignee: **Nevro Corp.**, Redwood City, CA (US)

(*) Notice: This patent is subject to a terminal disclaimer.

(**) Term: **15 Years**

(21) Appl. No.: **29/774,995**

(22) Filed: **Mar. 19, 2021**

(51) **LOC (14) Cl.** **24-02**

(52) **U.S. Cl.**
USPC **D24/187**

(58) **Field of Classification Search**
USPC D24/186, 187, 190, 191, 200, 214, 215; D10/81
CPC ... A61N 1/32; A61N 1/39; A61N 1/34; A61N 2/008
See application file for complete search history.

(56) **References Cited**

U.S. PATENT DOCUMENTS

D590,508	S	*	4/2009	Tupin, Jr. D24/186
D597,211	S	*	7/2009	Ewing D24/187
D739,035	S	*	9/2015	Tavidian D24/200
D821,593	S	*	6/2018	Perez D24/200
D886,303	S	*	6/2020	Huang D24/187

(Continued)

FOREIGN PATENT DOCUMENTS

DE 40302313.0 * 6/2003

OTHER PUBLICATIONS

New Neuromodulation System for the Treatment of Overactive Bladder. Online, published date Mar. 30, 2016. Retrieved on Aug. 3, 2022 from URL: https://www.medicaldesignandoutsourcing.com/new-neuromodulation-system-for-the-treatment-of-overactive-bladder/.*

Primary Examiner — Omeed Agilee
(74) *Attorney, Agent, or Firm* — Medler Ferro Woodhouse & Mills PLLC

(57) **CLAIM**

The ornamental design for an external neurostimulator, as shown and described.

DESCRIPTION

FIG. **1** is a top front perspective view of an external neurostimulator showing the claimed design in a closed configuration;
FIG. **2** is a bottom rear perspective view thereof;
FIG. **3** is a left side view thereof;
FIG. **4** is a front view thereof;
FIG. **5** is right side view thereof;
FIG. **6** is a rear view thereof;
FIG. **7** is a top view thereof;
FIG. **8** is a bottom view thereof;
FIG. **9** is a top front perspective view of the external neurostimulator showing the claimed design in an open configuration;
FIG. **10** is a bottom rear perspective view thereof;
FIG. **11** is a left side view thereof;
FIG. **12** is a front view thereof;
FIG. **13** is right side view thereof;
FIG. **14** is a rear view thereof;
FIG. **15** is a top view thereof; and,
FIG. **16** is a bottom view thereof.
The broken lines in the figures show portions of the external neurostimulator that form no part of the claimed design.

1 Claim, 16 Drawing Sheets

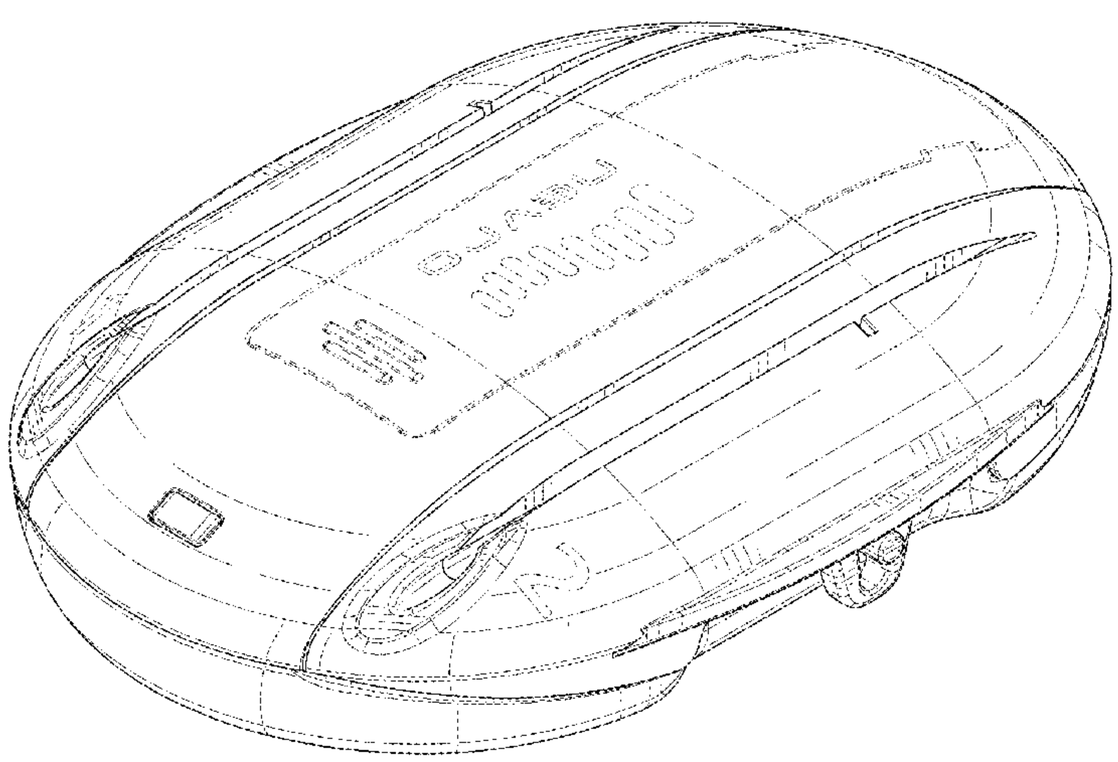

(56) **References Cited**

U.S. PATENT DOCUMENTS

D899,610	S	*	10/2020	Yang	D24/214
D904,629	S	*	12/2020	deBock	D24/200
D931,468	S	*	9/2021	Huang	D24/186
D948,728	S	*	4/2022	Park	D24/186
D952,852	S	*	5/2022	Deininger	D24/155
D952,853	S	*	5/2022	Clayton	D24/155
D958,784	S	*	7/2022	Cohen	D14/344
2004/0254610	A1	*	12/2004	Lin	A61N 1/32 607/46
2013/0116745	A1	*	5/2013	Fletcher	A61N 1/36075 607/46

* cited by examiner

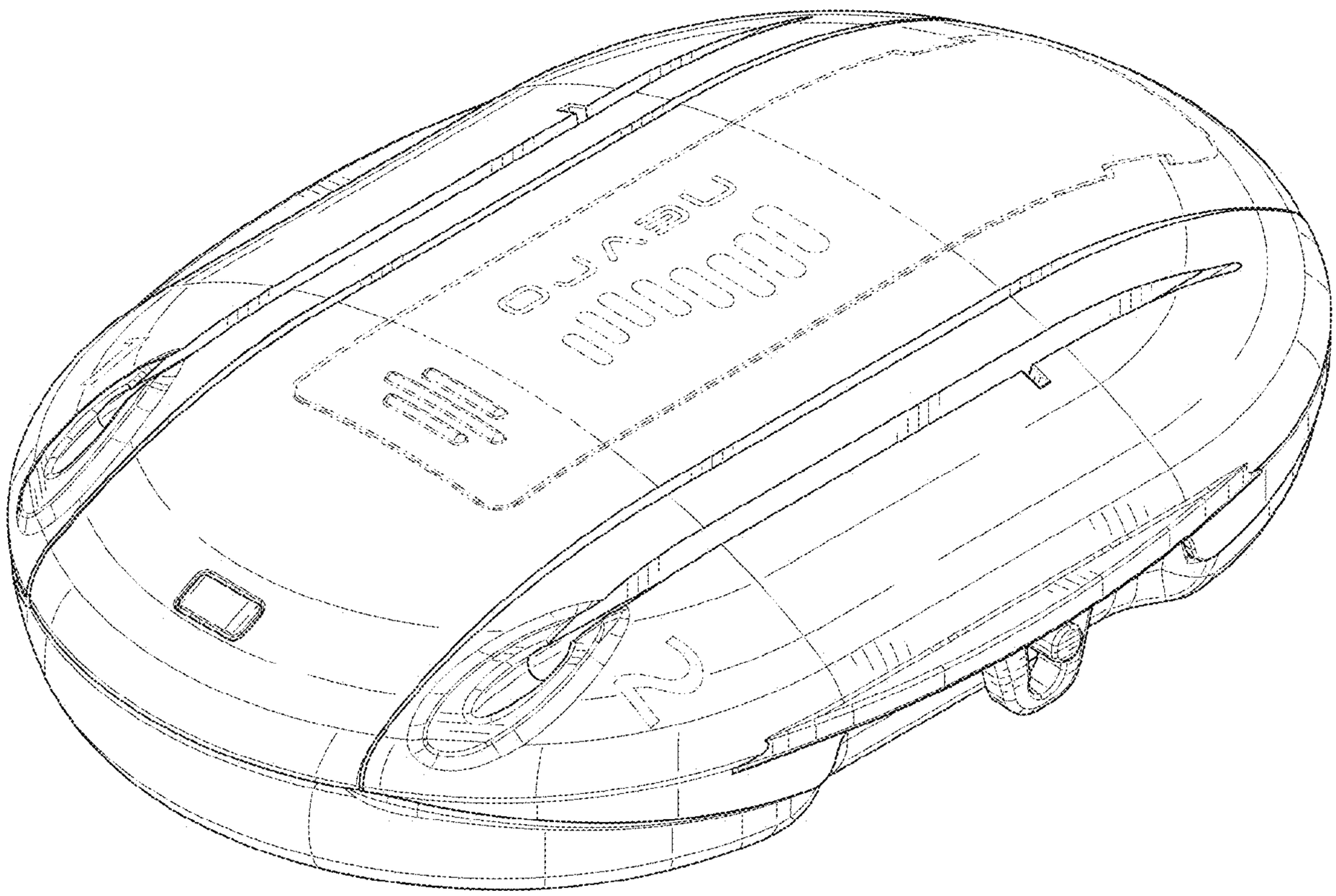

FIG. 1

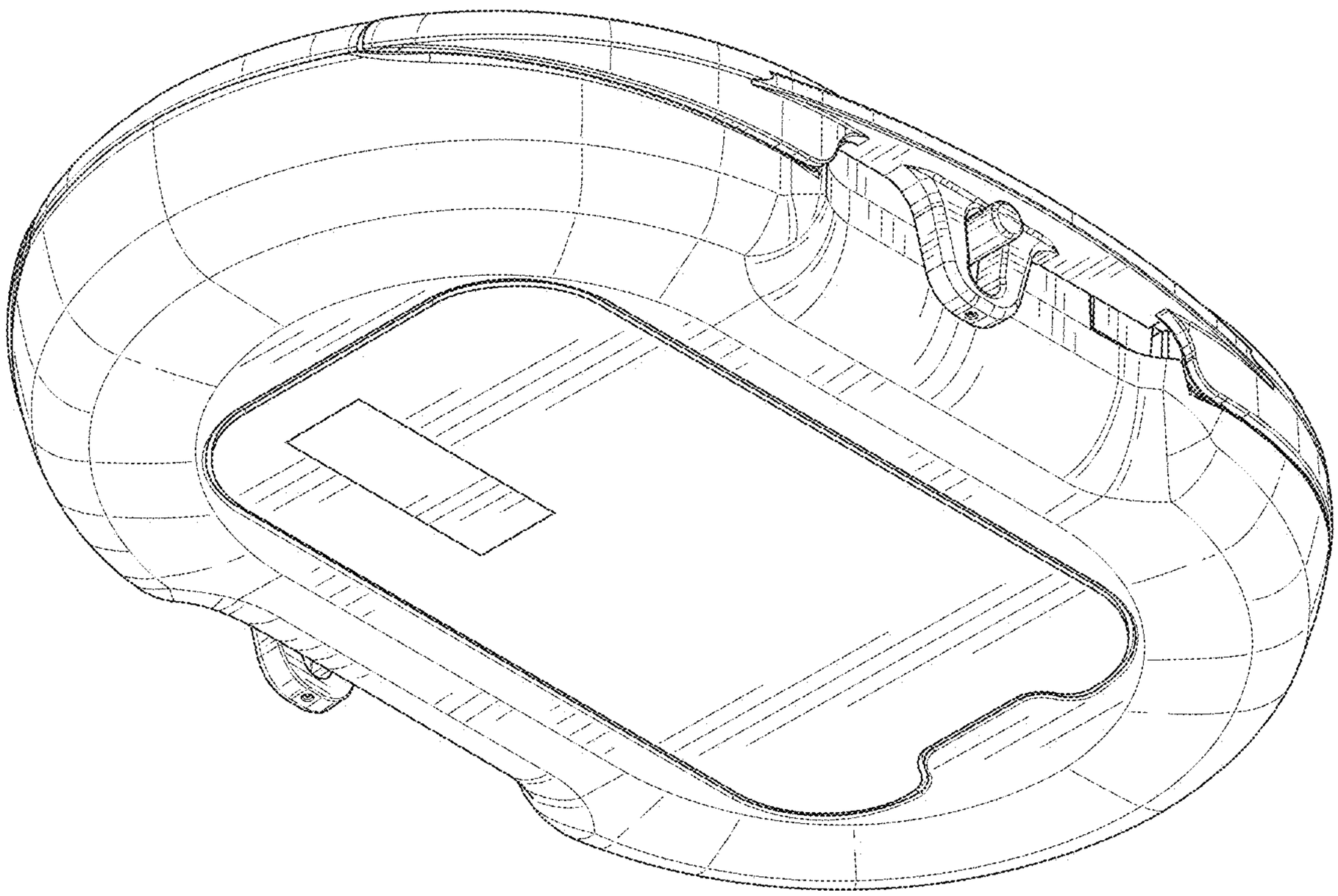

FIG. 2

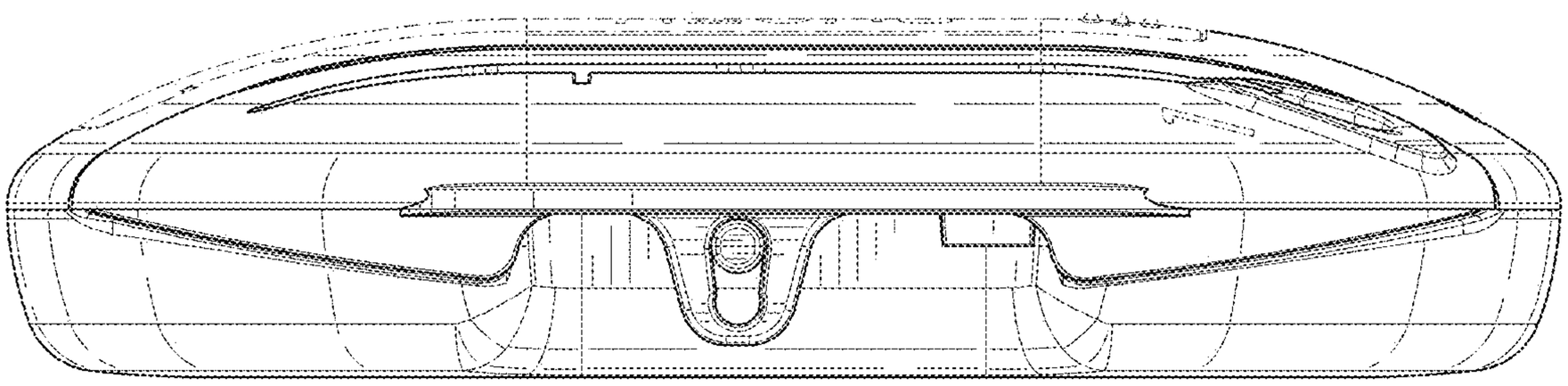

FIG. 3

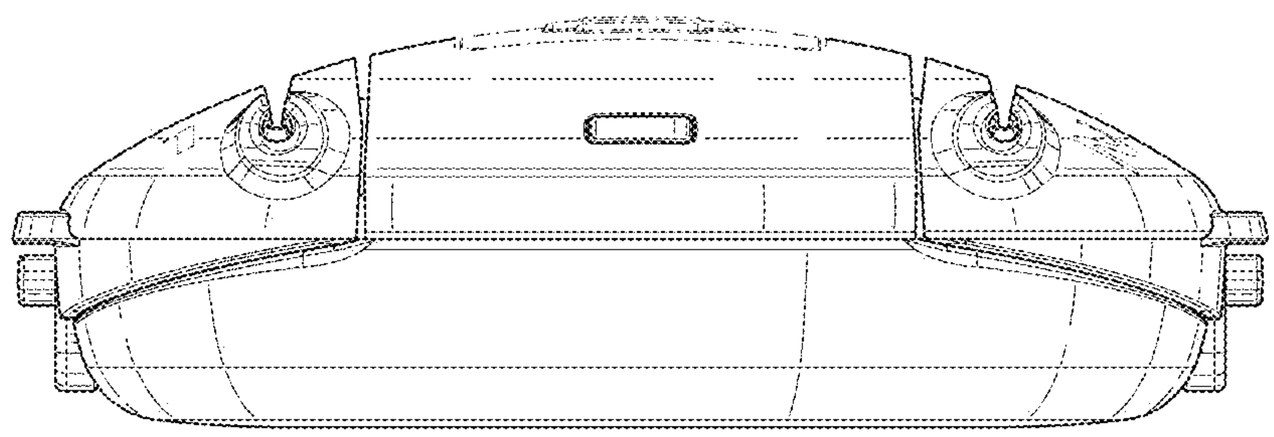

FIG. 4

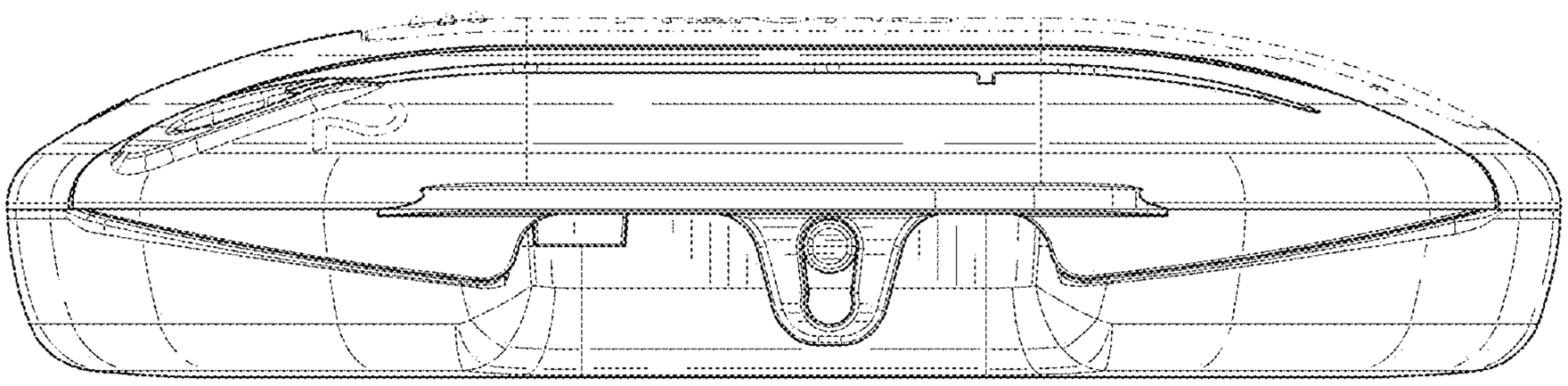

FIG. 5

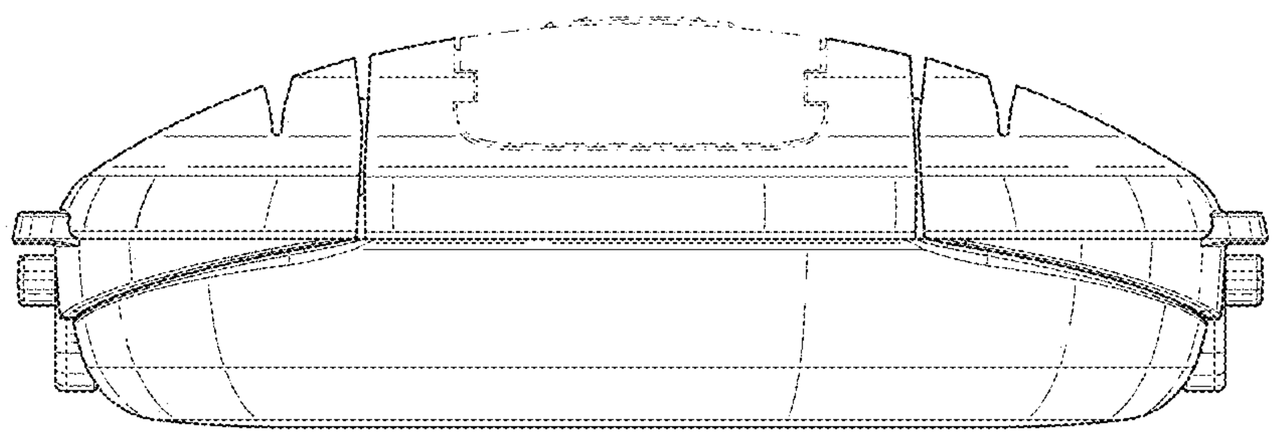

FIG. 6

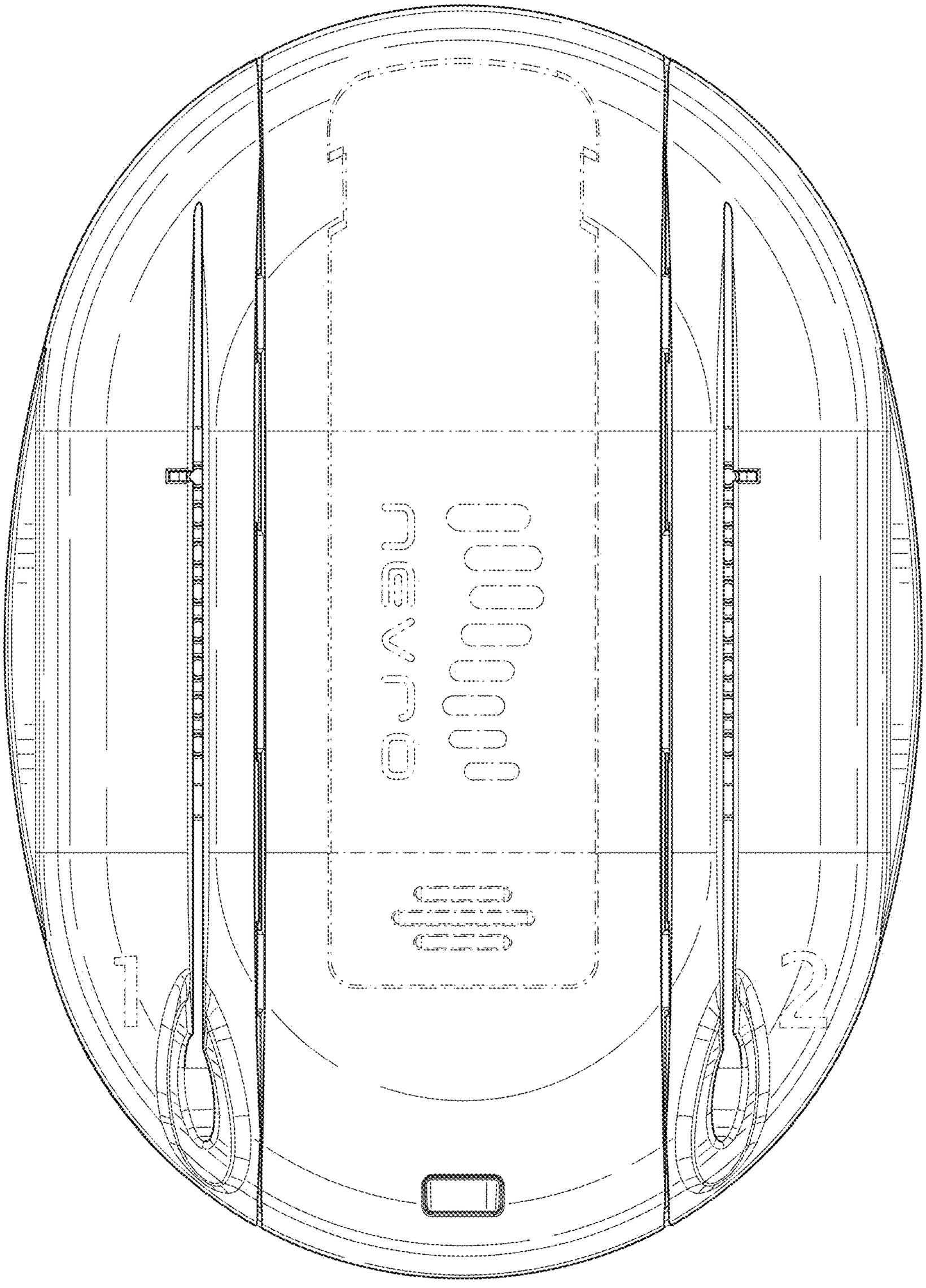

FIG. 7

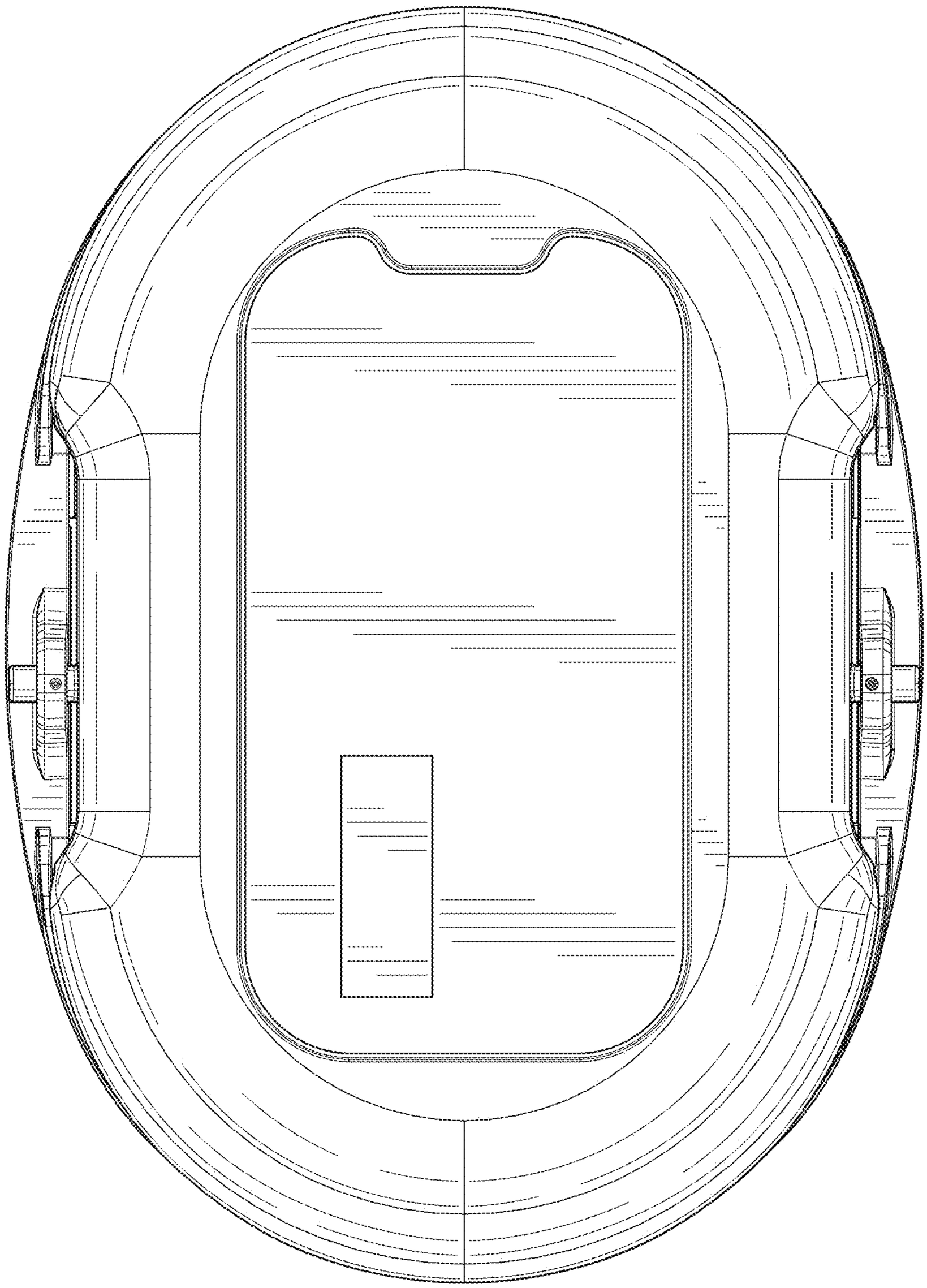

FIG. 8

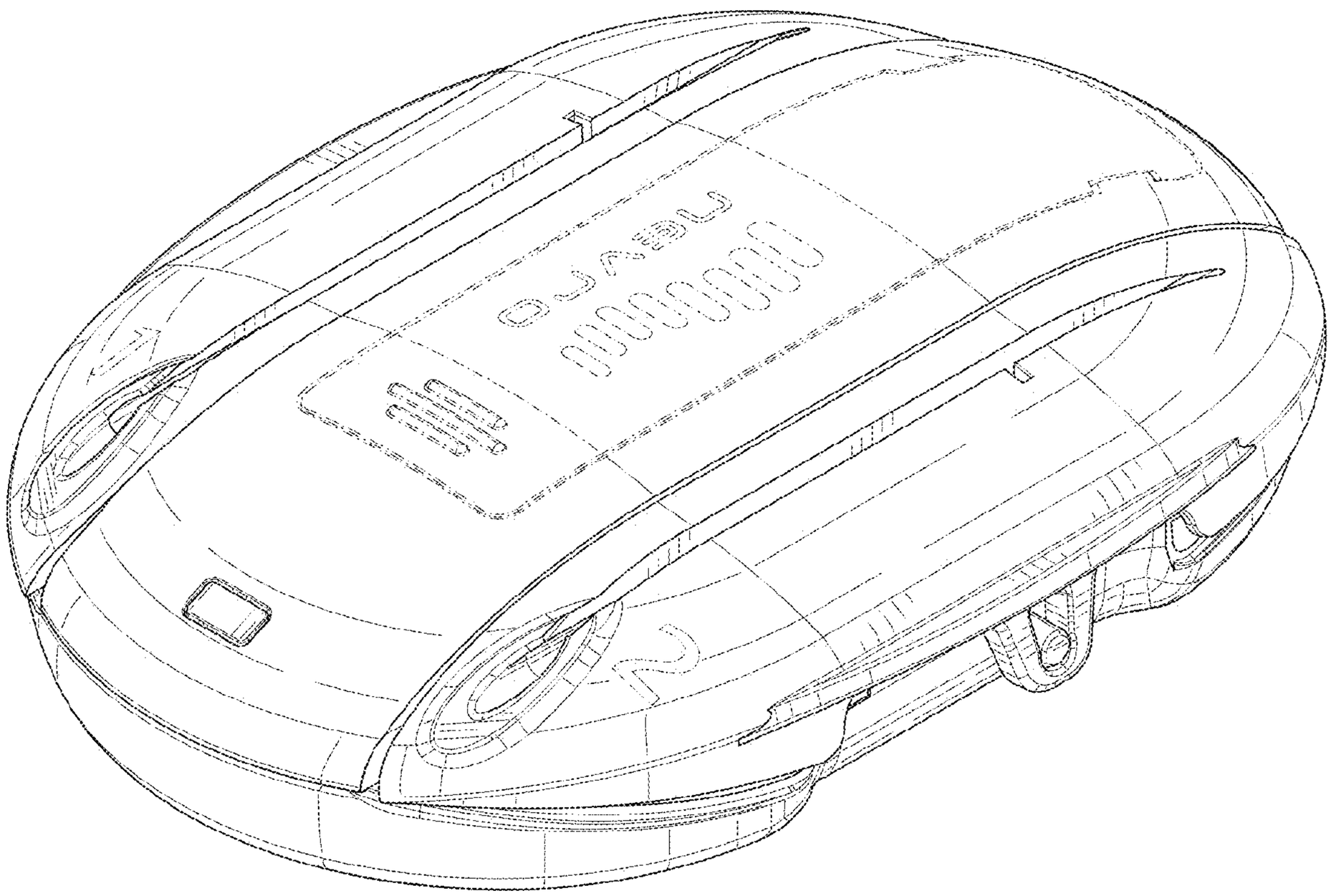

FIG. 9

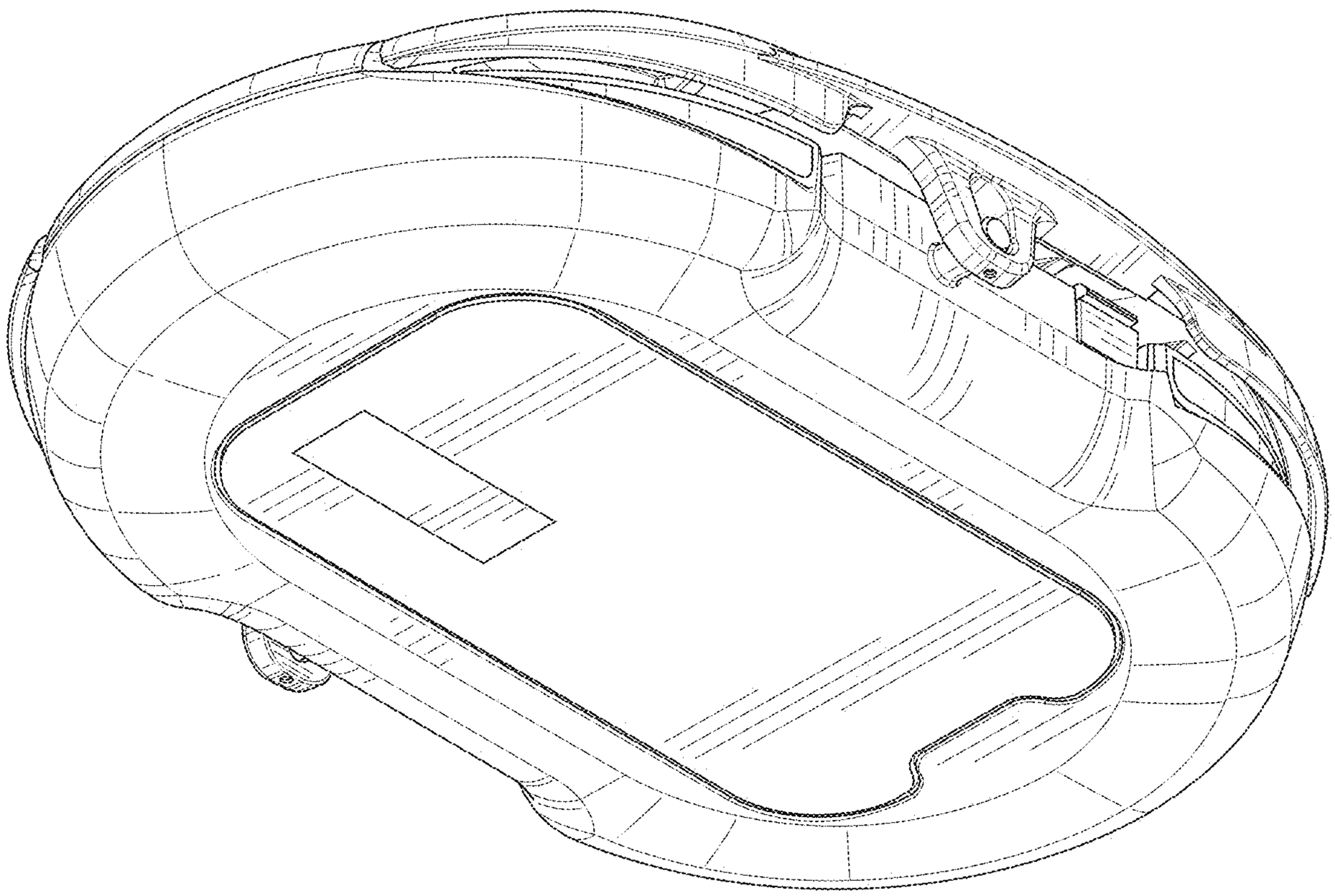

FIG. 10

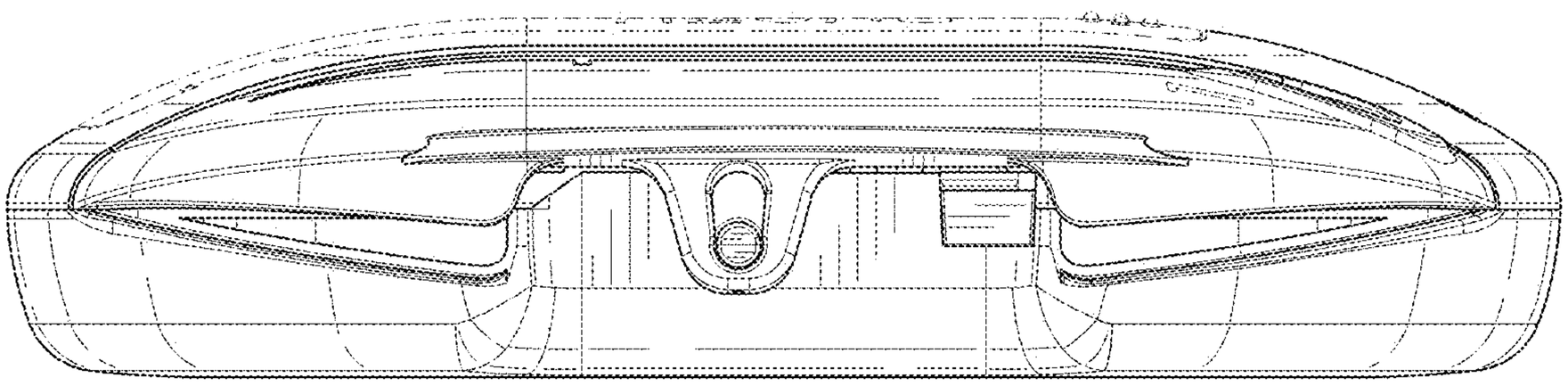

FIG. 11

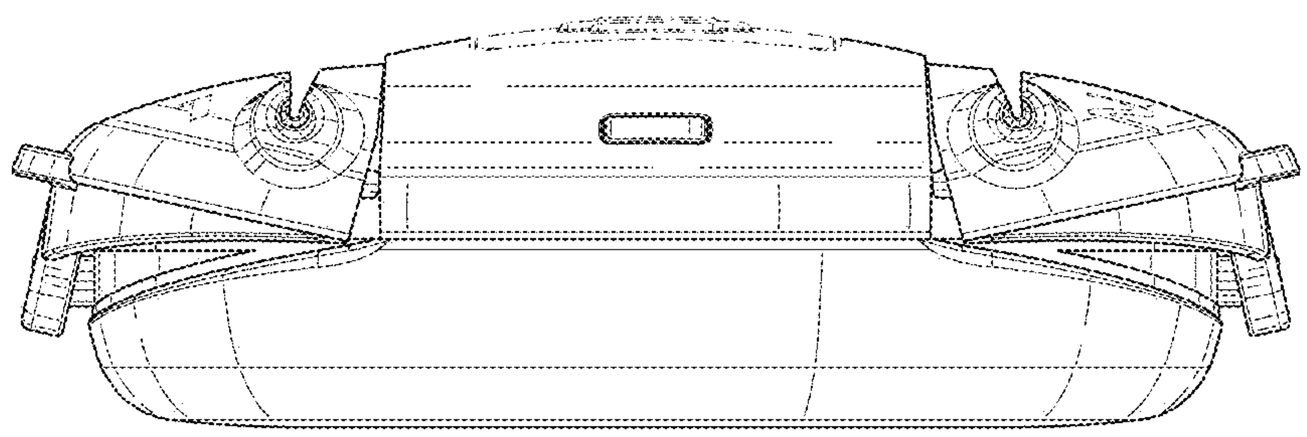

FIG. 12

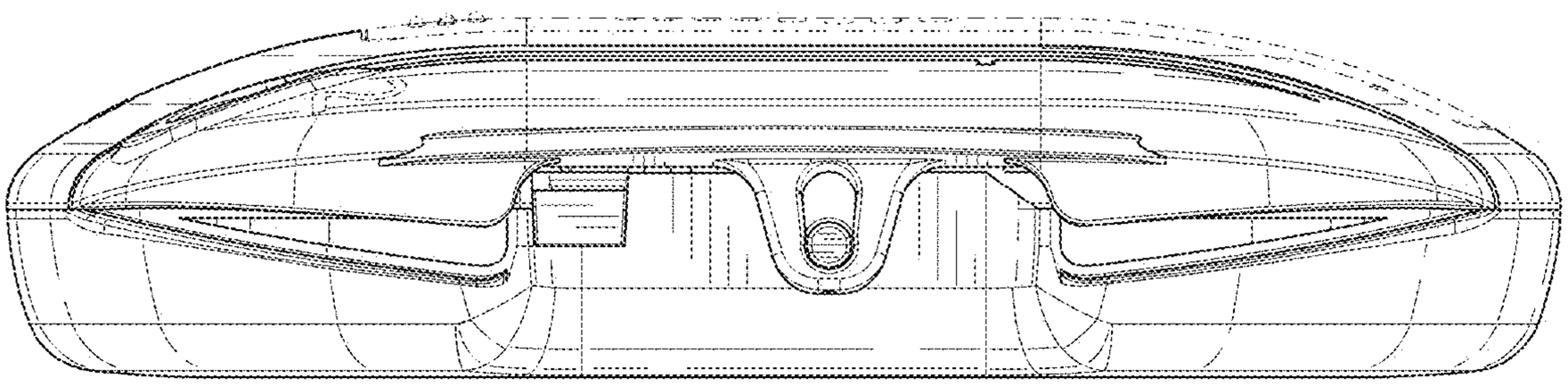

FIG. 13

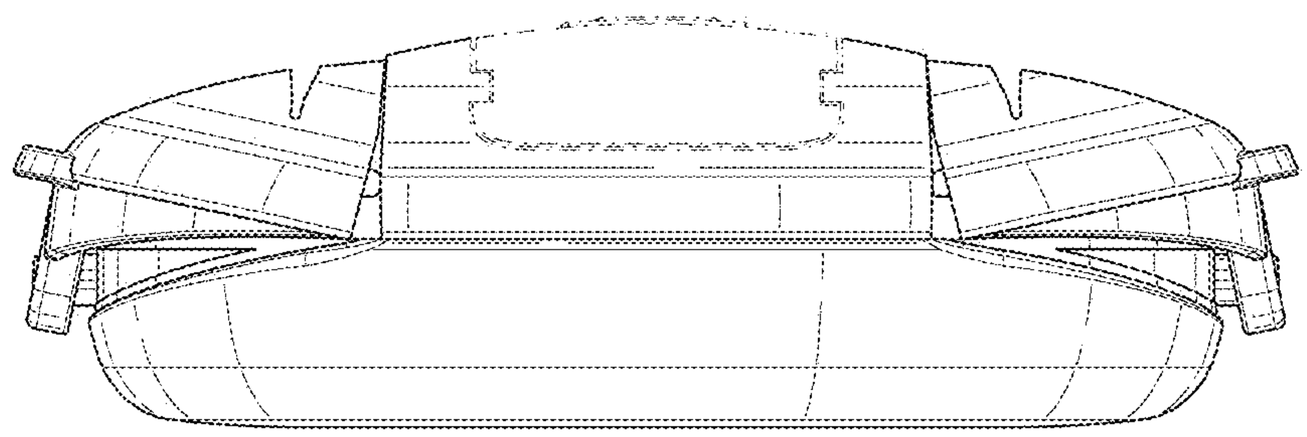

FIG. 14

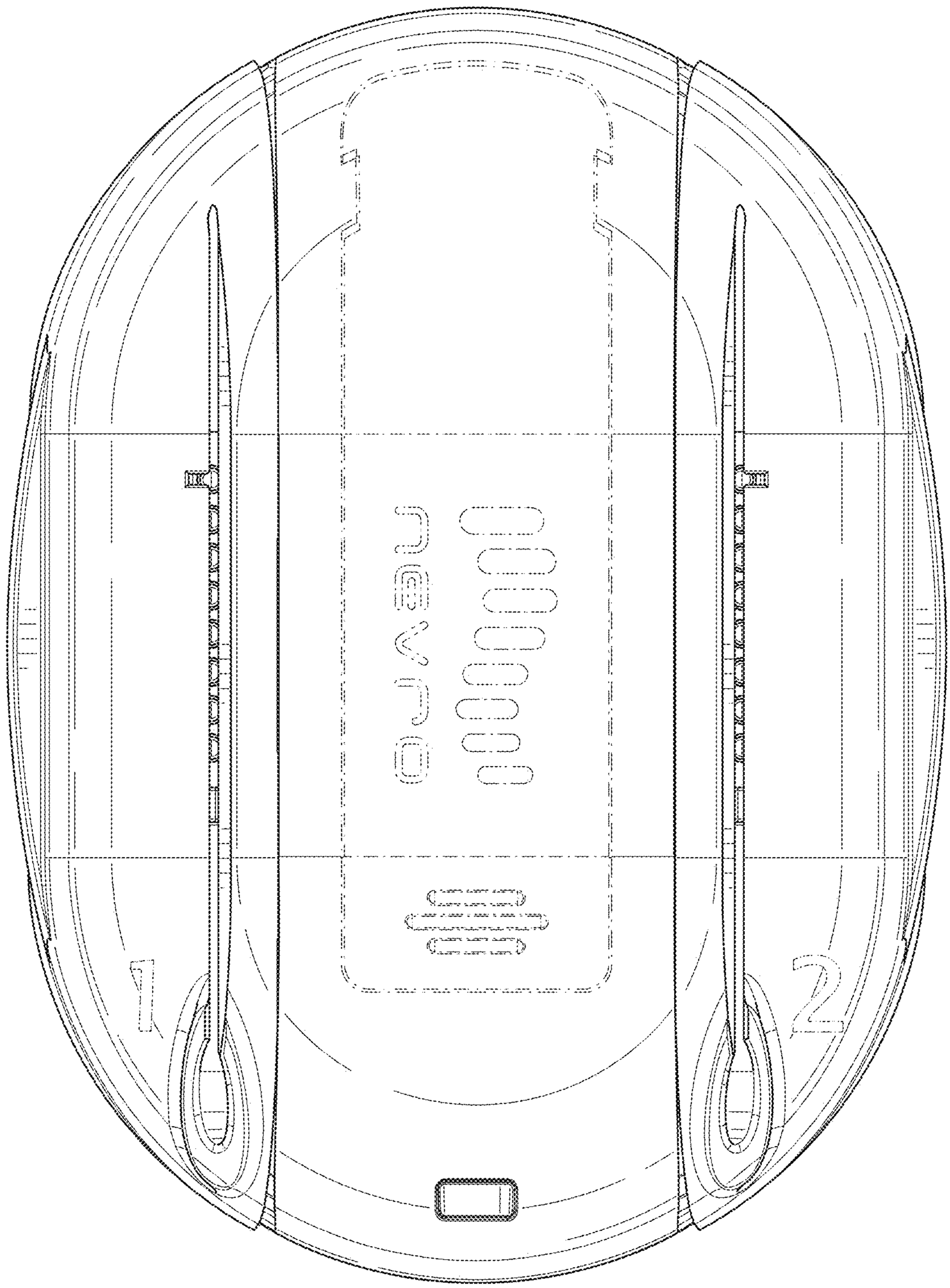

FIG. 15

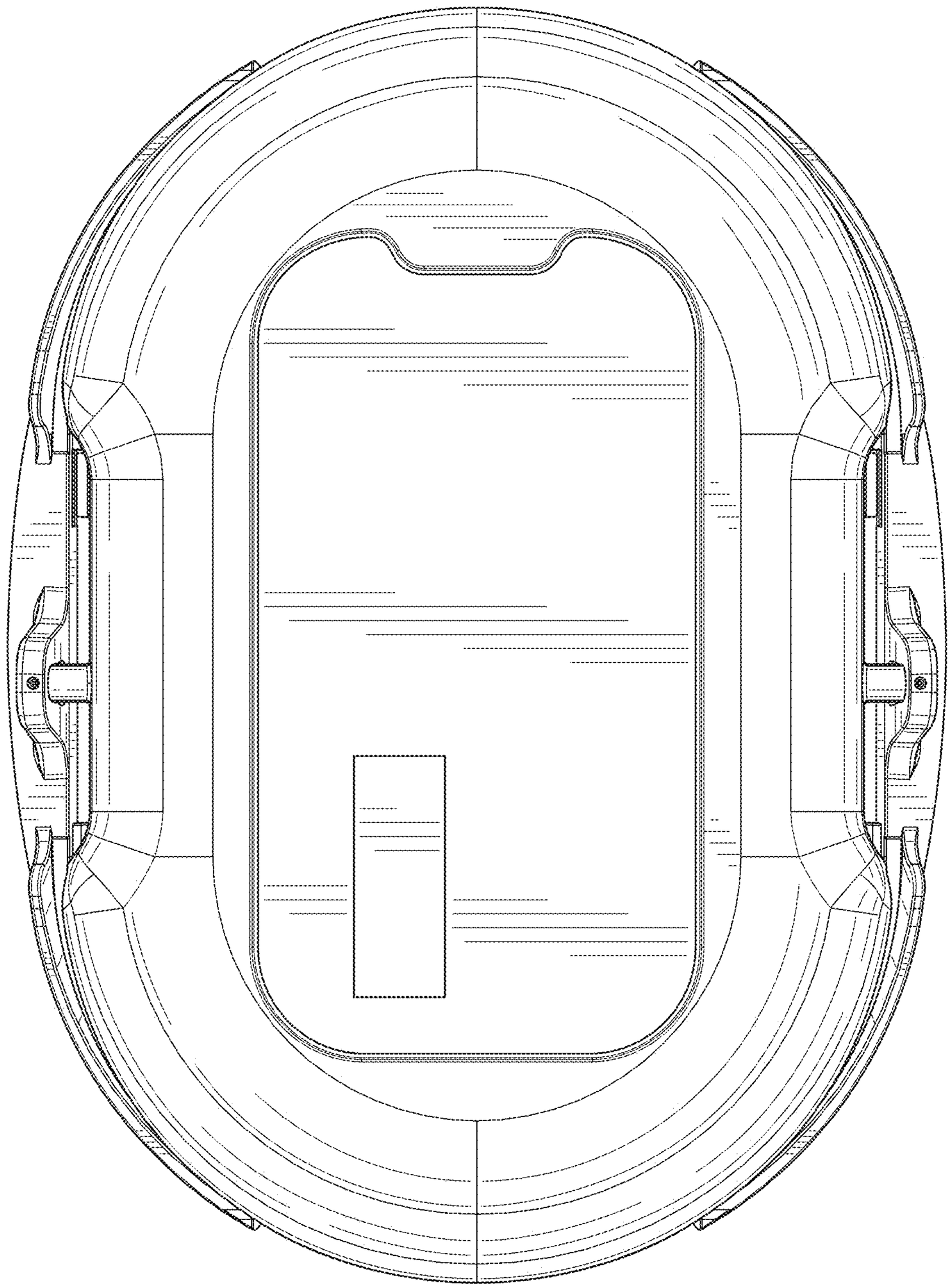

FIG. 16