US00D984555S

(12) United States Design Patent
Ma

(10) Patent No.: US D984,555 S
(45) Date of Patent: ** Apr. 25, 2023

(54) **TOY GUN**

(71) Applicant: **Linyi Ruifeng New Material Technology Co., Ltd.**, Shandong (CN)

(72) Inventor: **Bujian Ma**, Shandong (CN)

(73) Assignee: **Linyi Ruifeng New Material Technology Co., Ltd.**, Shandong (CN)

(**) Term: **15 Years**

(21) Appl. No.: **29/814,452**

(22) Filed: **Nov. 5, 2021**

(51) **LOC (14) Cl.** **21-01**

(52) **U.S. Cl.**
USPC **D21/573**

(58) **Field of Classification Search**
USPC D21/483, 567, 573, 574, 575, 636; 446/401, 473; 124/27; 42/54; 273/349; D22/103, 104, 108, 115
CPC .. F41B 11/89; F41B 11/62; F41B 7/08; A63H 5/04; F41C 3/005; F41C 7/00
See application file for complete search history.

(56) **References Cited**

U.S. PATENT DOCUMENTS

D803,955	S	*	11/2017	Martelli	D21/573
10,322,355	B1	*	6/2019	Liu	A63H 5/04
D864,336	S	*	10/2019	Šimek	D21/573
D903,032	S	*	11/2020	Swoboda	D21/573
D962,356	S	*	8/2022	Gong	D21/573
D966,432	S	*	10/2022	Chen	D21/573
D973,790	S	*	12/2022	Deng	D21/573
D978,262	S	*	2/2023	Wu	D21/573
2018/0202752	A1	*	7/2018	Buys	F41B 11/55

OTHER PUBLICATIONS

Electric Gel Ball Blaster Toy,Eco-Friendly Splatter Ball Blaster Automatic, with 60000+ Water Beads and Goggles, for Outdoor Activities, as shown in www.amazon.com, Apr. 17, 2022. ASIN B09TXGP4JQ. (Year: 2022).*

Gel Ball Blaster Automatic—M416 Splatter Ball Blaster with 40K Water Beads & HD Goggles—Electric Gel Ball Blaster, Splat-Blaster, Orby Blaster, Orbi Blaster, Splatter-Toy Blaster Gift (Marble), as shown in www.amazon.com, Aug. 1, 2022. ASIN B0BBTZ3FDM. (Year: 2022).*

* cited by examiner

Primary Examiner — Gino Colan
Assistant Examiner — Gregory G McLemore
(74) *Attorney, Agent, or Firm* — ScienBiziP, P.C.

(57) **CLAIM**

The ornamental design for a toy gun, as shown and described.

DESCRIPTION

FIG. **1** is a front, left, and top perspective view of a toy gun, showing my design.
FIG. **2** is a rear, right, and bottom elevation view thereof
FIG. **3** is a front elevation view thereof.
FIG. **4** is a rear elevation view thereof.
FIG. **5** is a left side elevation view thereof.
FIG. **6** is a right side elevation view thereof.
FIG. **7** is a top plan view thereof.
FIG. **8** is a bottom plan view thereof.
FIG. **9** is a partial enlarged view of an area labeled **9** in FIG. **1** comprising a barrel.
FIG. **10** is a partial enlarged view of an area labeled **10** in FIG. **1** comprising a butt.
FIG. **11** is a partial enlarged view of an area labeled **11** in FIG. **2** comprising a butt; and,
FIG. **12** is a partial enlarged view of an area labeled **12** in FIG. **2** comprising a bullet chamber.
The broken lines shown in the drawings are included for the purpose of illustrating portions of the toy gun that form no part of the claimed design.

1 Claim, 12 Drawing Sheets

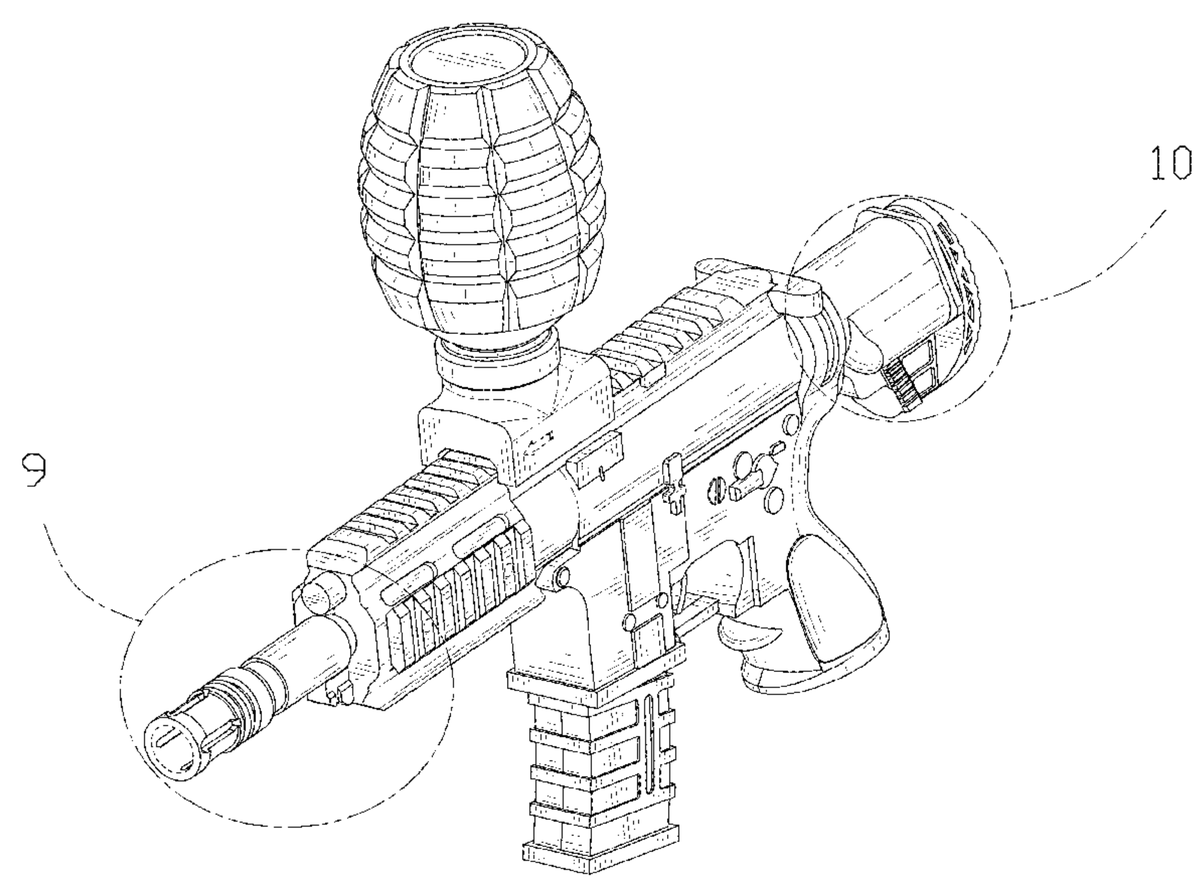

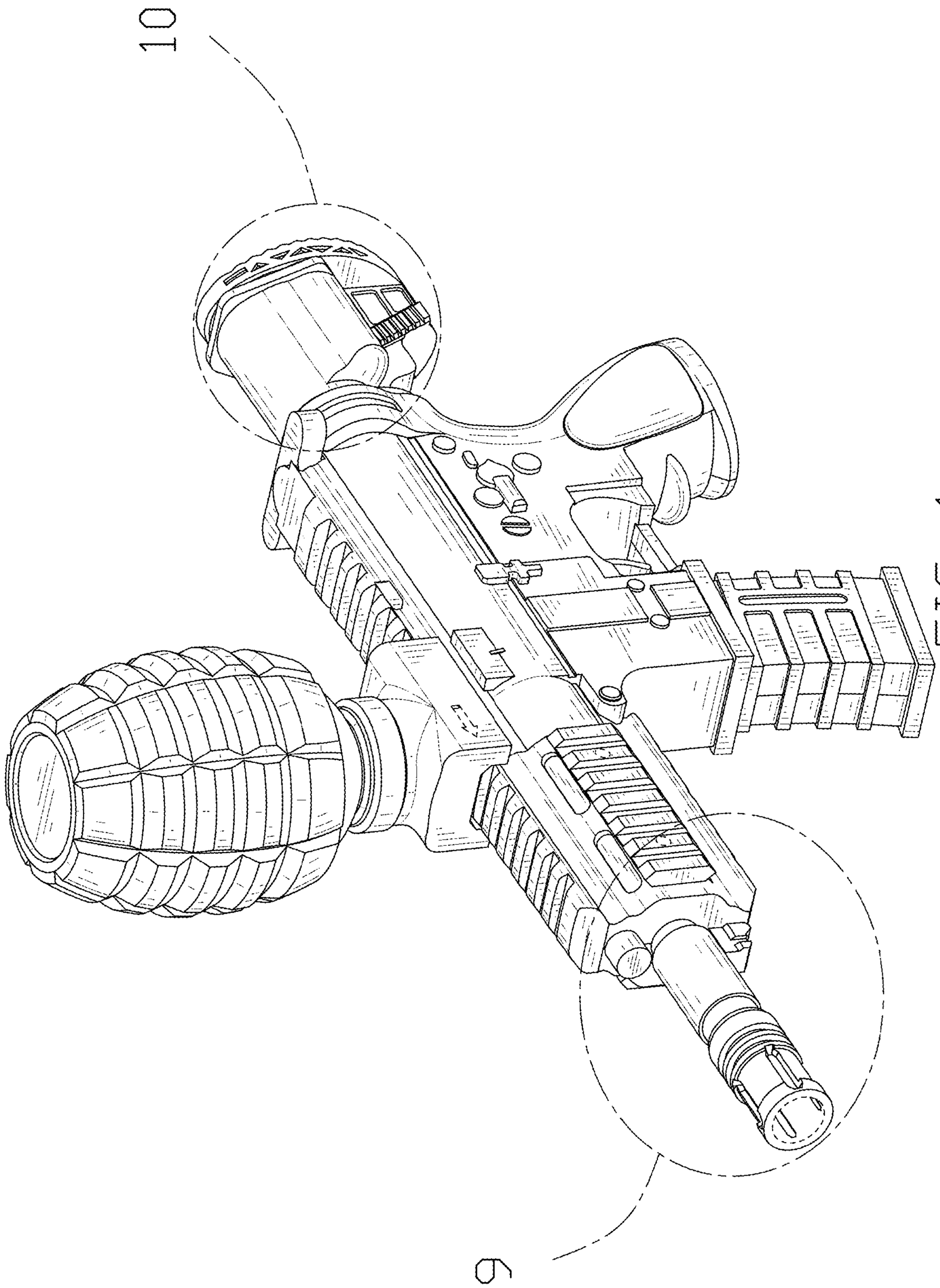

FIG. 1

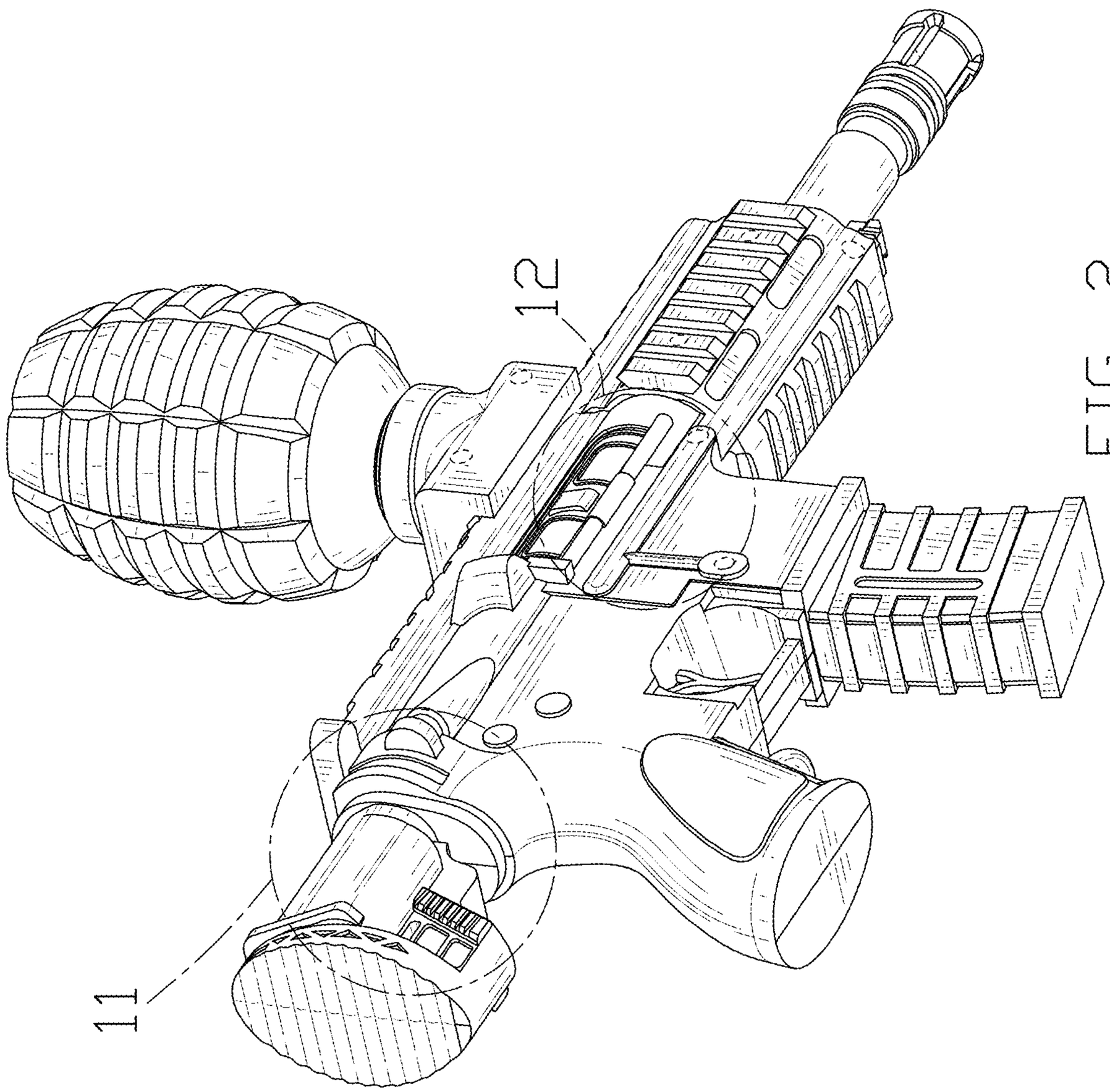

FIG. 2

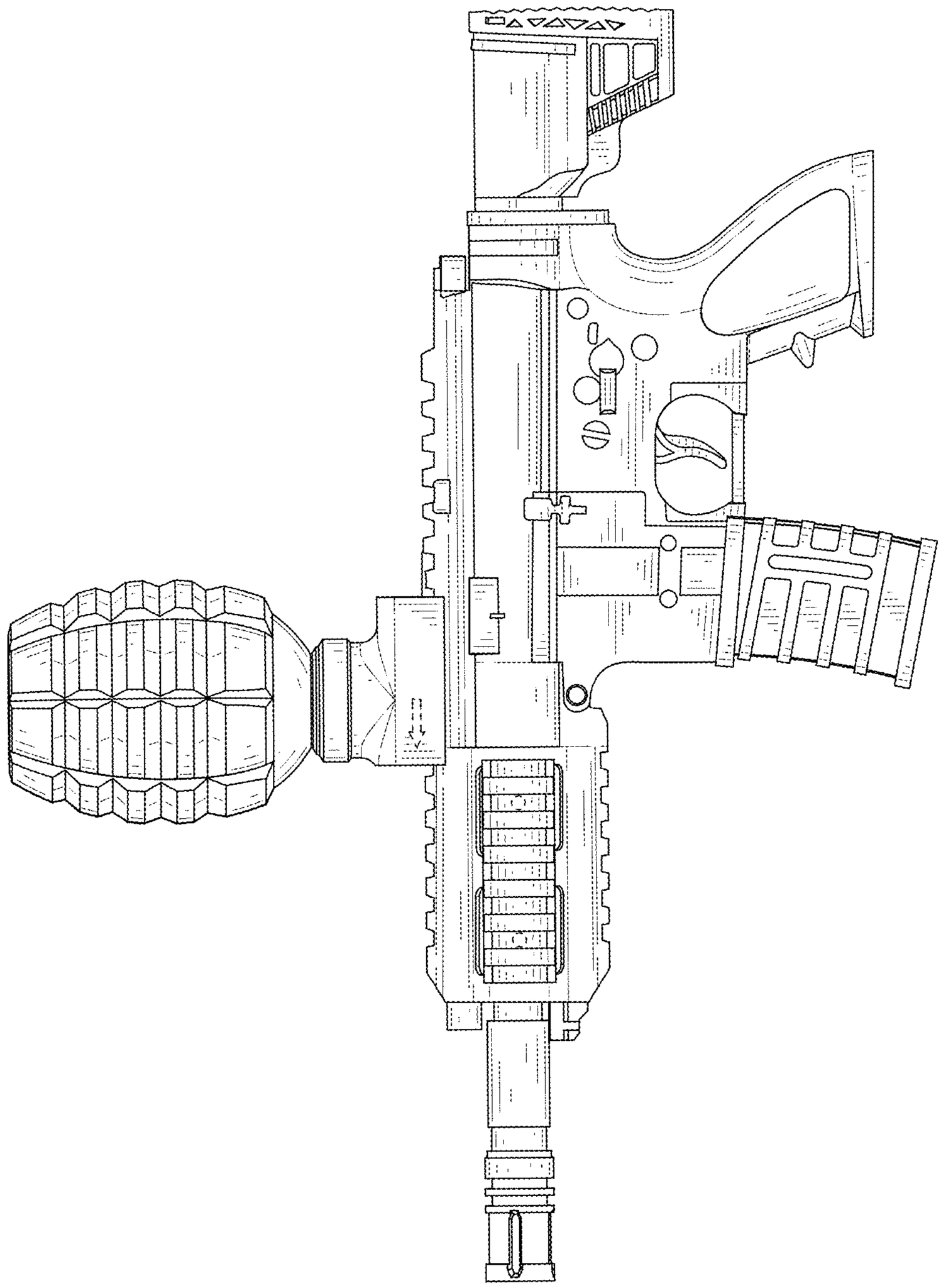

FIG. 3

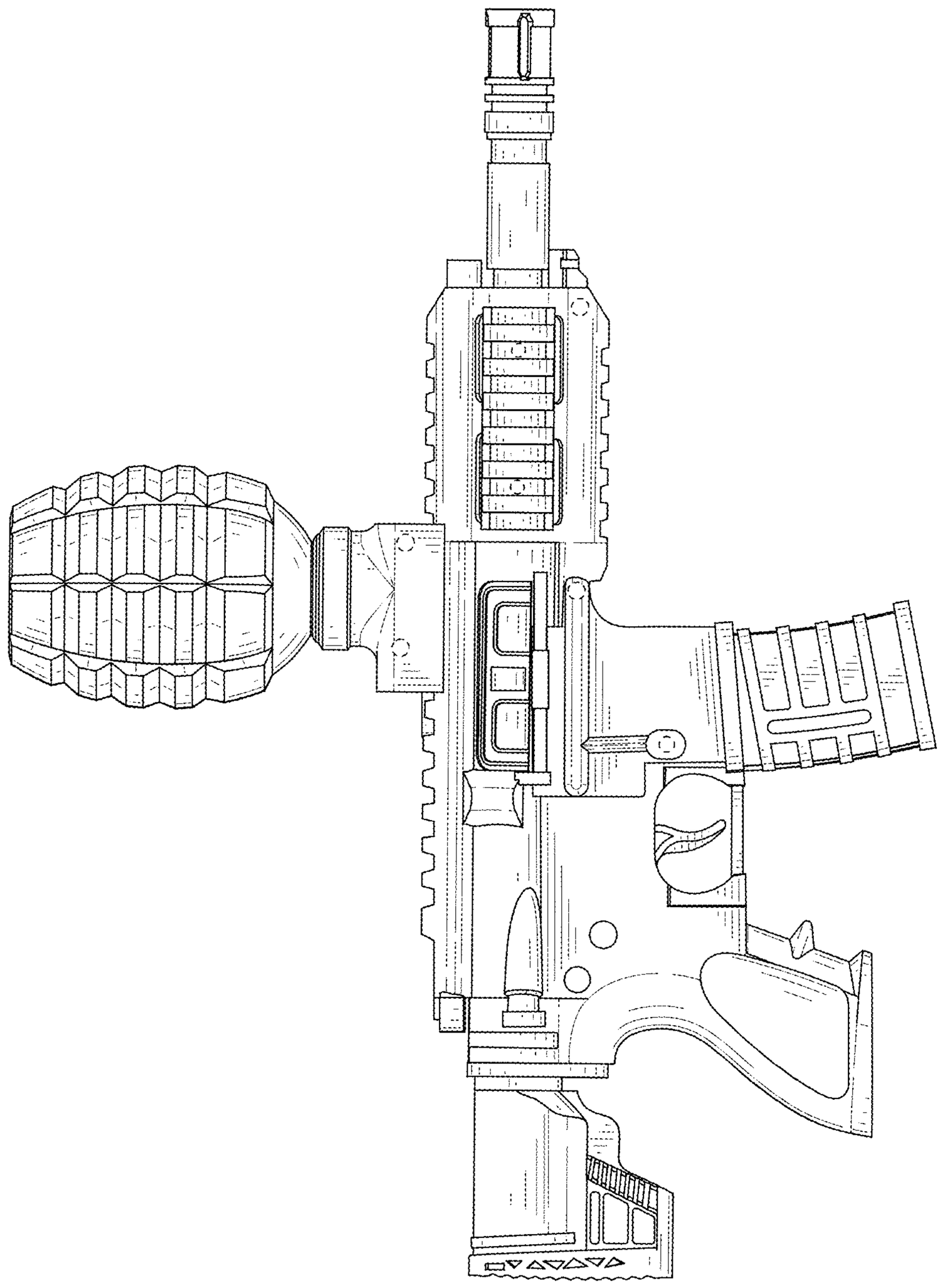

FIG. 4

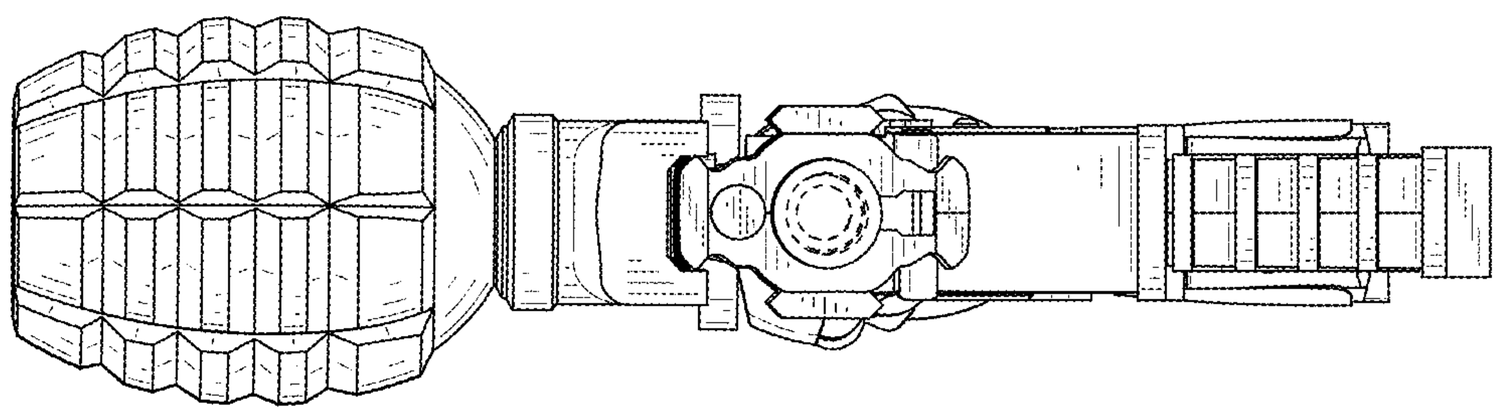

FIG. 5

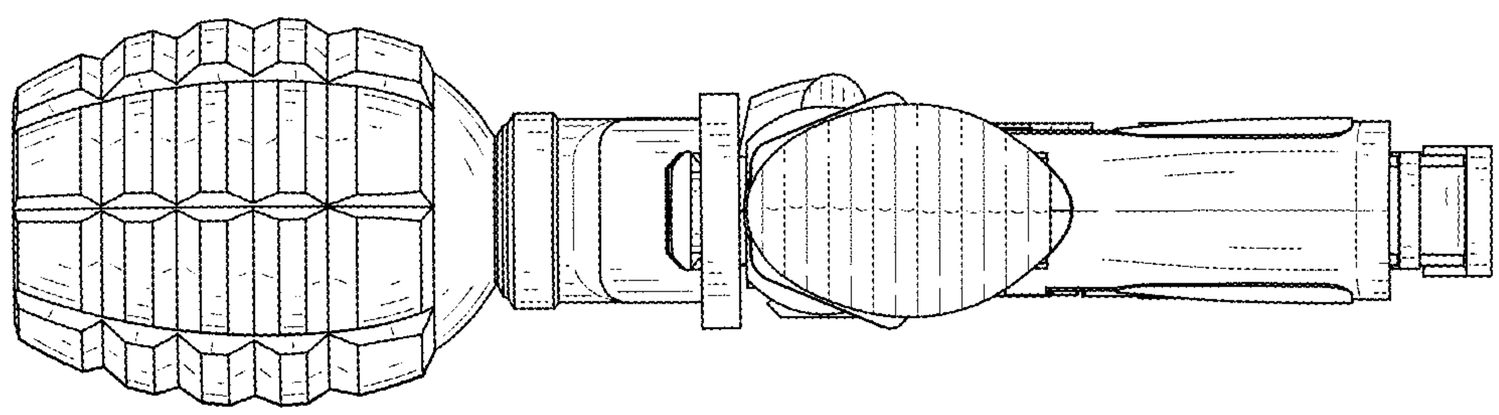

FIG. 6

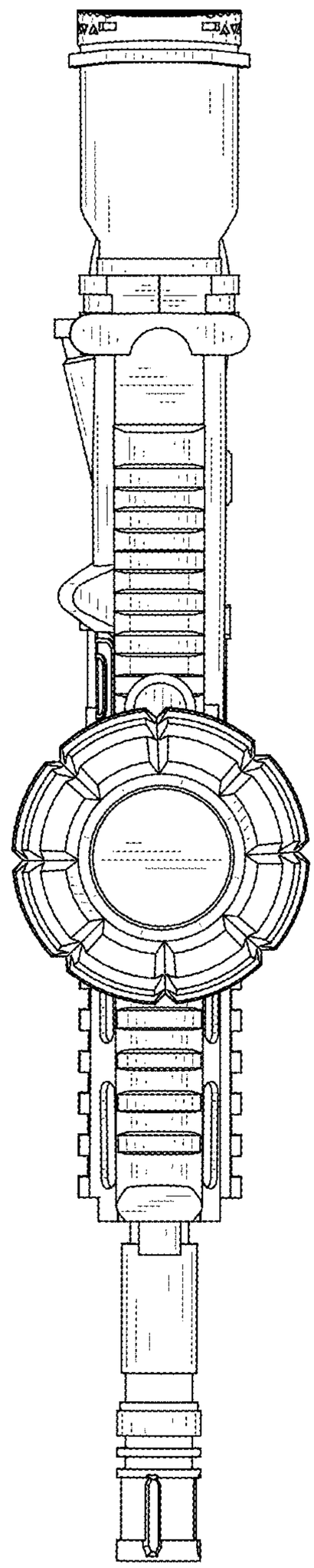

FIG. 7

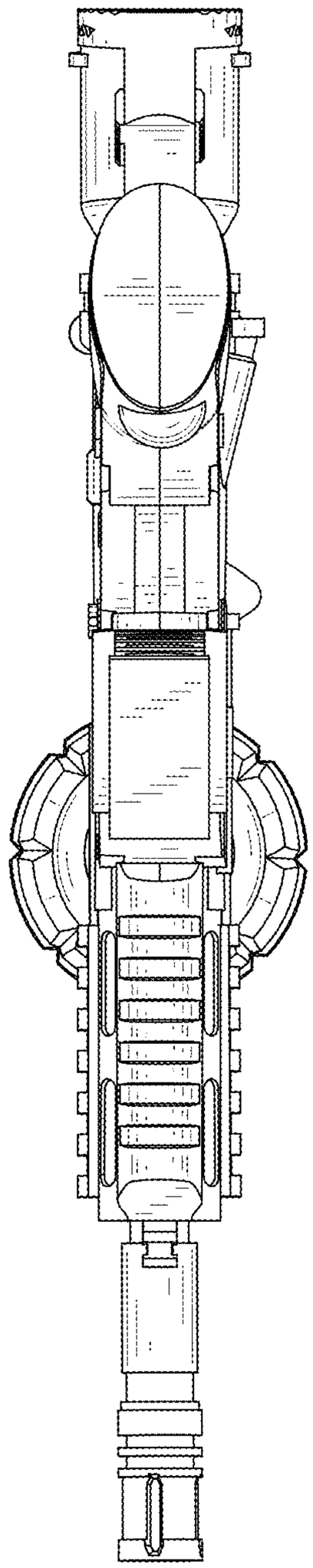

FIG. 8

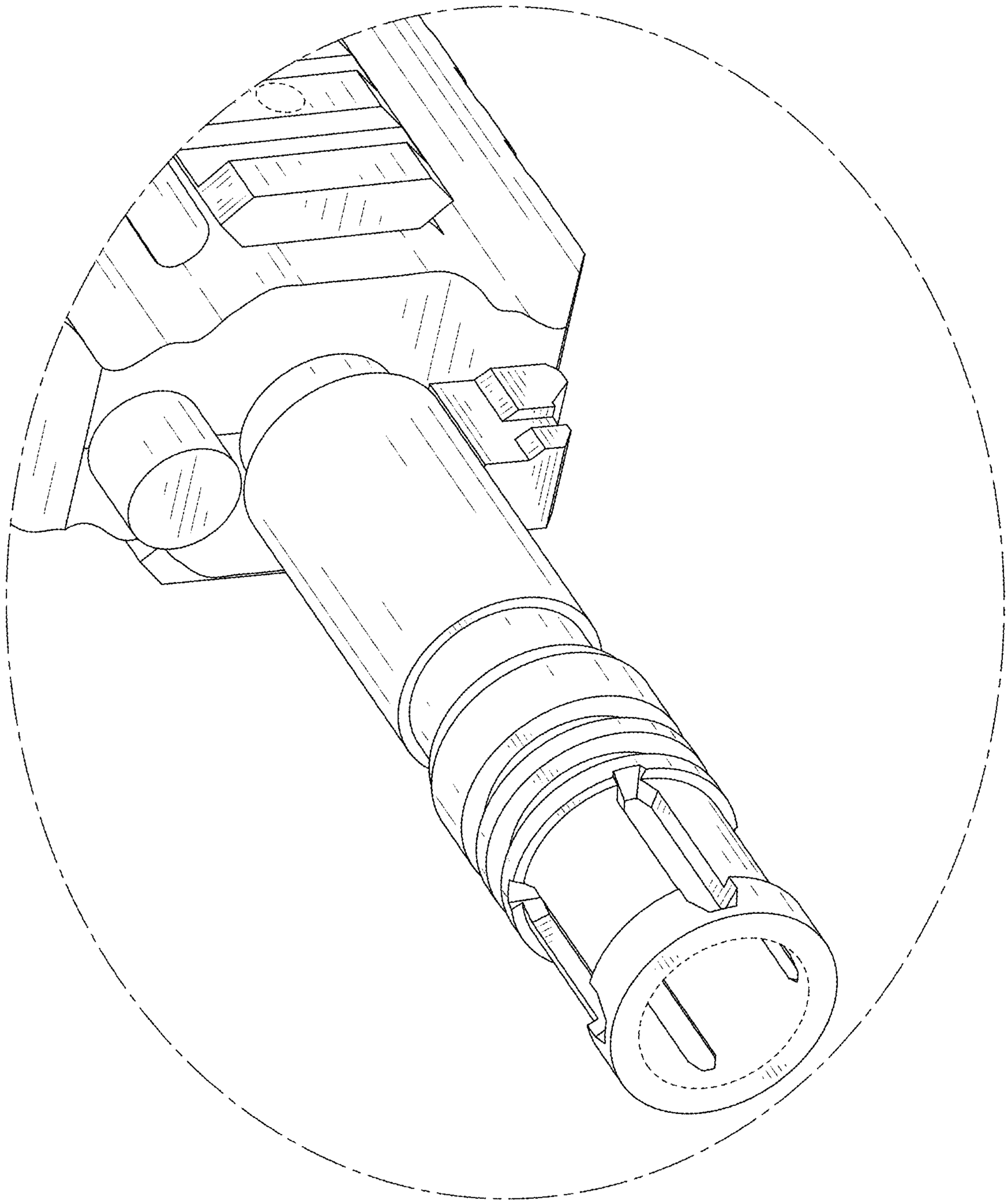

FIG. 9

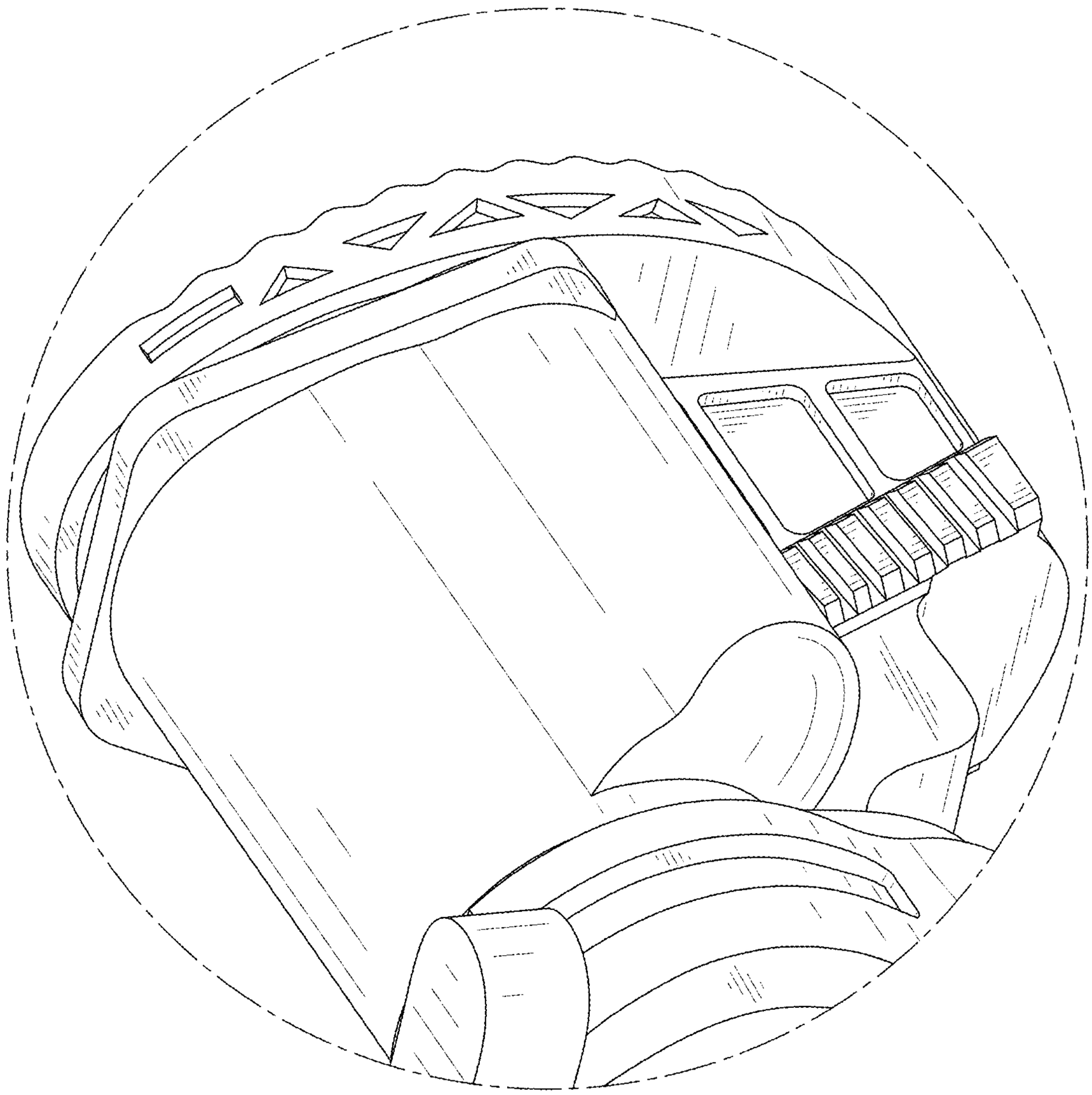

FIG. 10

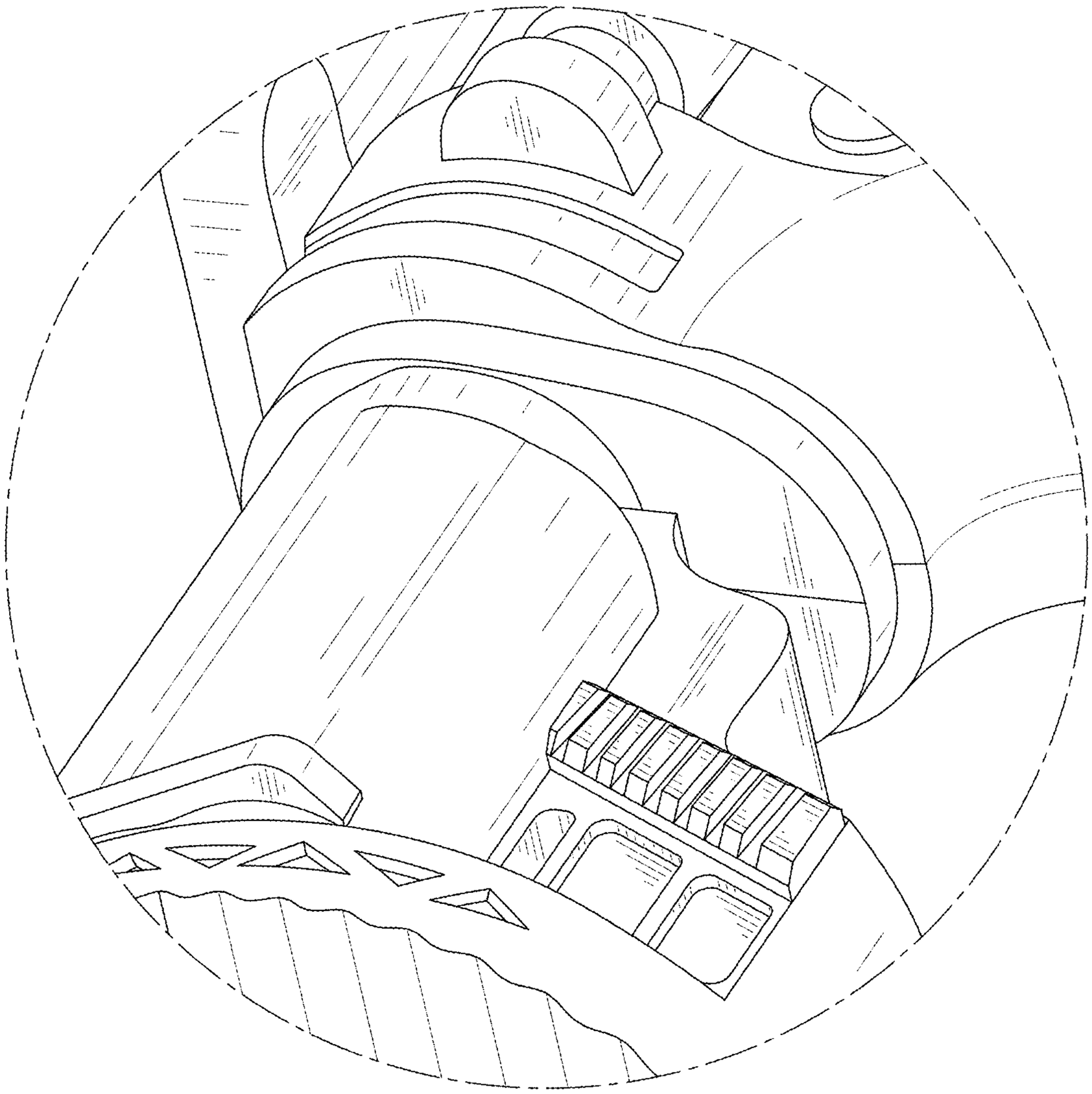

FIG. 11

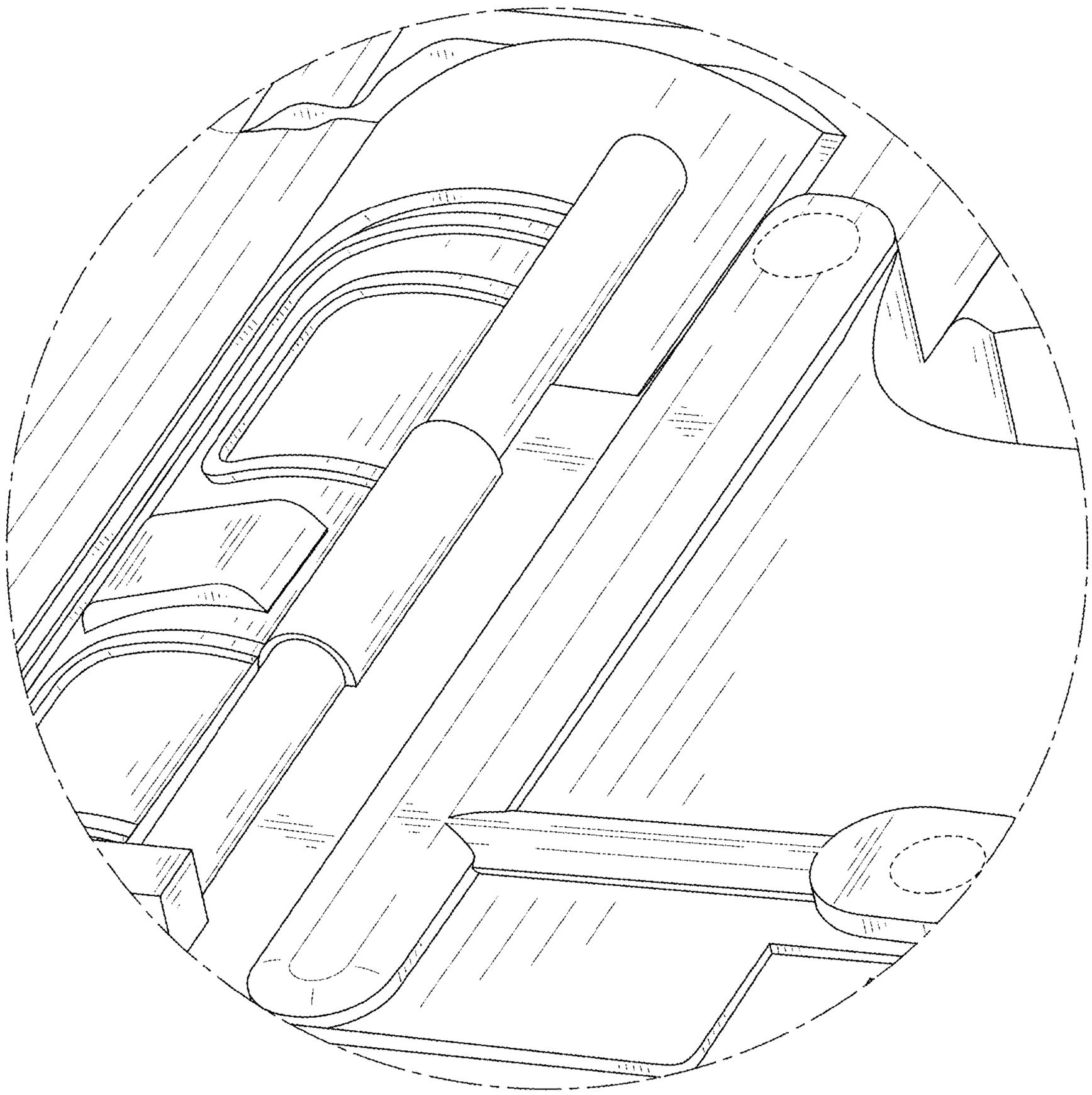

FIG. 12