US00D983323S

(12) United States Design Patent

Prahl et al.

(10) Patent No.: US D983,323 S
(45) Date of Patent: ** Apr. 11, 2023

(54) **MONITOR COVER**

(71) Applicant: **ELKHART BRASS MANUFACTURING COMPANY, LLC**, Elkhart, IN (US)

(72) Inventors: **Kevin Prahl**, Elkhart, IN (US); **Keith Chard**, Elkhart, IN (US); **Jenna Roush**, Pittsburgh, PA (US); **Hyukjae Chang**, Pittsburgh, PA (US); **Dino Mariano**, Pittsburgh, PA (US)

(73) Assignee: **Elkhart Brass Manufacturing Company, Inc.**, Elkhart, IN (US)

(**) Term: **15 Years**

(21) Appl. No.: **29/730,741**

(22) Filed: **Apr. 8, 2020**

Related U.S. Application Data

(63) Continuation-in-part of application No. 16/842,266, filed on Apr. 7, 2020, now Pat. No. 11,369,818.

(51) **LOC (14) Cl.** **23-01**

(52) **U.S. Cl.**
USPC **D23/228**

(58) **Field of Classification Search**
USPC D8/2; D14/344, 300–302, 308, 314, D14/334–336, 339, 371; D15/15, 29, 65; D23/228; D29/125, 129–130; D26/37, D26/39
CPC F21V 3/00; G09F 13/0409; G09F 23/00; G09F 2013/222; A62C 31/28; A62C 35/58; F21Y 2105/16
See application file for complete search history.

(56) **References Cited**

U.S. PATENT DOCUMENTS

5,759,644 A * 6/1998 Stanley G06F 1/1607 206/320
D459,035 S * 6/2002 Baskinger D6/561
D482,472 S * 11/2003 Shiu D26/39
D503,176 S * 3/2005 Wirachowsky D14/449
D556,927 S * 12/2007 Shiu D26/39
D613,497 S * 4/2010 Pho D3/217
D745,729 S * 12/2015 Salmon G08B 21/0469 D26/39
D831,276 S * 10/2018 Pennington, Jr. D29/101.1
D831,334 S * 10/2018 Alexiou D3/217
D864,955 S * 10/2019 Ranade G06F 1/1607 D14/344
D869,034 S * 12/2019 Eichelberger D26/39
D875,734 S * 2/2020 Collins D14/344
(Continued)

Primary Examiner — Jennifer Rivard
Assistant Examiner — Jonathan E Fiencke
(74) *Attorney, Agent, or Firm* — Taft Stettinius & Hollister LLP; Derek B. Lavender

(57) **CLAIM**

The ornamental design for a monitor cover, as shown and described.

DESCRIPTION

FIG. **1** is an elevated back perspective view of a monitor cover of the present invention.
FIG. **2** is an elevated front perspective view of the monitor cover of FIG. **1**.
FIG. **3** is a back view of the monitor cover of FIG. **1**.
FIG. **4** is a front view of the monitor cover of FIG. **1**.
FIG. **5** is a first side view of the monitor cover of FIG. **1**.
FIG. **6** is a second side view of the monitor cover of FIG. **1**.
FIG. **7** is a top view of the monitor cover of FIG. **1**; and,
FIG. **8** is a bottom view of the monitor cover of FIG. **1**.
The broken lines shown on the monitor cover illustrate portions that form no part of the claimed design. The remaining broken lines illustrate environmental structure that form no part of the claimed design.

1 Claim, 8 Drawing Sheets

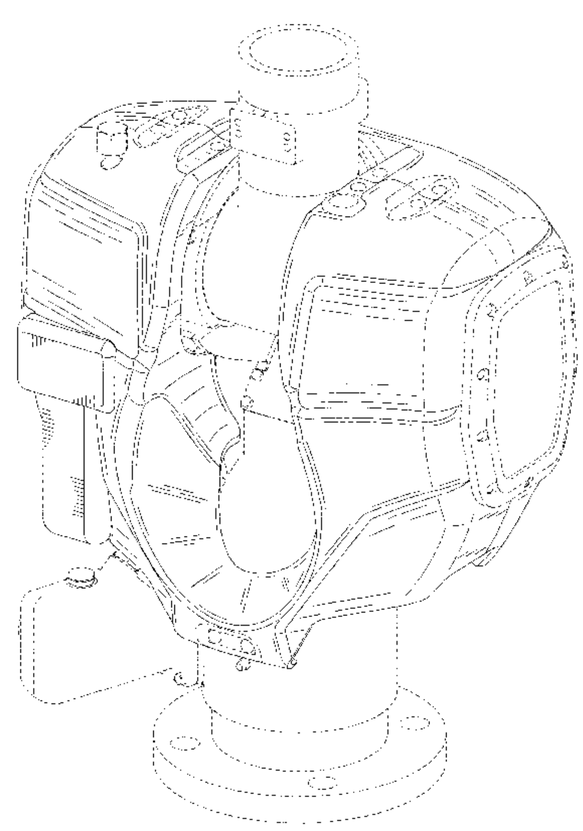

(56) **References Cited**

U.S. PATENT DOCUMENTS

D891,384	S	*	7/2020	Brutler	D14/137
D896,311	S	*	9/2020	Singer	D21/333
D918,199	S	*	5/2021	Browy	D14/344
D919,618	S	*	5/2021	Ranade	D14/344
D937,828	S	*	12/2021	Glynn	G08B 21/0469 D14/344
D960,305	S	*	8/2022	Dougan	G09F 23/00 D23/213
D960,723	S	*	8/2022	Li	D10/49
D962,393	S	*	8/2022	Eads	D23/249
2011/0253397	A1	*	10/2011	Combs	A62C 31/28 169/51
2021/0308510	A1	*	10/2021	Prahl	G09F 23/00

* cited by examiner

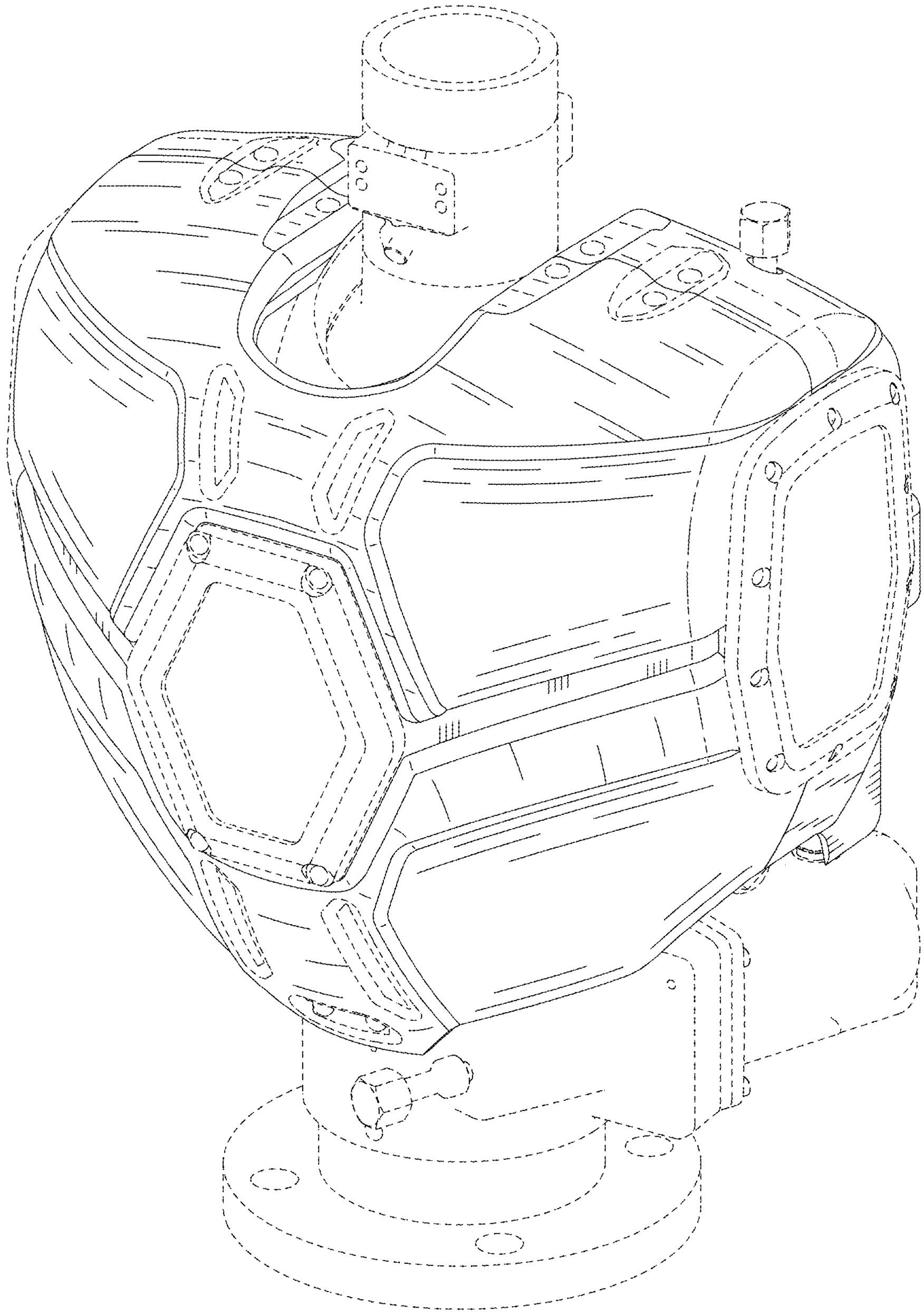

Fig. 1

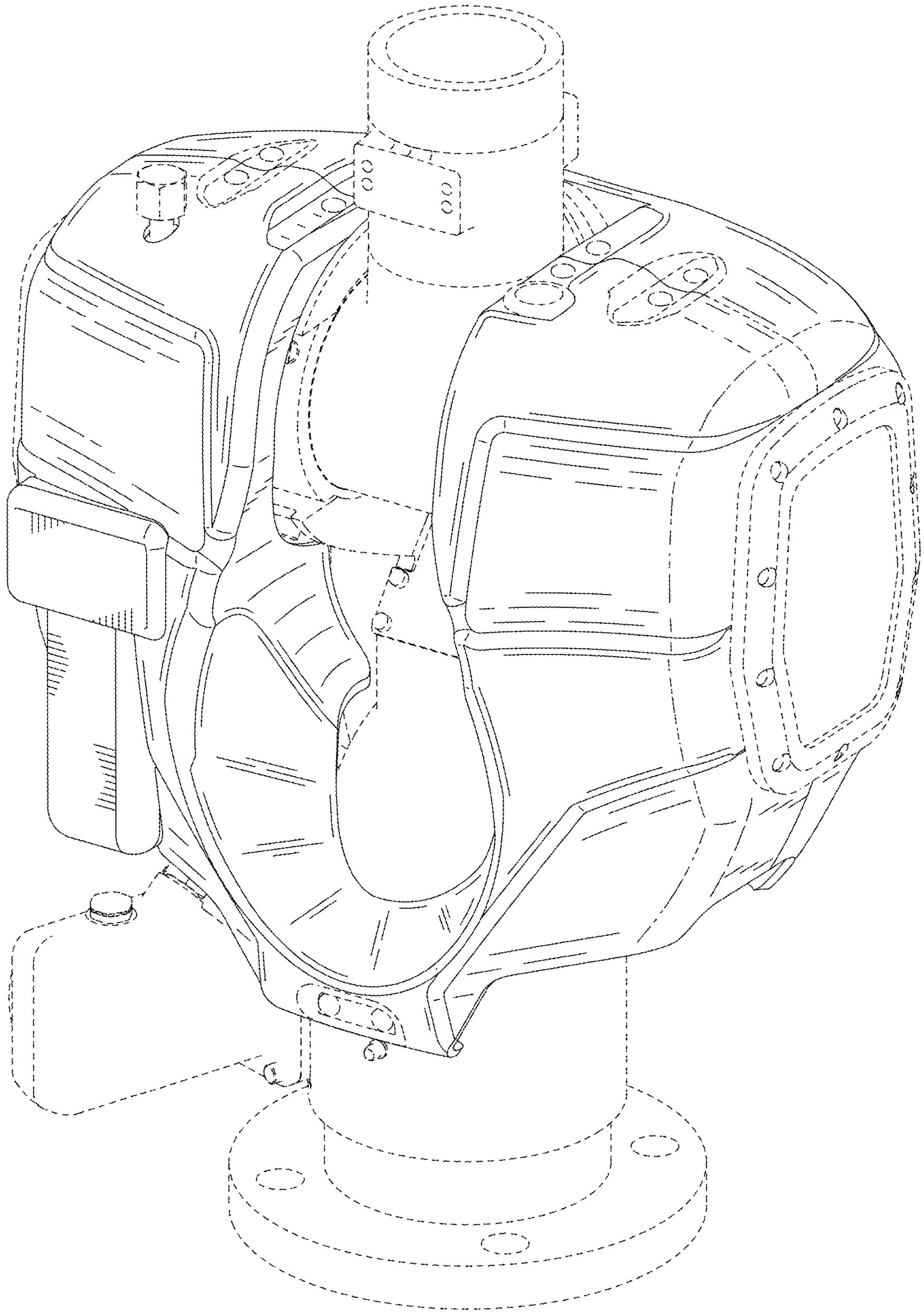

Fig. 2

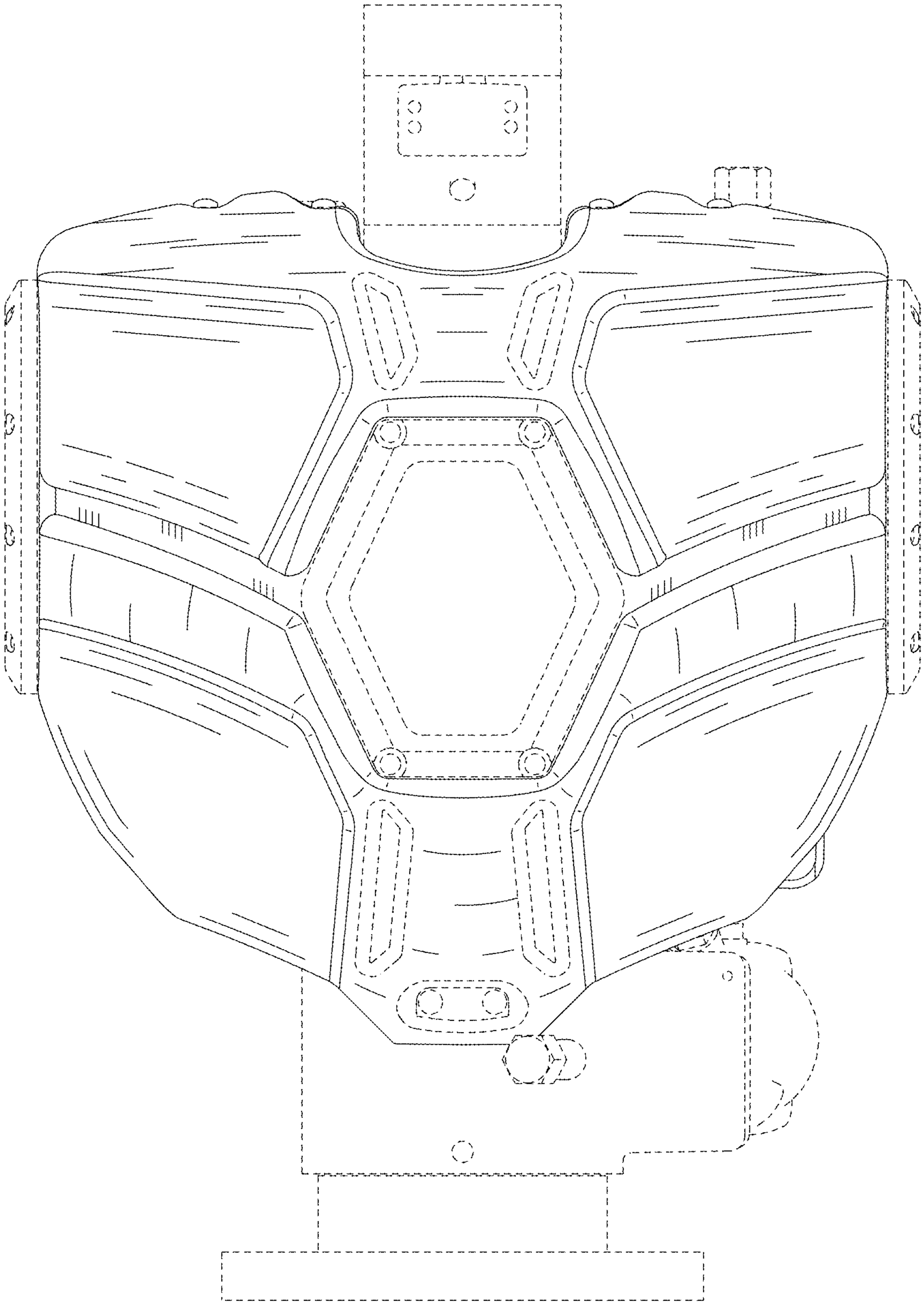

Fig. 3

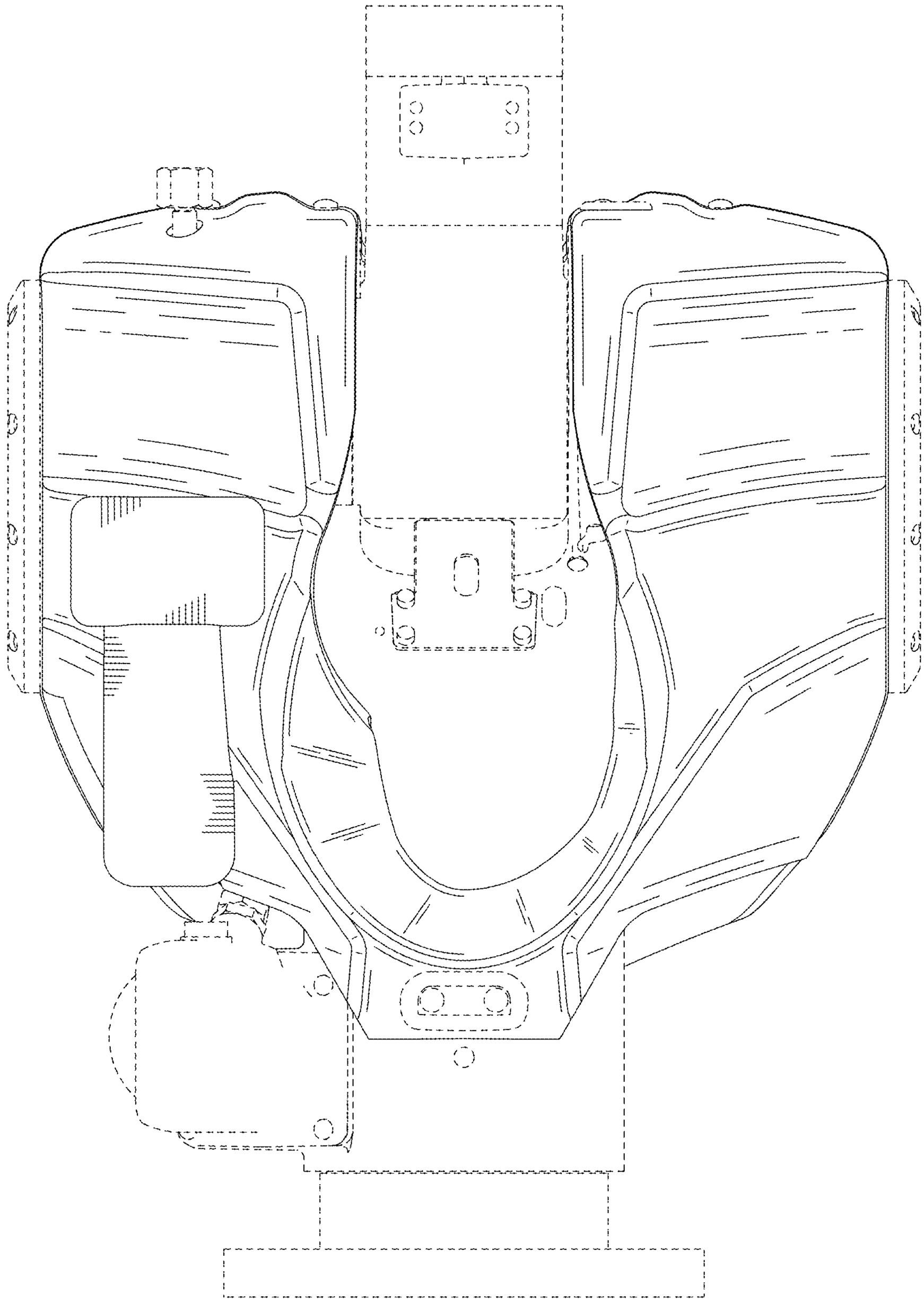

Fig. 4

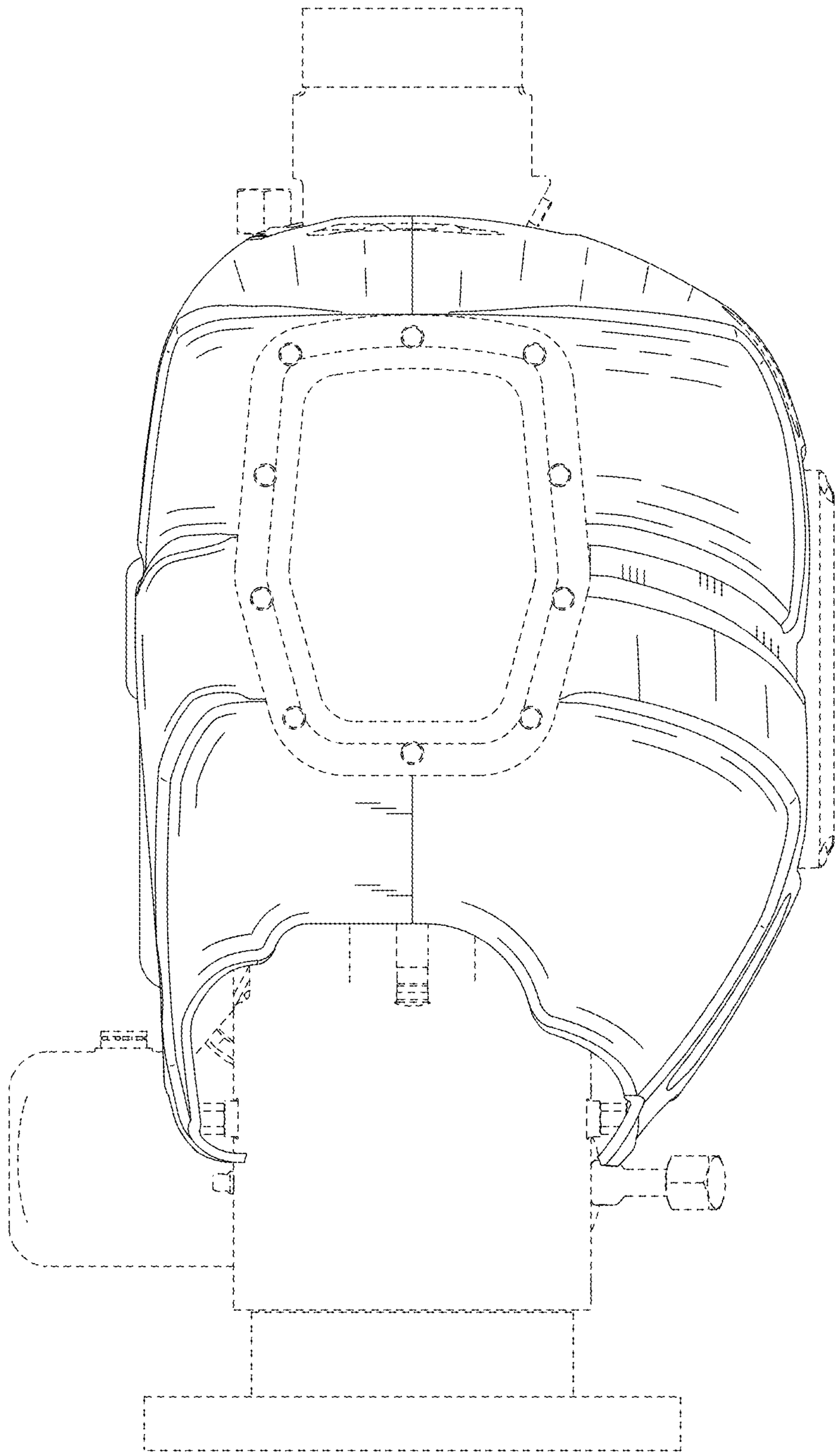

Fig. 5

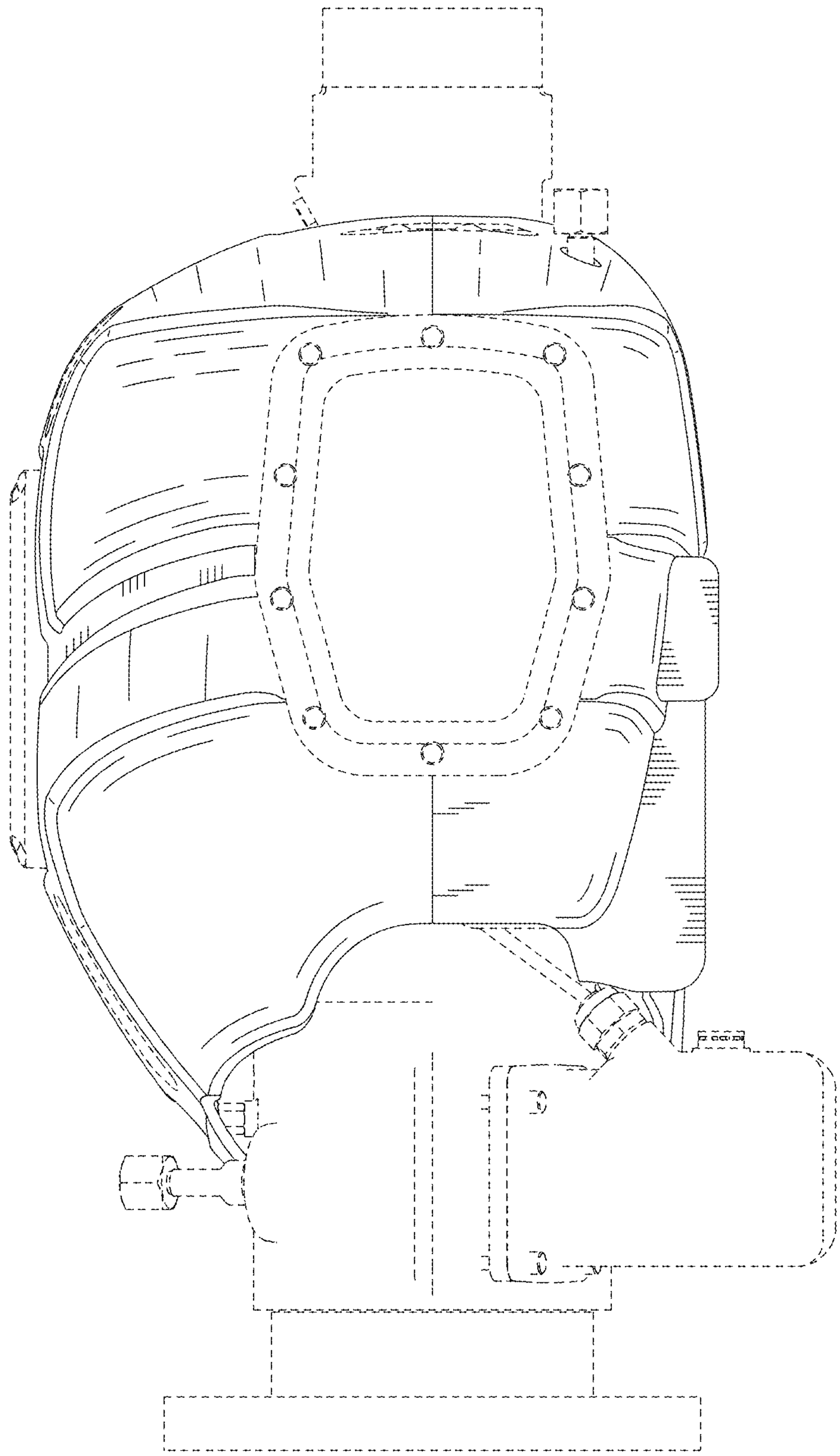

Fig. 6

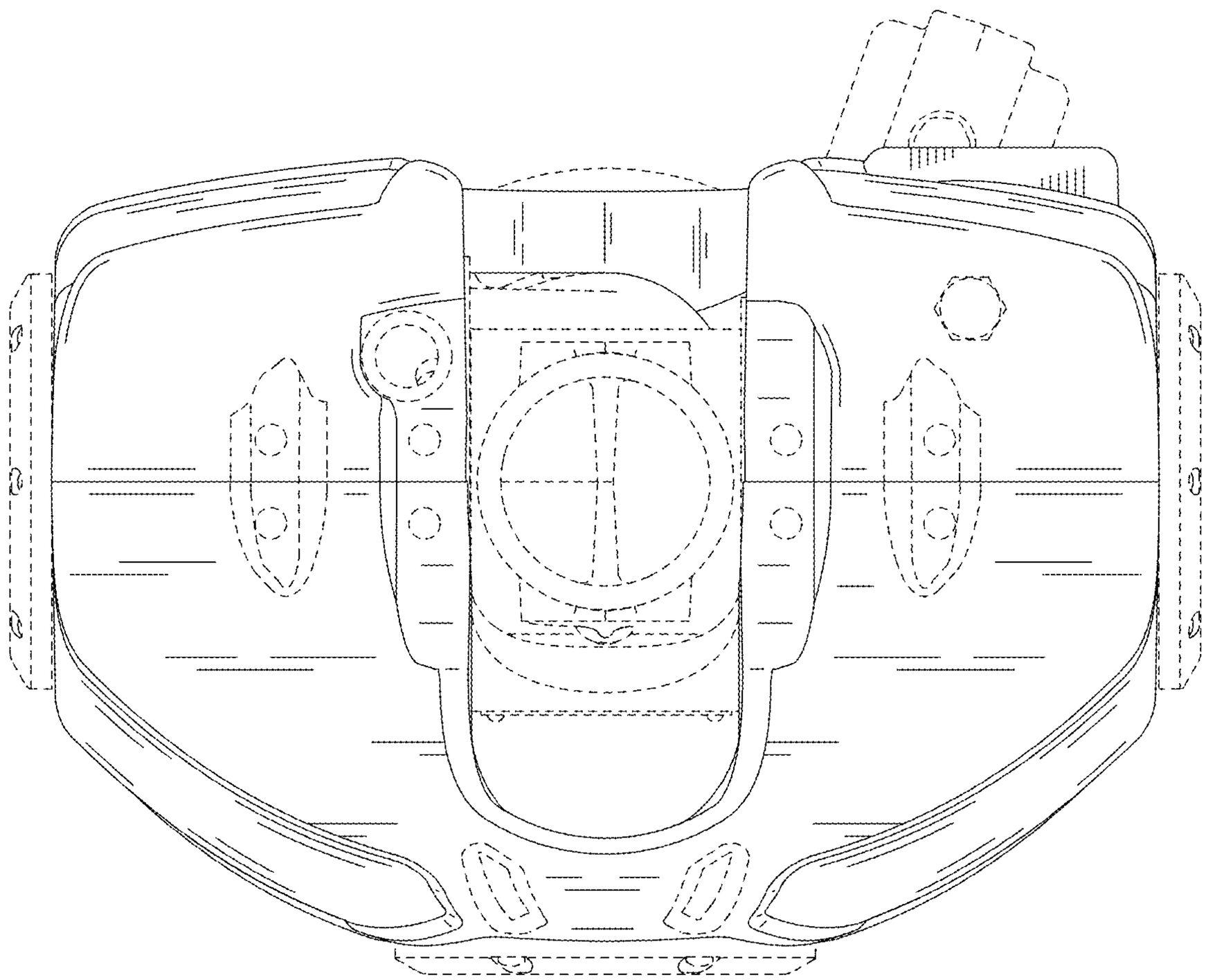

Fig. 7

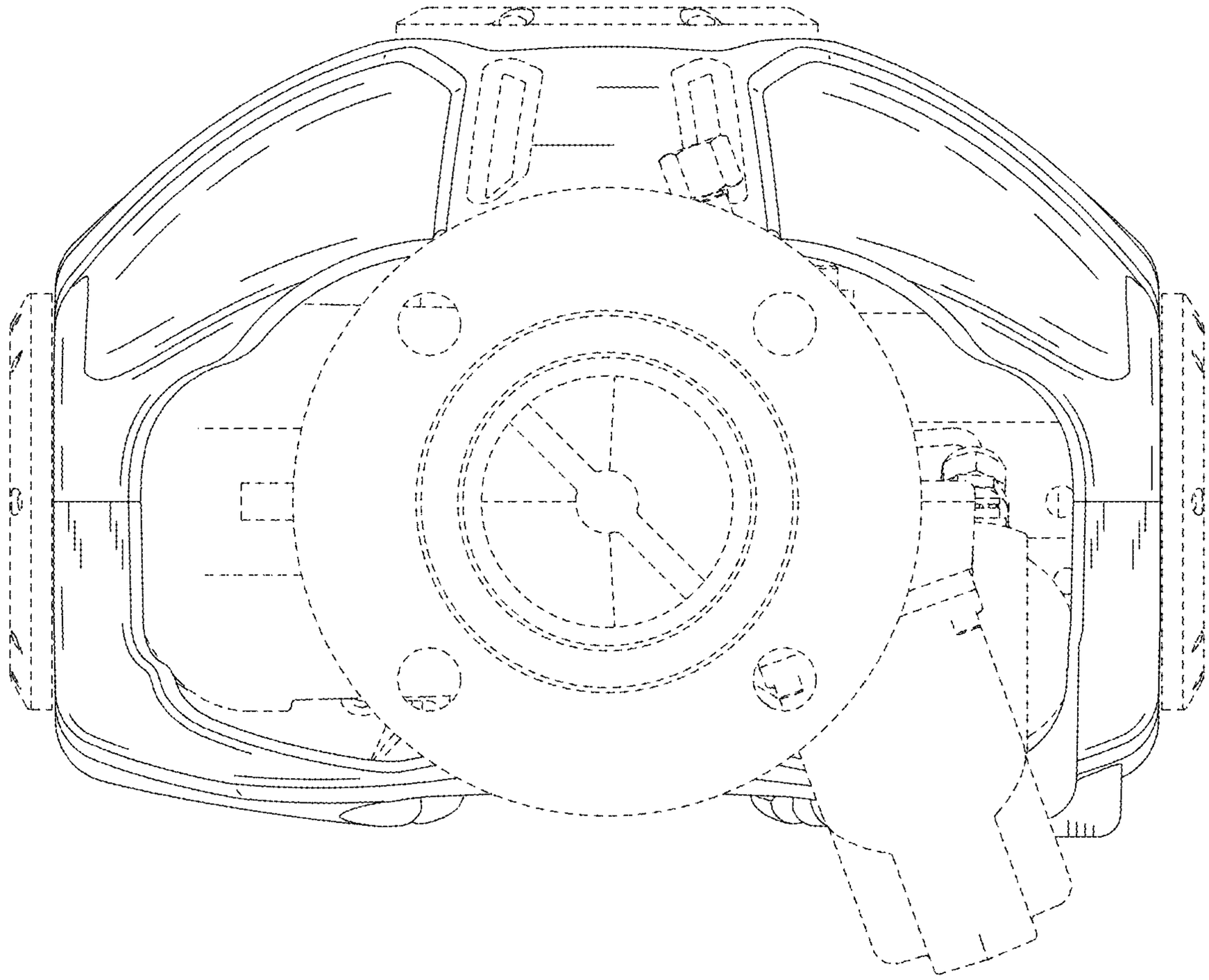

Fig. 8