US00D982628S

(12) United States Design Patent

Shibayama et al.

(10) Patent No.: US D982,628 S
(45) Date of Patent: ** Apr. 4, 2023

(54) **GAS INJECTOR FOR METAL POWDER MANUFACTURING EQUIPMENT**

(71) Applicant: **Mitsubishi Heavy Industries, Ltd.**, Tokyo (JP)

(72) Inventors: **Takashi Shibayama**, Yokohama (JP); **Shigenobu Eguchi**, Yokohama (JP); **Shinya Imano**, Yokohama (JP)

(73) Assignee: **MITSUBISHI HEAVY INDUSTRIES, LTD.**, Tokyo (JP)

(**) Term: **15 Years**

(21) Appl. No.: **29/770,236**

(22) Filed: **Feb. 10, 2021**

(30) **Foreign Application Priority Data**

Aug. 12, 2020 (JP) 2020-016894

(51) **LOC (14) Cl.** **15-09**

(52) **U.S. Cl.**
USPC **D15/138**

(58) **Field of Classification Search**
USPC D15/135, 138; D23/213; D26/35, 86, D26/118
CPC B22F 9/082; B22F 1/00; B22F 2009/088
See application file for complete search history.

(56) **References Cited**

U.S. PATENT DOCUMENTS

D737,489	S *	8/2015	Russell	D26/50
2020/0246874	A1*	8/2020	Shibayama	B22F 9/082
2022/0080503	A1*	3/2022	Shibayama	B22F 3/003

FOREIGN PATENT DOCUMENTS

EP	3689512	A1 *	8/2020	B22F 9/082
TW	D218907	S *	5/2022	B22F 9/082
TW	D218908	S *	5/2022	
WO	2019/112052	A1	6/2019	

OTHER PUBLICATIONS

Fenix Flashlight, available in fenixlighting.com, announced Year 2022 [online], [site visited Oct. 26, 2022], Internet URL:https://www.fenixlighting.com/products/fenix-tk35ue-v2-flashlight (Year: 2022).*

"Gas Atomization System Using Our Original Additive Manufacturing Technology" Presented by Mitsubishi Hitachi Power Systems, Ltd. at Additive Manufacturing Expo Nagoya Apr. 16-19, 2019 (2 pgs.).

* cited by examiner

Primary Examiner — Calvin E Vansant
Assistant Examiner — Eidiol Ghigliotty Torres
(74) *Attorney, Agent, or Firm* — Volpe Koenig

(57) **CLAIM**

The ornamental design for a gas injector for metal powder manufacturing equipment, as shown and described.

DESCRIPTION

FIG. **1** is a perspective view of a gas injector for metal powder manufacturing equipment showing our new design;
FIG. **2** is a top plan view thereof;
FIG. **3** is a bottom plan view thereof;
FIG. **4** is a cross-sectional view taken along line **4-4** in FIG. **2**; and,
FIG. **5** is a cross-sectional view taken along line **5-5** in FIG. **2**.
The evenly-spaced broken lines illustrate portions of the gas injector for metal powder manufacturing equipment that form no part of the claimed design.

1 Claim, 5 Drawing Sheets

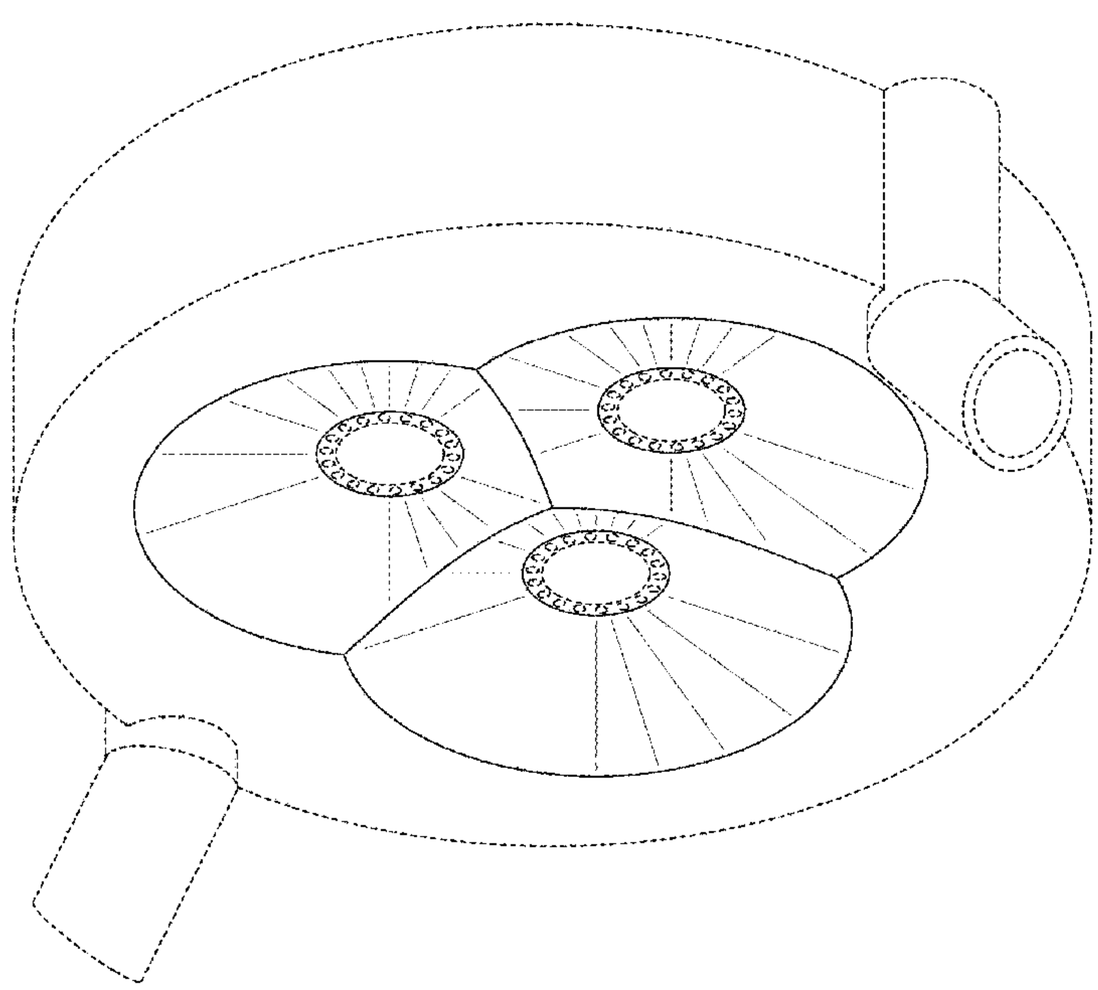

FIG.1

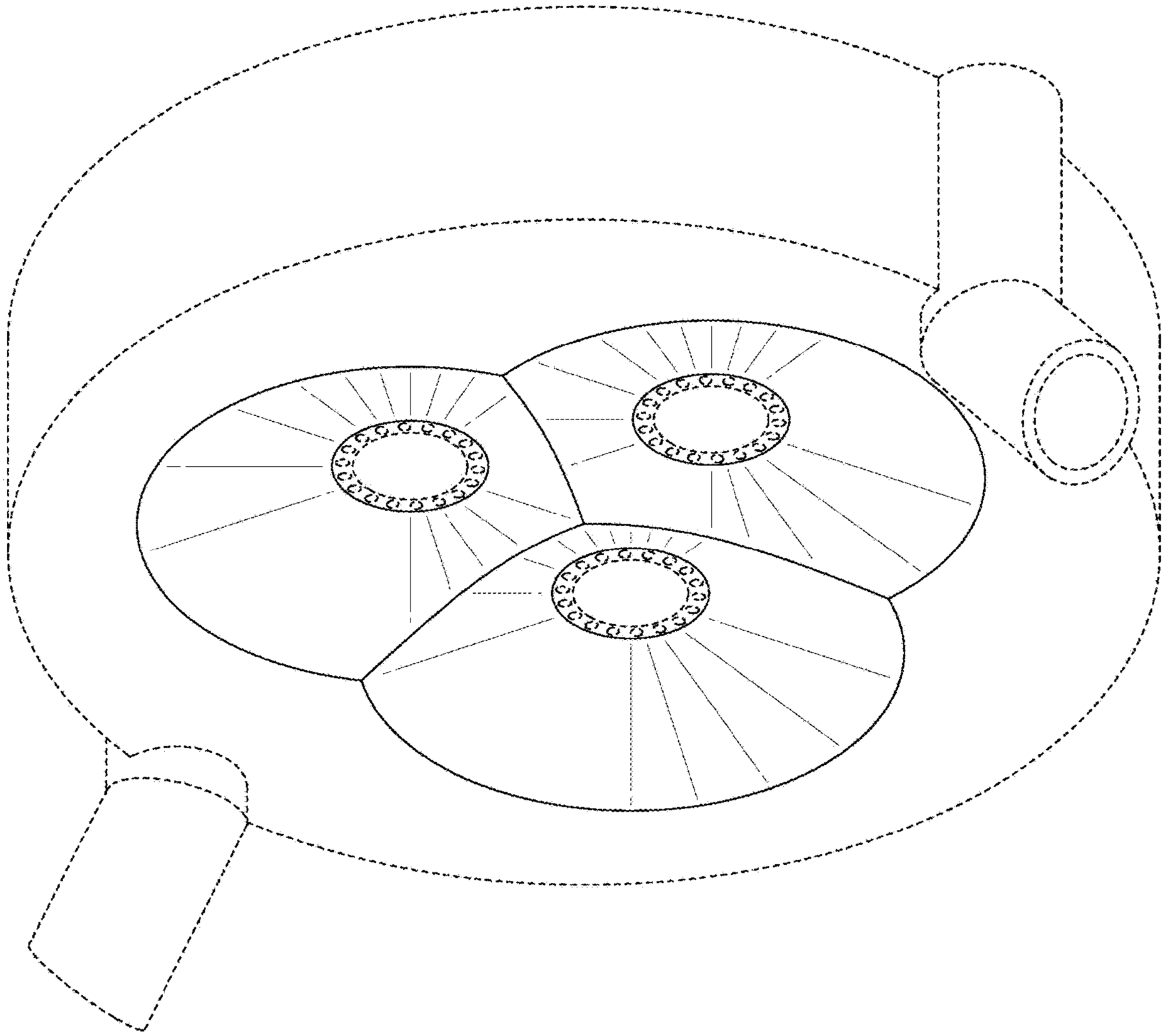

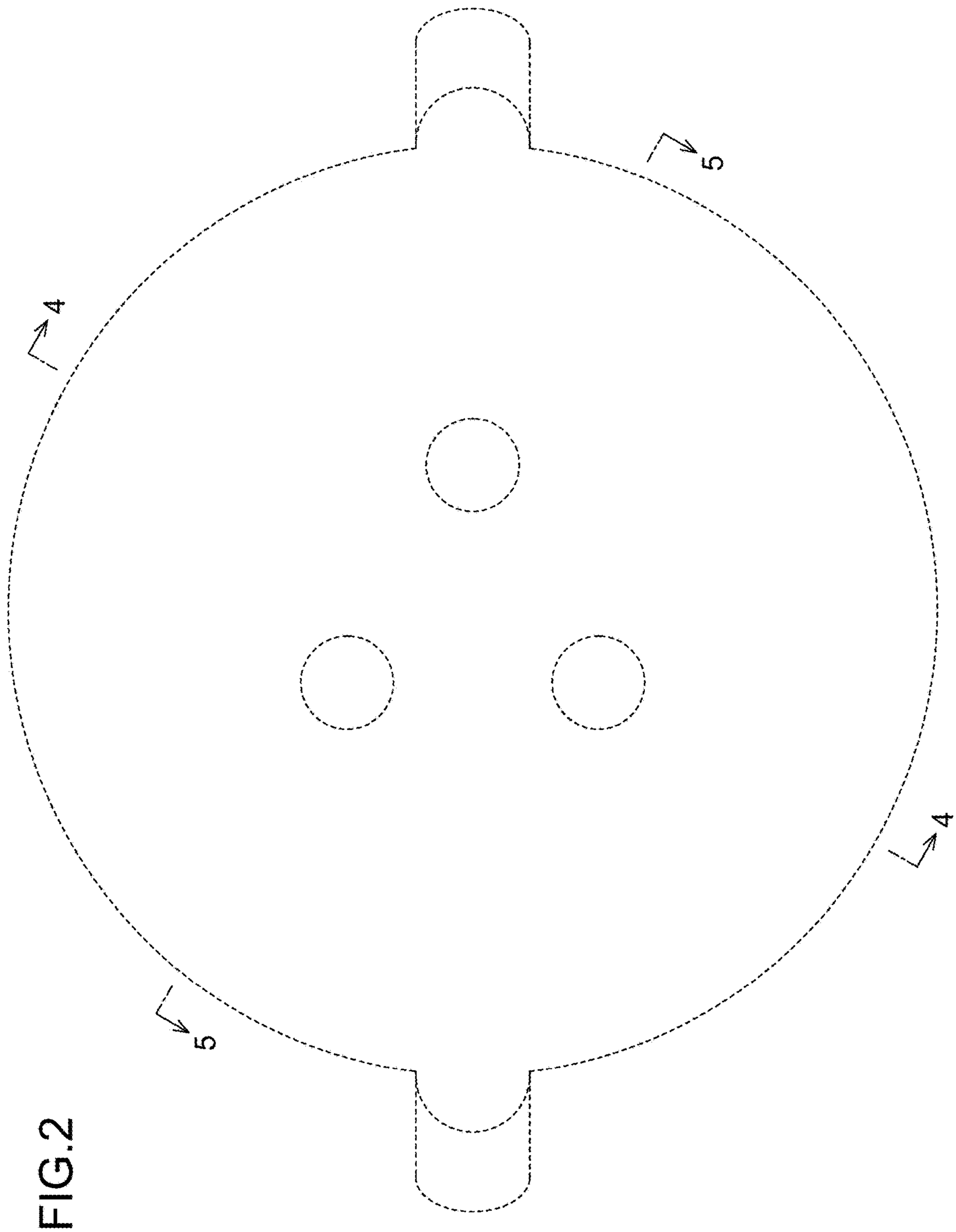

FIG.2

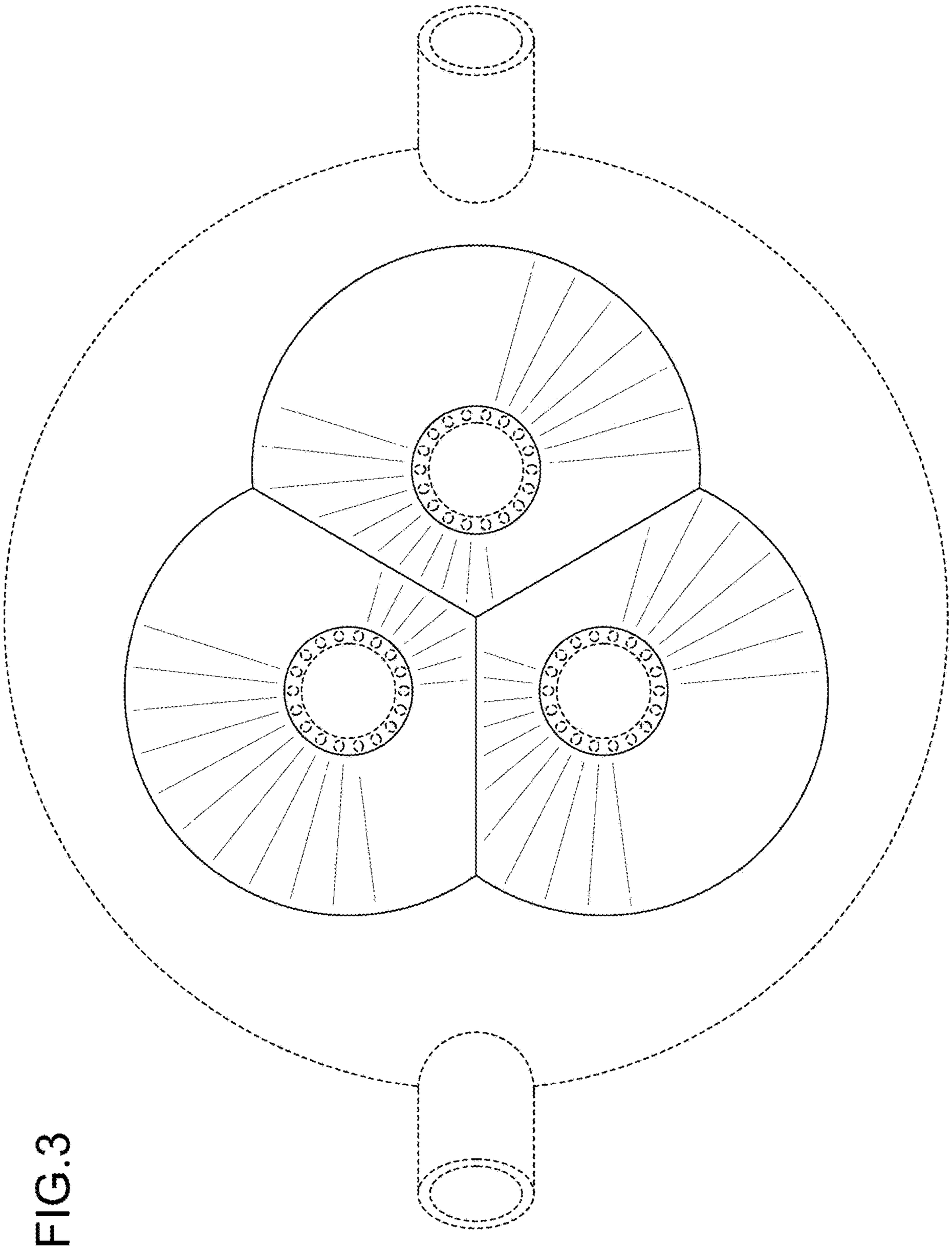

FIG.3

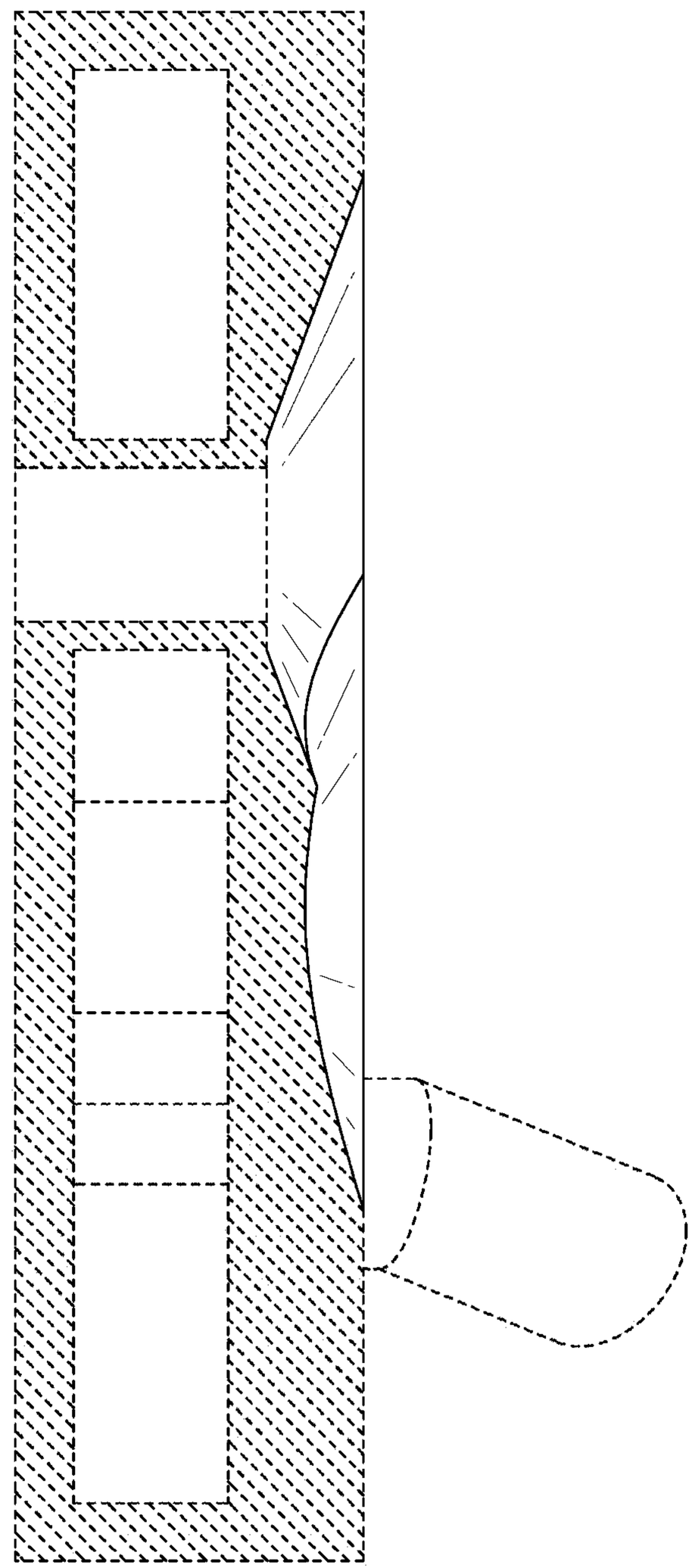

FIG.4

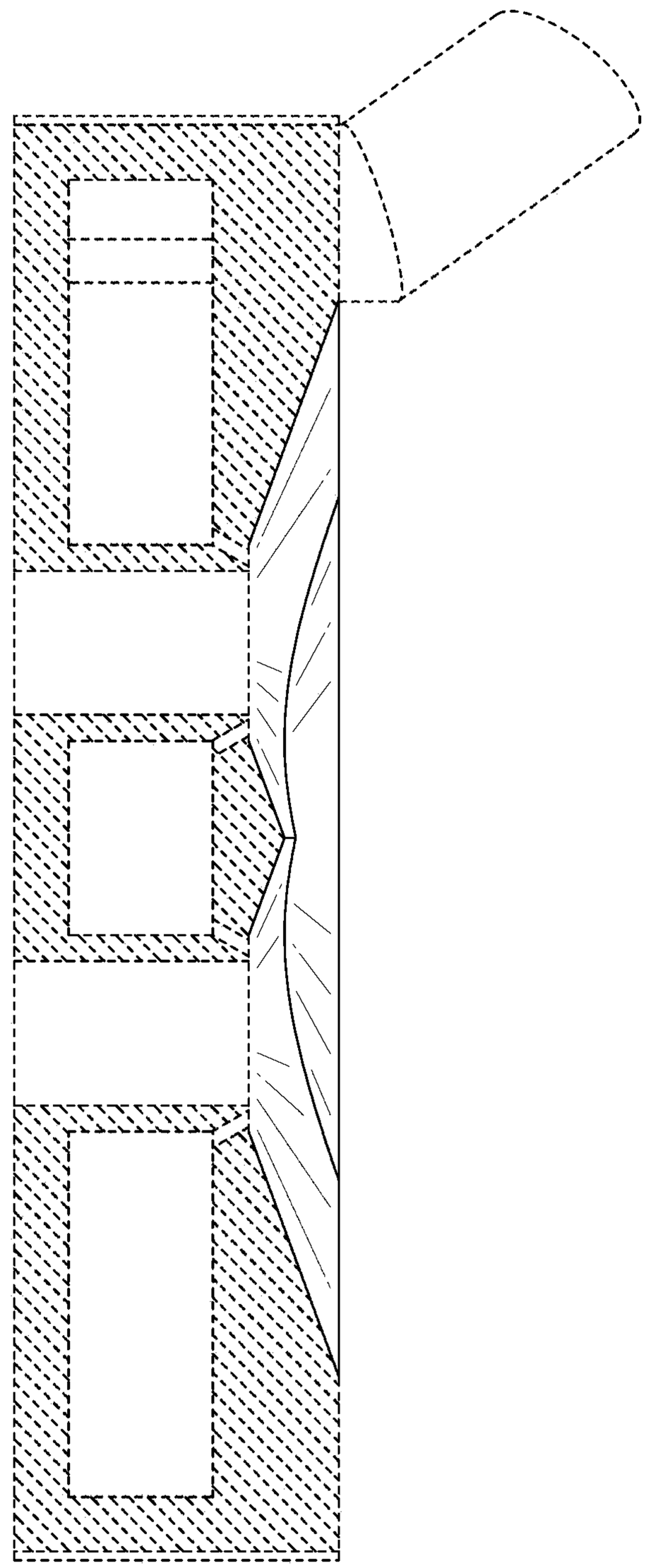

FIG.5