US00D982618S

(12) United States Design Patent

Chen

(10) Patent No.: US D982,618 S
(45) Date of Patent: ** Apr. 4, 2023

(54) **GAS STRUT SUPPORT**

(71) Applicant: **ZHENGZHOU DAHUI NETWORK TECHNOLOGY CO. LTD**, Zhengzhou (CN)

(72) Inventor: **Penghui Chen**, Xinmi (CN)

(73) Assignee: **ZHENGZHOU DAHUI NETWORK TECHNOLOGY CO. LTD**, Zhengzhou (CN)

(**) Term: **15 Years**

(21) Appl. No.: **29/856,834**

(22) Filed: **Oct. 18, 2022**

(51) **LOC (14) Cl.** **15-03**

(52) **U.S. Cl.**
USPC **D15/28**; D12/223

(58) **Field of Classification Search**
USPC D23/213, 223, 229, 233, 249, 259–269, D23/365, 386, 387, 388, 397; D8/354, D8/382, 396; D7/312, 313; D24/112, D24/129; D15/7–9.3, 28, 32, 33; D12/223, 220; D6/324, 327, 328
CPC F16L 1/00; F16L 1/036; F16L 9/00; F16L 9/003; F16L 9/006; F16L 11/00; F16L 11/122; F16L 13/00; F16L 13/002; F16L 13/146; F16L 15/00; F16L 23/00; F16L 23/14; F16L 23/0283; F16L 25/0009; F16L 37/00; F16L 41/00; F16L 41/02; F16L 41/025; F16L 43/00; F16L 47/26; F16L 47/32; F16L 17/00; F16L 17/02; F16L 17/025; F16L 17/035; F16L 17/06; F16L 17/063; F16L 17/067; F16L 17/073; F16L 17/08; F16L 21/00; F16L 21/022; A47L 9/02; A47L 9/0416; A61M 39/00; A61M 39/223; F16B 2/00; F16B 2/08; F16B 7/00; F16B 7/04; F16B 7/0486; F16B 7/0493;
(Continued)

(56) **References Cited**

U.S. PATENT DOCUMENTS

4,427,188 A * 1/1984 Shimokura F16F 9/02 188/300
D619,626 S * 7/2010 Mihashi D15/28
(Continued)

Primary Examiner — Gino Colan
Assistant Examiner — David Obrien

(57) **CLAIM**

The ornamental design for a gas strut support, as shown and described.

DESCRIPTION

FIG. **1** is a perspective view of a gas strut support showing my new design;
FIG. **2** is another perspective view thereof;
FIG. **3** is another perspective view thereof;
FIG. **4** is a front elevational view thereof;
FIG. **5** is a rear elevational view thereof;
FIG. **6** is a left side elevational view thereof;
FIG. **7** is a right side elevational view thereof;
FIG. **8** is a top plan view thereof;
FIG. **9** is a bottom plan view thereof;
FIG. **10** is an enlarged view of portion **10** shown in FIG. **1**;
FIG. **11** is an enlarged view of portion **11** shown in FIG. **1**;
FIG. **12** is an enlarged view of portion **12** shown in FIG. **2**;
FIG. **13** is an enlarged view of portion **13** shown in FIG. **2**; and,
FIG. **14** is an enlarged view of portion **14** shown in FIG. **3**.
The dash-dash broken lines in the drawings depict portions of the gas strut support that form no part of the claimed design. The dot-dash broken lines represent boundaries of the enlarged portions and form no part of the claimed design.

1 Claim, 14 Drawing Sheets

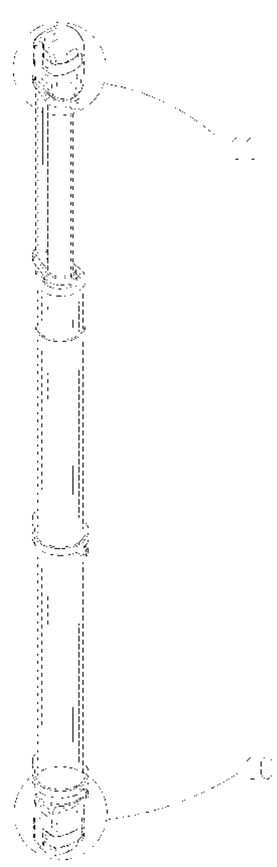

(58) **Field of Classification Search**
CPC F16B 2012/103; F16B 12/40; F16B 21/00; F16B 21/02; F16B 23/00; F16B 23/0015; F16B 23/0046; F16B 35/00; F16B 35/044; F16B 37/00; F21V 35/00; G09B 25/04; E05F 3/00; E05F 3/02; F16F 9/00; F16F 9/02; F16F 9/0209; F16F 9/0218; F16F 9/56
See application file for complete search history.

(56) **References Cited**

U.S. PATENT DOCUMENTS

D621,424	S	*	8/2010	Mihashi	D15/28
D621,425	S	*	8/2010	Mihashi	D15/28
D621,854	S	*	8/2010	Mihashi	D15/28
D723,998	S		3/2015	Hansen et al.	
10,119,591	B1	*	11/2018	Duvall	F16F 9/0218
2008/0041680	A1	*	2/2008	Mintgen	F16F 9/0209 188/301
2010/0107867	A1	*	5/2010	Yoo	F16F 9/19 92/24
2018/0245659	A1	*	8/2018	Mehta	E05F 3/02
2019/0017563	A1	*	1/2019	Duvall	F16F 9/0218

* cited by examiner

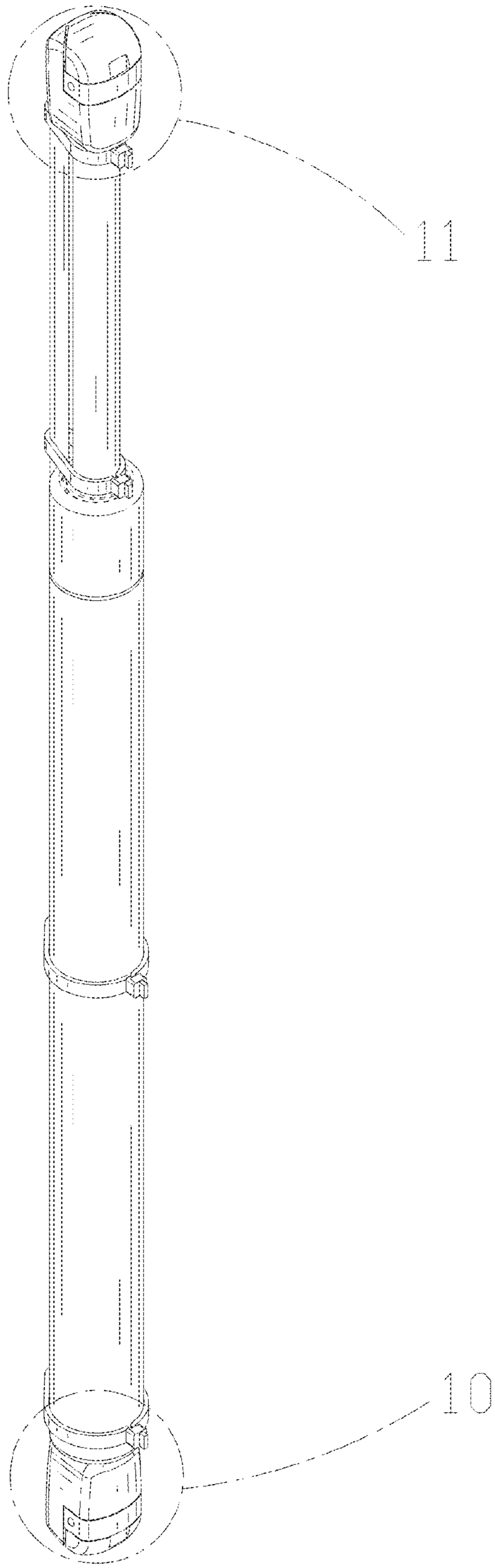

FIG. 1

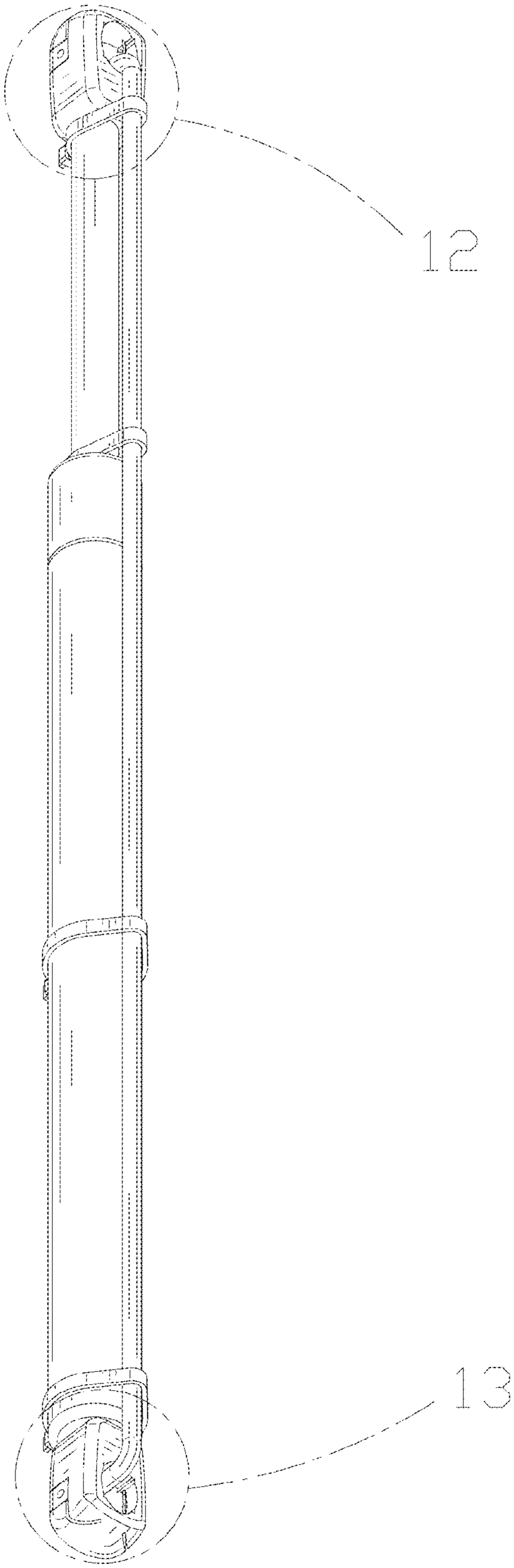

FIG. 2

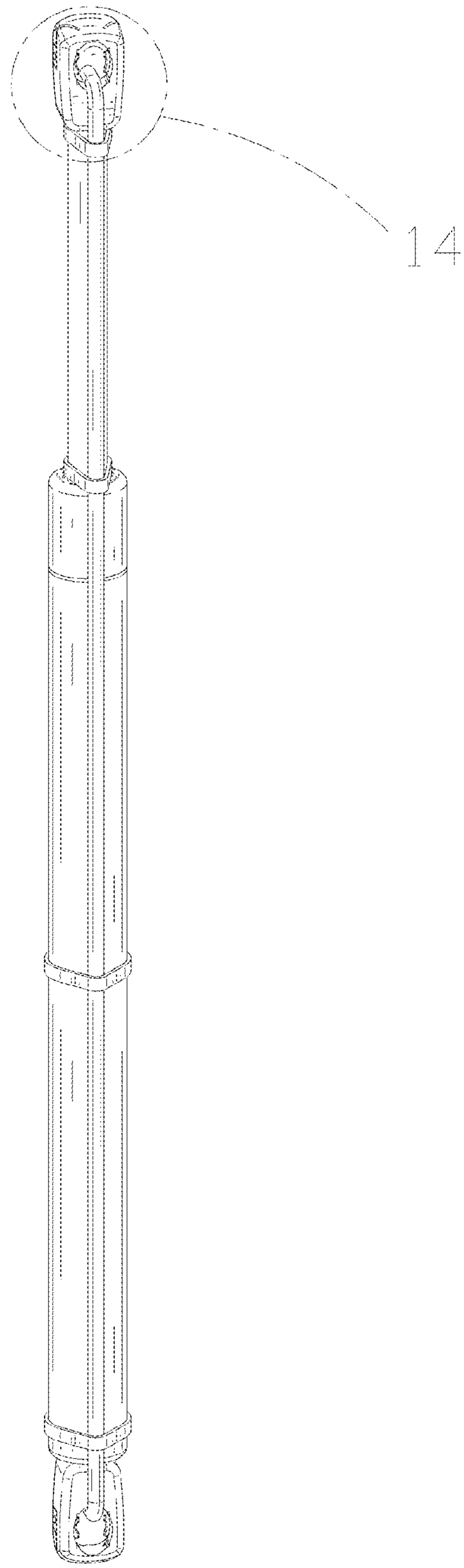

FIG. 3

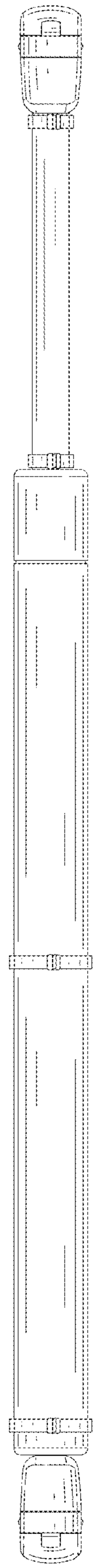

FIG. 4

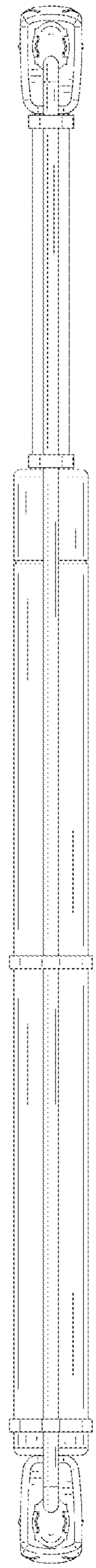

FIG. 5

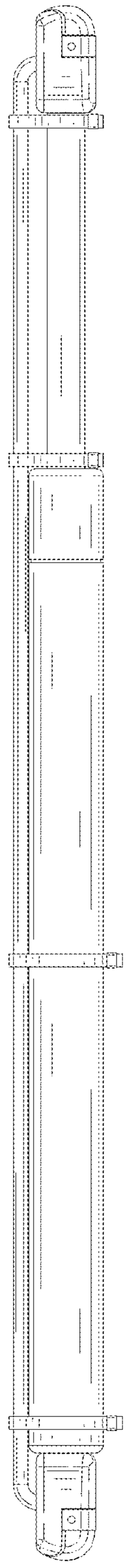

FIG. 6

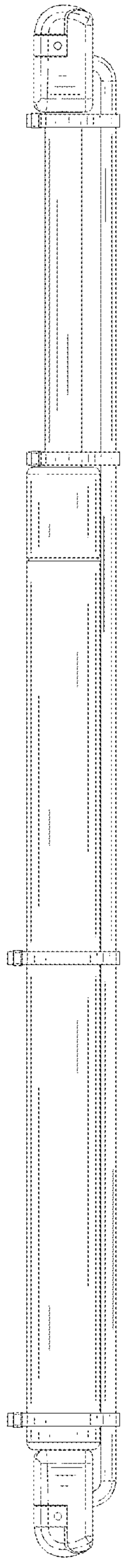

FIG. 7

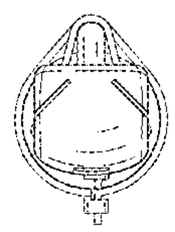

FIG. 8

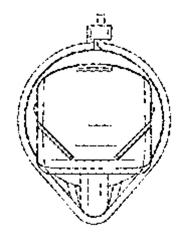

FIG. 9

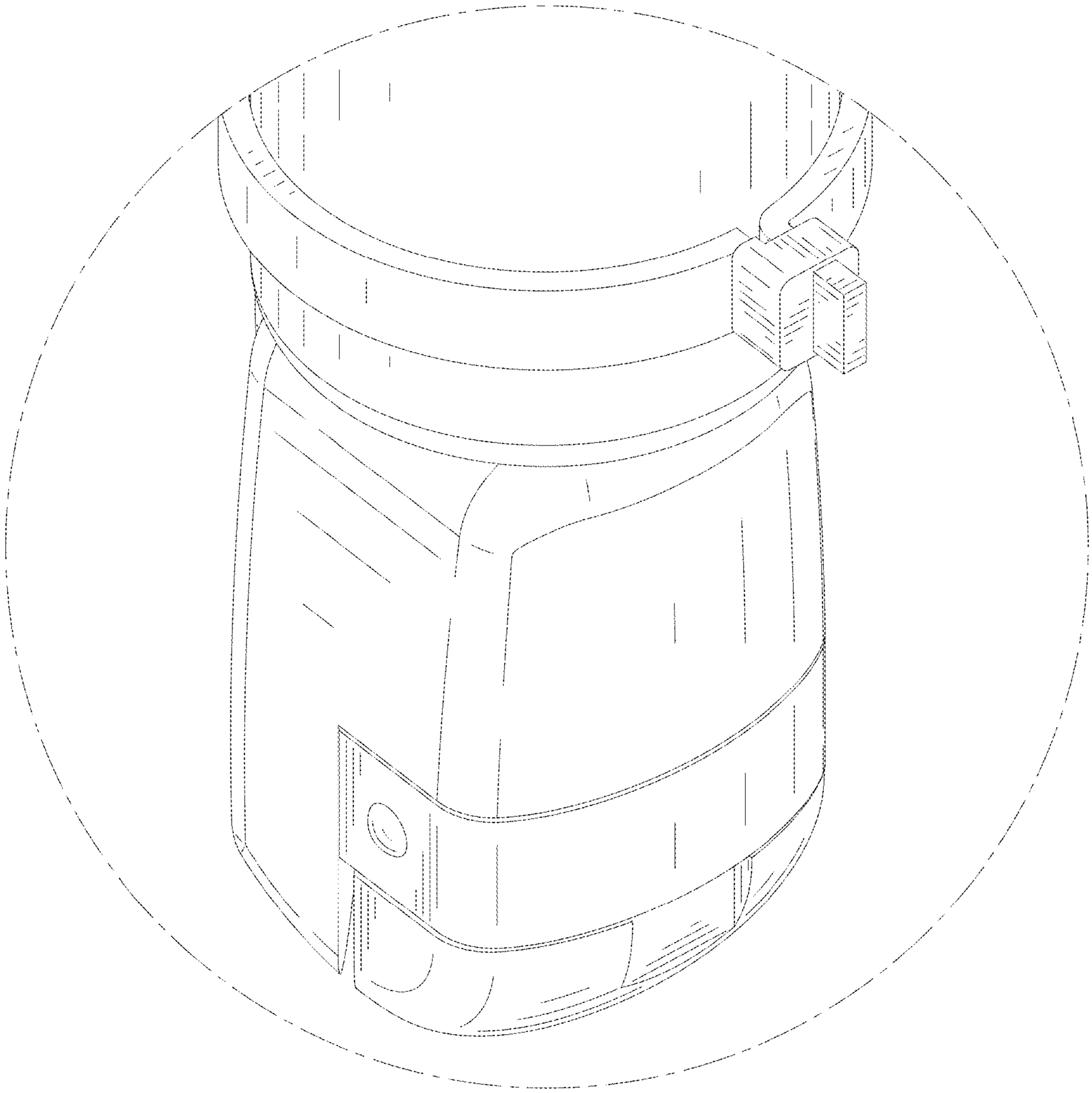

FIG. 10

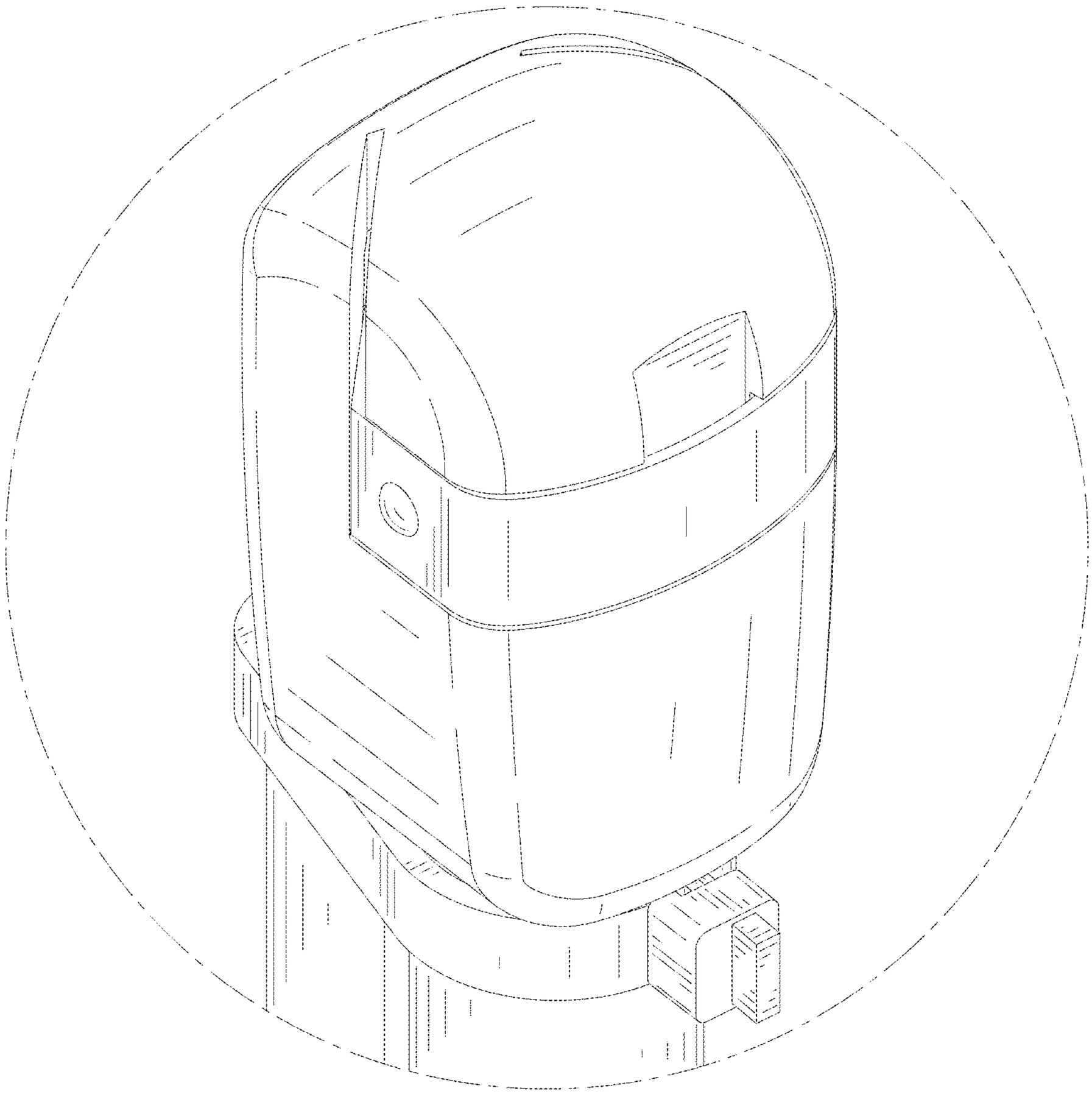

FIG. 11

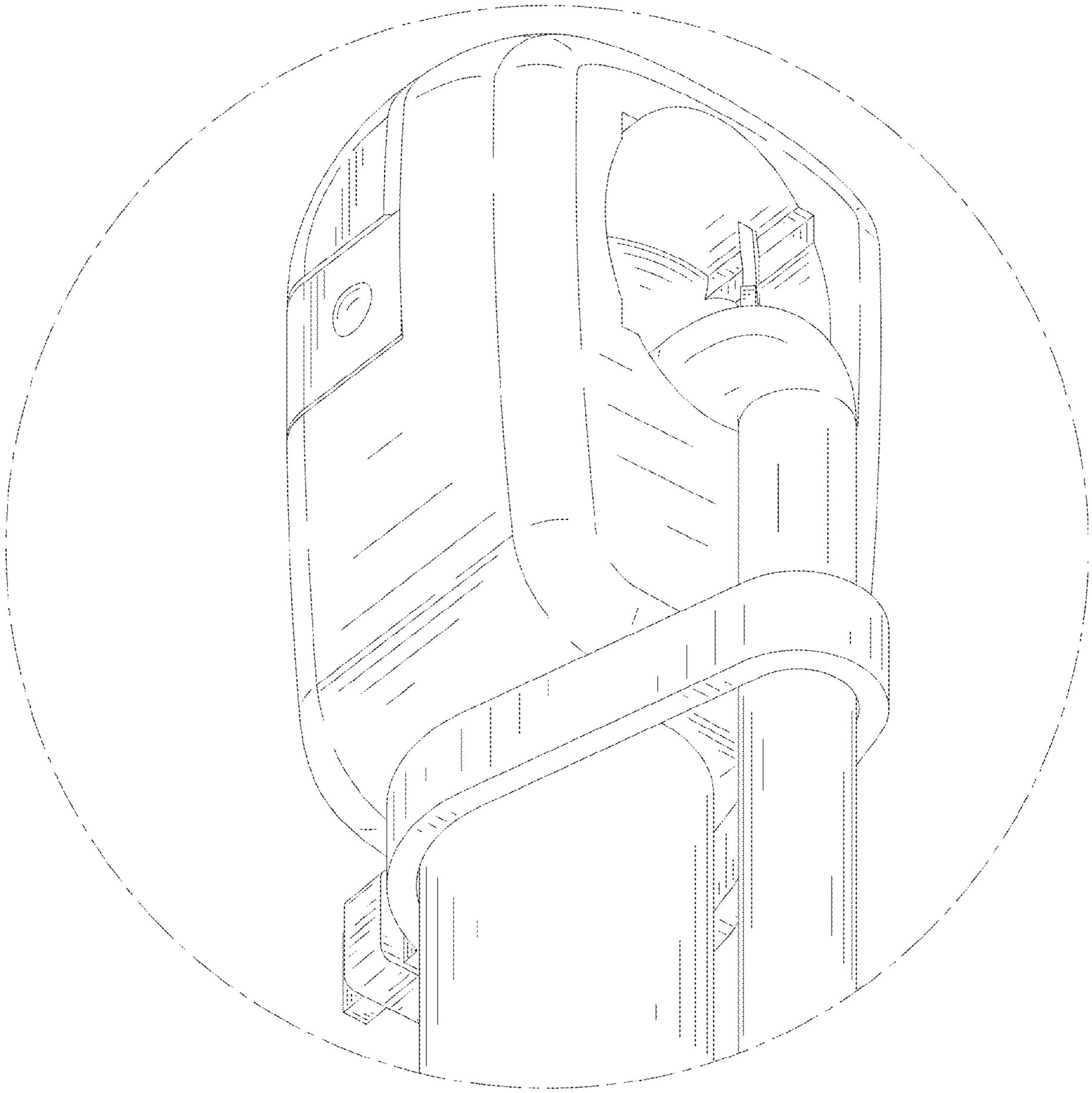

FIG. 12

FIG. 13

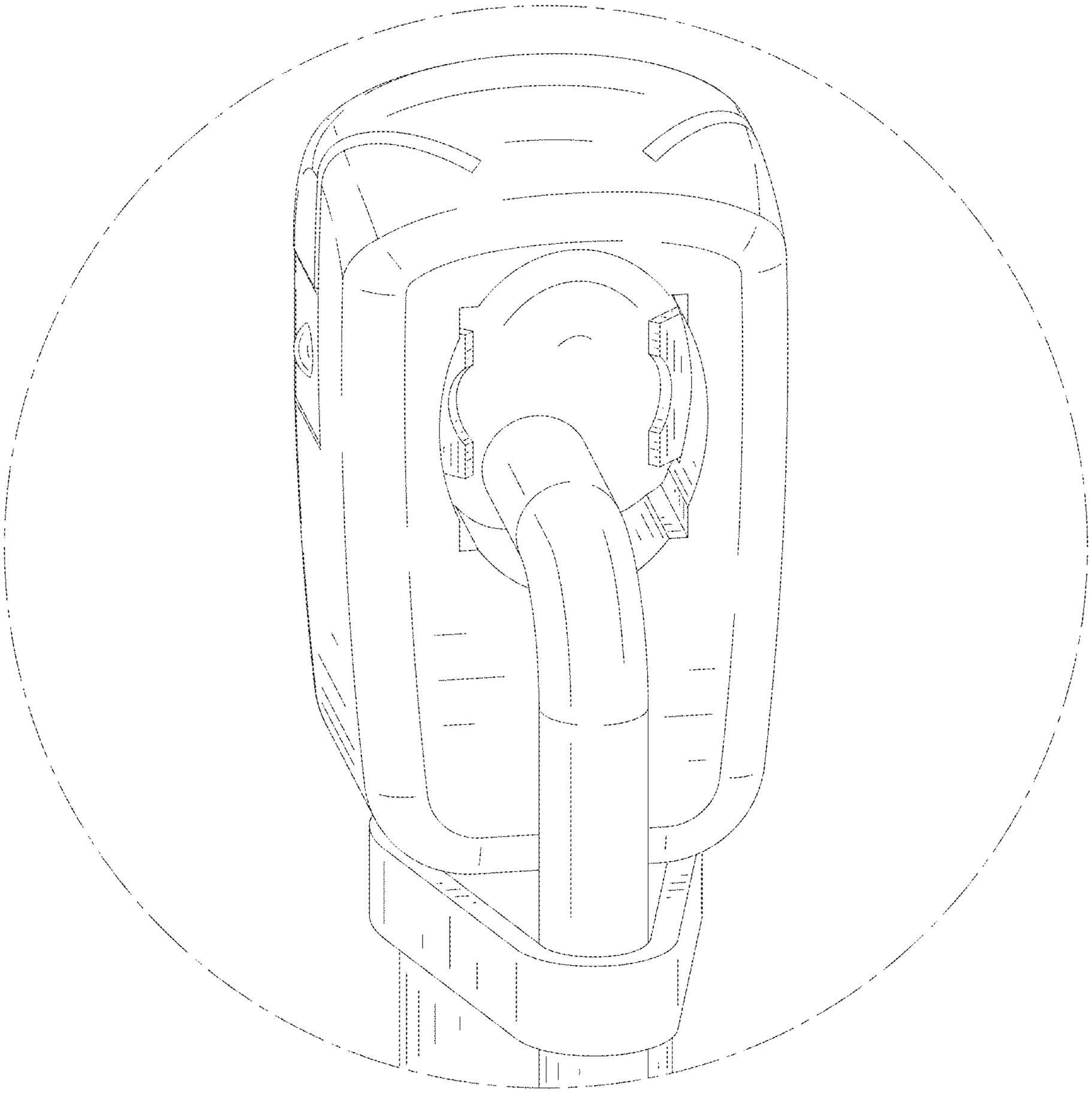

FIG. 14