US00D982364S

(12) United States Design Patent

Ranco

(10) Patent No.: US D982,364 S
(45) Date of Patent: ** *Apr. 4, 2023

(54) **TABLE**

(71) Applicant: **PLAST-MECCANICA SOCIETA' PER AZIONI**, Castelbellino (IT)

(72) Inventor: **Giuseppe Sandro Ranco**, Maiolati Spontini (IT)

(*) Notice: This patent is subject to a terminal disclaimer.

(**) Term: **15 Years**

(21) Appl. No.: **29/752,552**

(22) Filed: **Sep. 28, 2020**

(51) **LOC (14) Cl.** **06-03**

(52) **U.S. Cl.**
USPC **D6/691**

(58) **Field of Classification Search**
USPC D6/684–686, 691, 691.1–691.9
CPC A47B 7/00; A47B 13/00; A47B 13/002; A47B 13/04; A47B 13/06; A47B 13/08; A47B 13/10; A47B 13/12; A47B 21/00; A47B 41/00; A47B 2200/0001; A47B 2200/0011; A47B 2200/002
See application file for complete search history.

(56) **References Cited**

U.S. PATENT DOCUMENTS

D473,735 S * 4/2003 Moore D6/691.6
D781,085 S * 3/2017 Liu D6/691
D788,503 S * 6/2017 Duvigneau D6/691.6
D792,134 S * 7/2017 Bougay D6/691
D799,248 S * 10/2017 Miller D6/691
D801,092 S * 10/2017 Merritt D6/691
D855,363 S * 8/2019 Grassinger D6/691
D911,086 S * 2/2021 Crocker D6/691.6
D917,940 S * 5/2021 Averianov D6/691.6
D931,026 S * 9/2021 Crocker D6/691.6

* cited by examiner

Primary Examiner — Mary Ann Calabrese
(74) *Attorney, Agent, or Firm* — Egbert, McDaniel & Swartz, PLLC

(57) **CLAIM**

The ornamental design for a table, as shown and described.

DESCRIPTION

FIG. **1** is a perspective view of a table showing my new design.
FIG. **2** is a front view thereof;
FIG. **3** is a rear view thereof;
FIG. **4** is a side view thereof;
FIG. **5** is an opposite side view thereof;
FIG. **6** is a top view thereof; and,
FIG. **7** is a bottom view thereof.

1 Claim, 3 Drawing Sheets

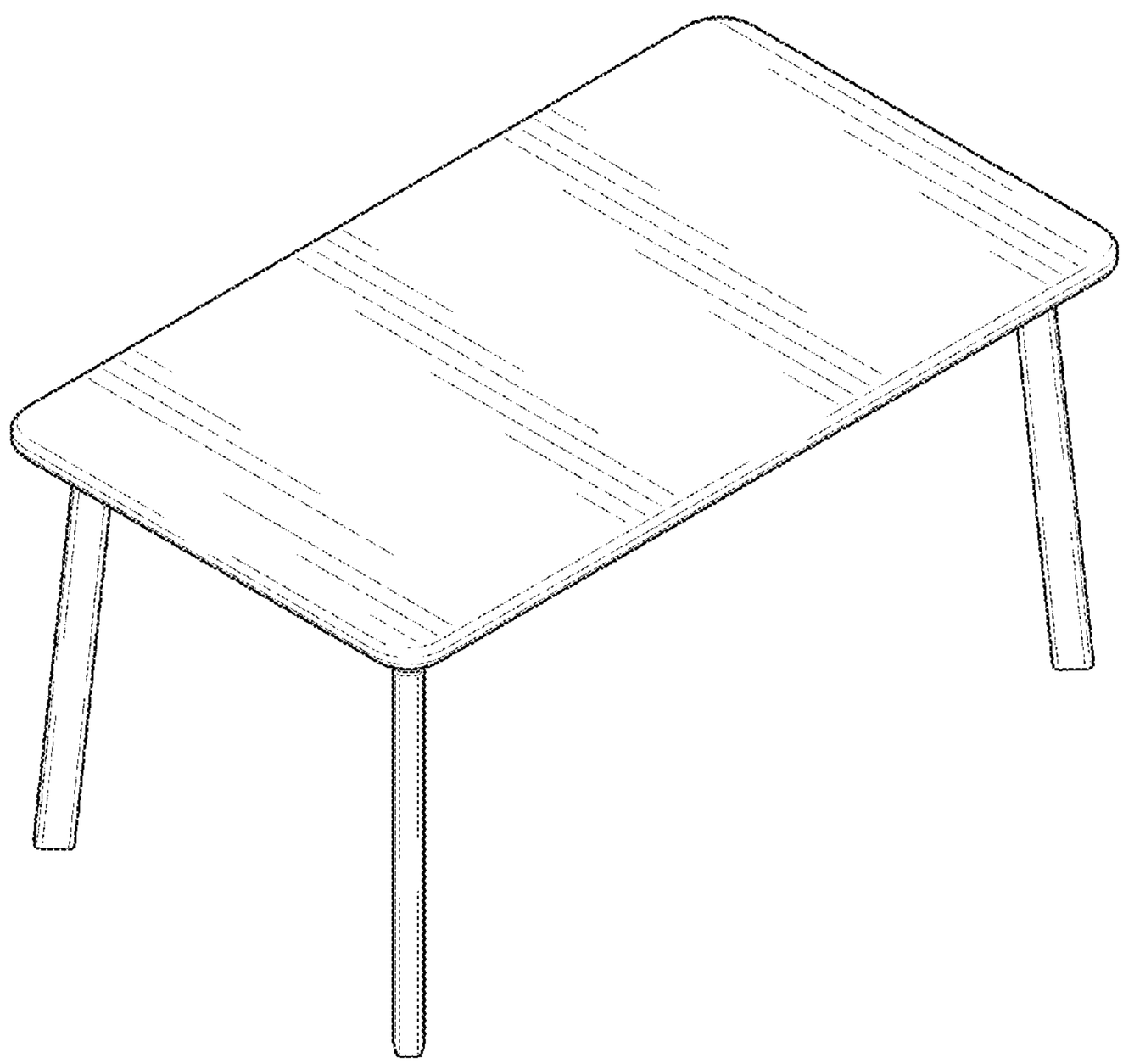

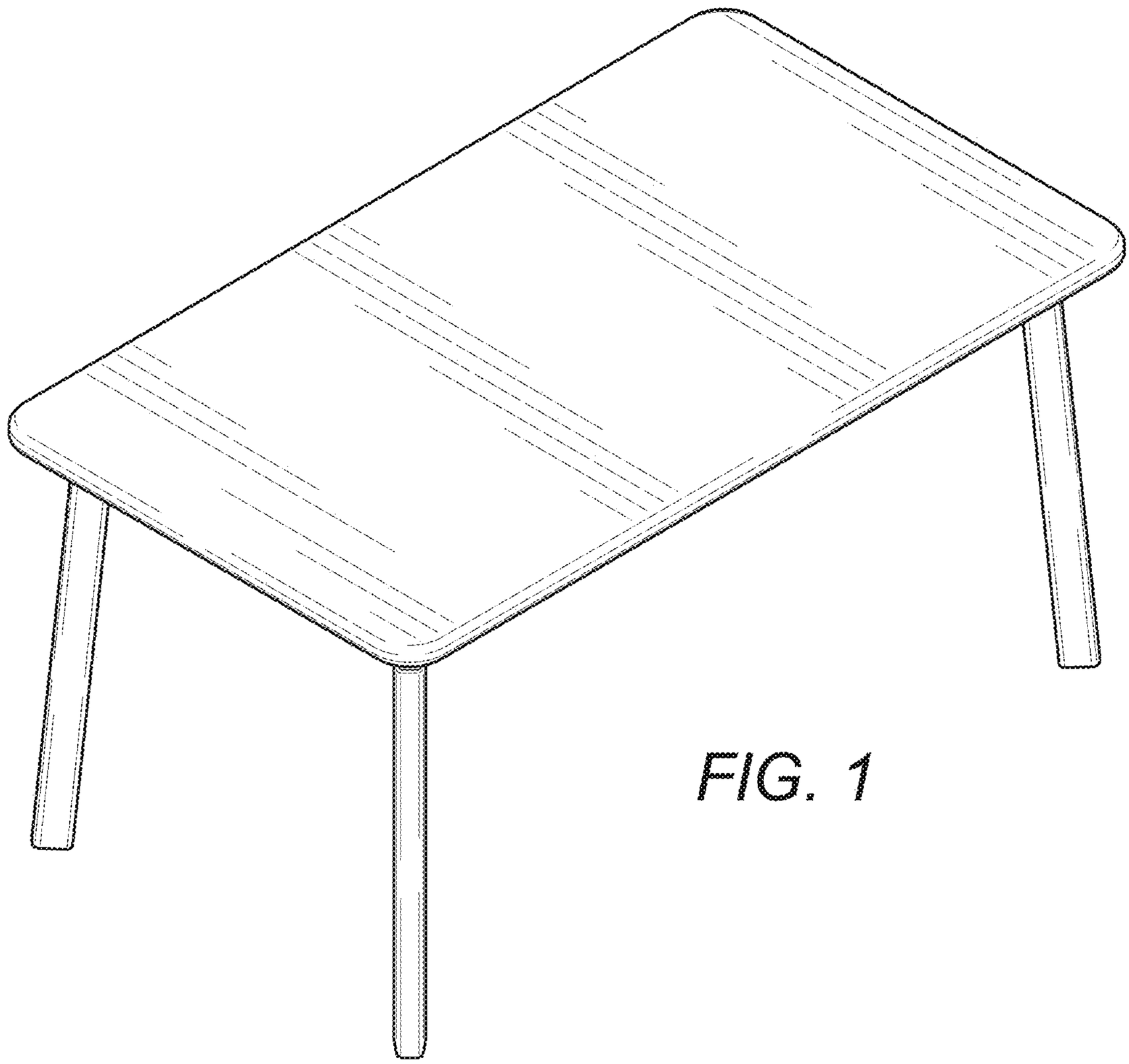

FIG. 1

FIG. 2

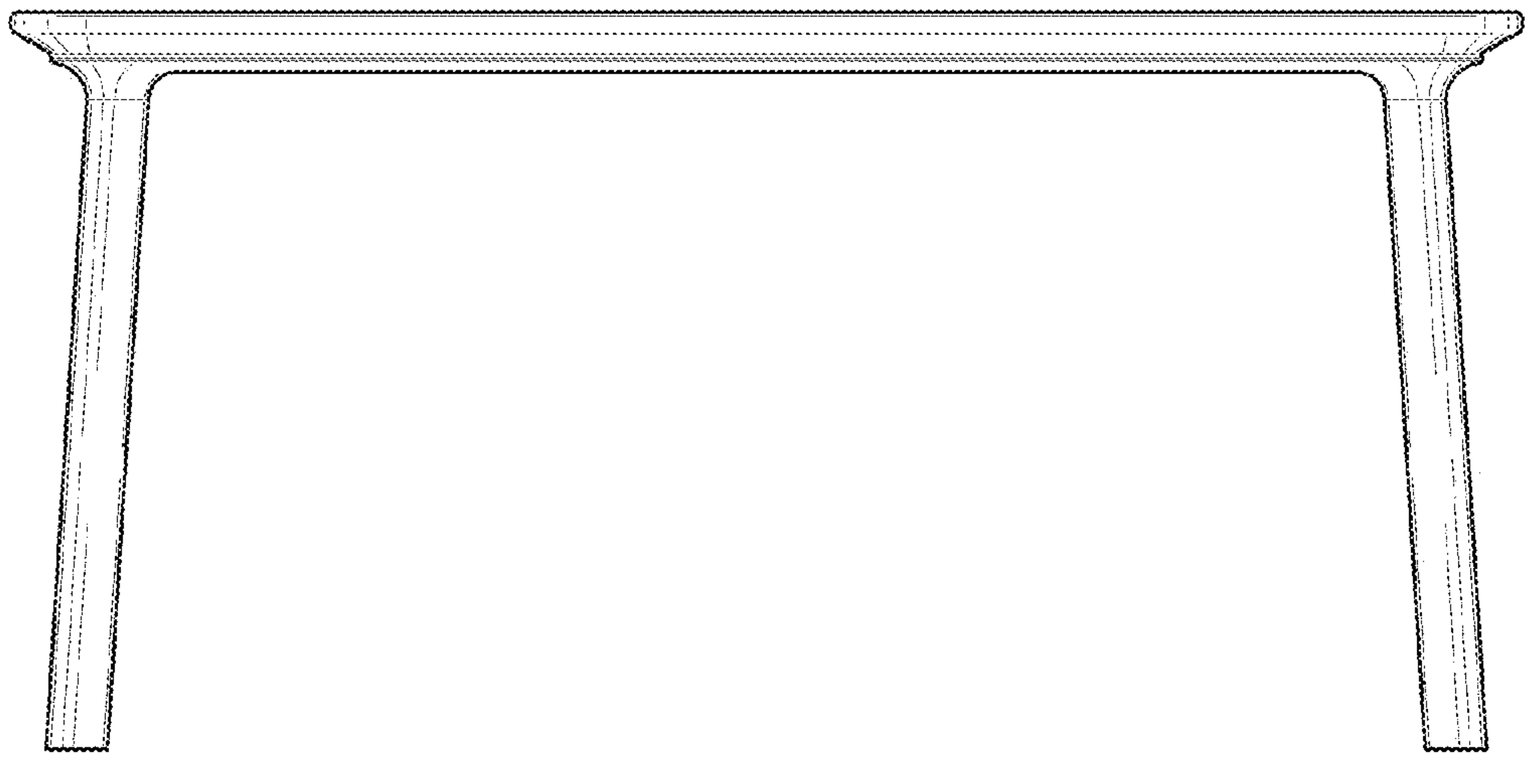

FIG. 3

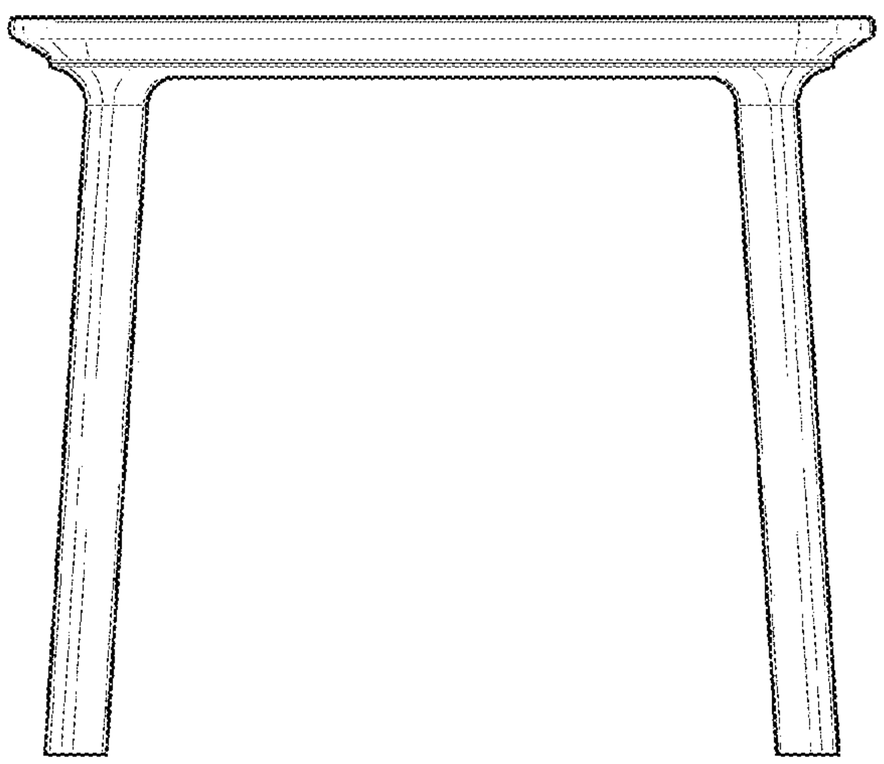

FIG. 4

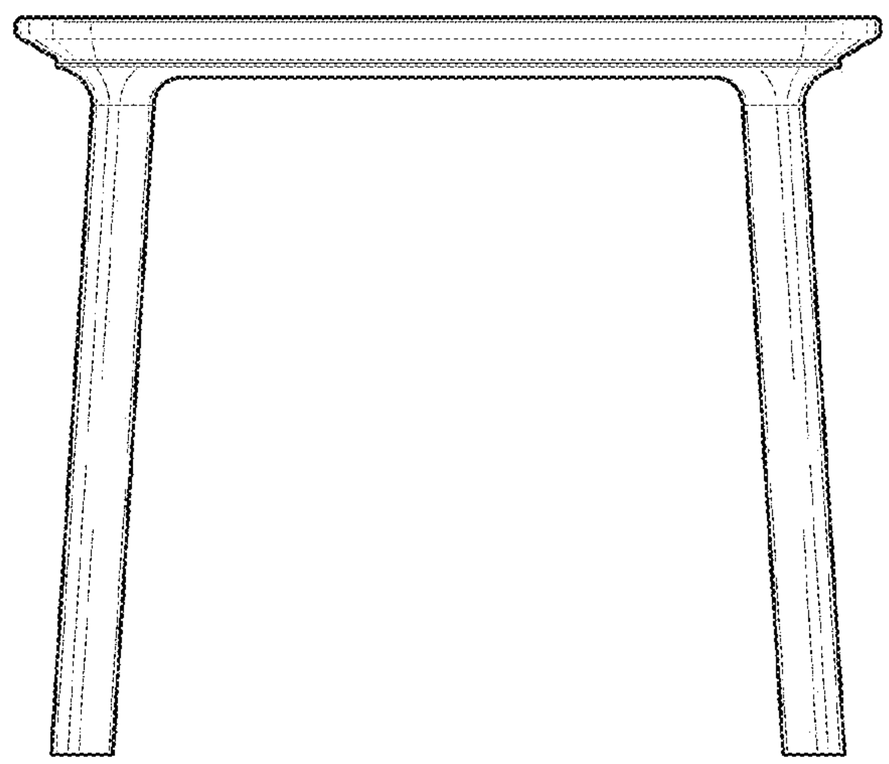

FIG. 5

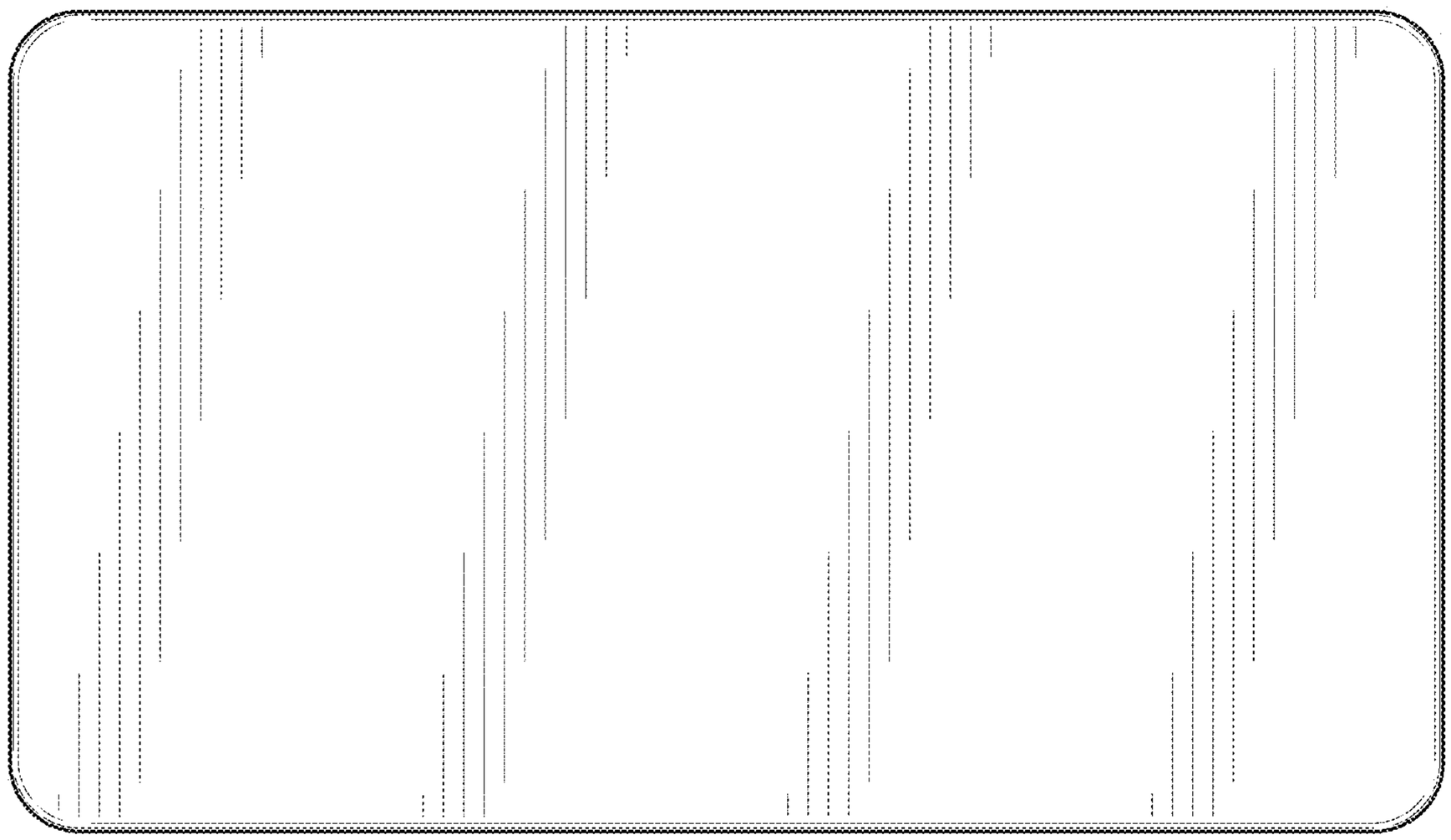

FIG. 6

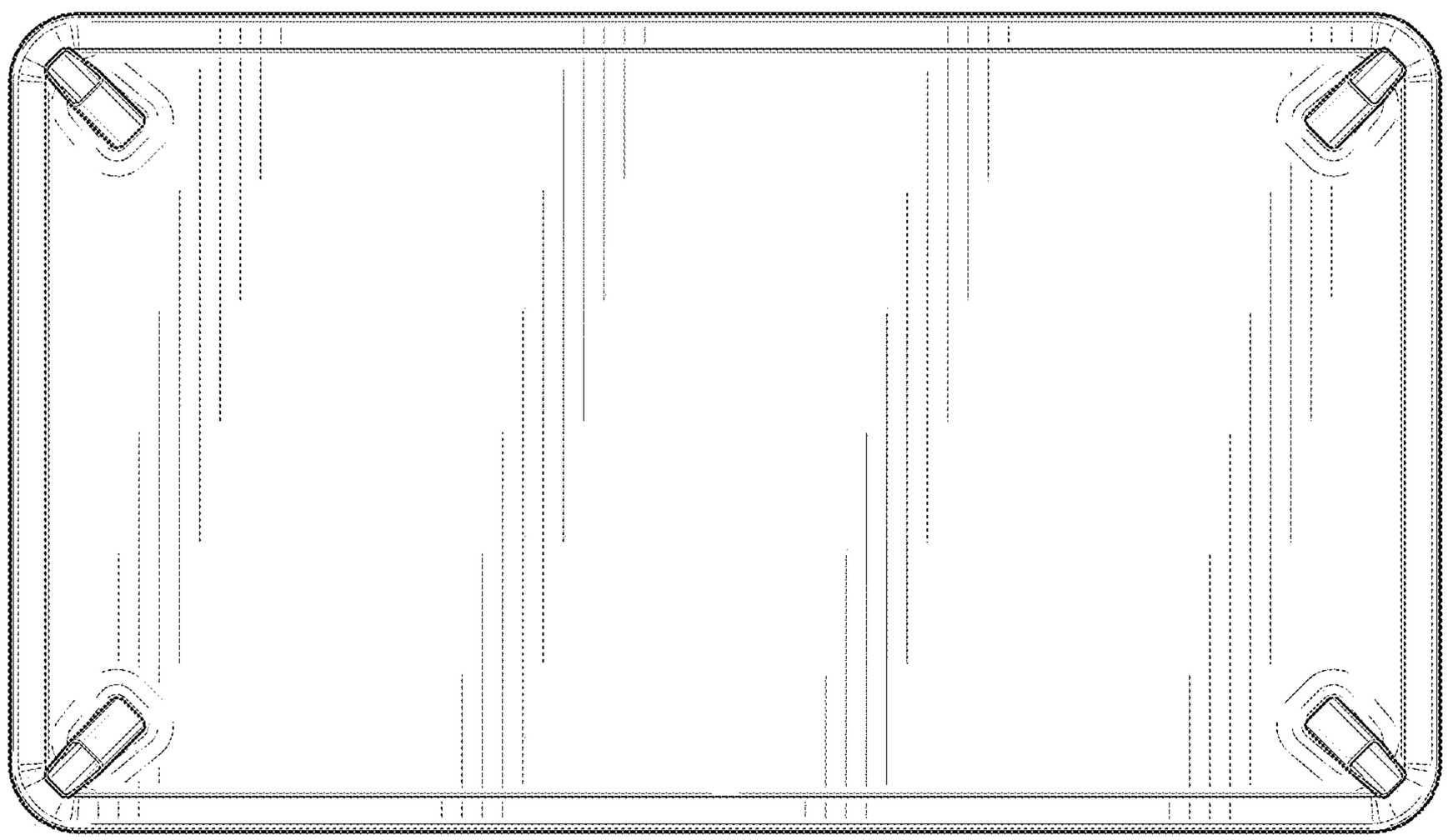

FIG. 7