US00D981373S

(12) United States Design Patent

Jiang et al.

(10) Patent No.: US D981,373 S
(45) Date of Patent: ** Mar. 21, 2023

(54) **EARPHONE**

(71) Applicant: **ONEPLUS TECHNOLOGY (SHENZHEN) CO., LTD.**, Guangdong (CN)

(72) Inventors: **Xinyi Jiang**, Guangdong (CN); **Haoran Liu**, Guangdong (CN); **Huijian Ai**, Guangdong (CN)

(73) Assignee: **ONEPLUS TECHNOLOGY (SHENZHEN) CO., LTD.**, Guangdong (CN)

(**) Term: **15 Years**

(21) Appl. No.: **29/778,076**

(22) Filed: **Apr. 9, 2021**

(30) **Foreign Application Priority Data**

Oct. 12, 2020 (CN) 202030605169.6

(51) **LOC (14) Cl.** **14-01**

(52) **U.S. Cl.**
USPC **D14/223**

(58) **Field of Classification Search**
USPC D14/223; D24/174; 128/864–866; 381/380–381
CPC H04R 1/10; H04R 25/00; H04R 25/02; H04R 1/1066; H04R 1/1016; H04R 5/033; H04R 5/0335; H04R 1/1091
See application file for complete search history.

(56) **References Cited**

U.S. PATENT DOCUMENTS

9,042,583 B2 * 5/2015 Buyens H04R 25/50 381/316
D801,314 S * 10/2017 Akana D14/223
D803,184 S * 11/2017 Loh Jun Kern D14/223
D804,806 S * 12/2017 Stueckemann D3/203.2
D806,388 S * 1/2018 Akana D3/294
D818,268 S * 5/2018 Akana D3/294
D820,810 S * 6/2018 Levine D14/205
D829,193 S * 9/2018 Cai D14/223
D830,345 S * 10/2018 Cai D14/223
D847,794 S * 5/2019 Guo D14/223
D847,795 S * 5/2019 Kim D14/223
D848,980 S * 5/2019 Kim D14/223
D848,982 S * 5/2019 Kim D14/223
D848,983 S * 5/2019 Kim D14/223
D861,647 S * 10/2019 Chen D14/223
D864,169 S * 10/2019 Min D14/223
D869,445 S * 12/2019 Hu D14/223
D872,711 S * 1/2020 Hu D14/223
D877,722 S * 3/2020 Yang D14/223
(Continued)

FOREIGN PATENT DOCUMENTS

CN 306261634 * 1/2021
CN 306620371 * 6/2021
EM 008442628-0001 * 2/2021

Primary Examiner — Paula Allen Greene
(74) *Attorney, Agent, or Firm* — Hodgson Russ LLP

(57) **CLAIM**

The ornamental design for an earphone, as shown and described.

DESCRIPTION

FIG. **1** is a front perspective view of an earphone, showing our new design;
FIG. **2** is a front perspective view thereof;
FIG. **3** is a front elevation view thereof;
FIG. **4** is a rear elevation view thereof;
FIG. **5** is a left side elevation view thereof;
FIG. **6** is a right side elevation view thereof;
FIG. **7** is a top plan elevation view thereof; and,
FIG. **8** is a bottom plan elevation view thereof.
The broken (dashed) lines show portions of the earphone that form no part of the claimed design.

1 Claim, 8 Drawing Sheets

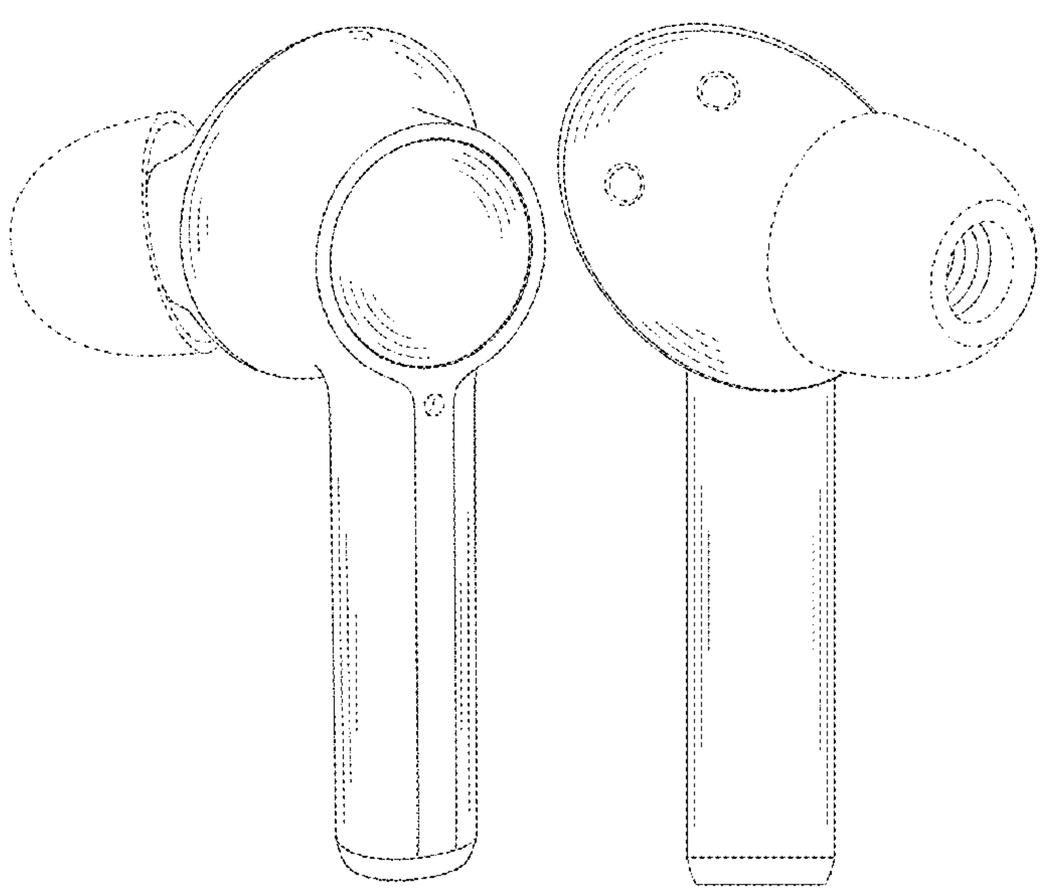

(56) **References Cited**

U.S. PATENT DOCUMENTS

D878,045 S * 3/2020 Akana D3/274
D881,572 S * 4/2020 Wang D3/294
D890,724 S * 7/2020 Li D14/223
D903,639 S * 12/2020 Yang D14/223
D905,018 S * 12/2020 Zhu D14/223
D907,008 S * 1/2021 Yao D14/223
D910,600 S * 2/2021 Zhang D14/223
D911,315 S * 2/2021 Hutchison D14/223
D912,011 S * 3/2021 Zhao H04R 1/1041
D14/205
D914,647 S * 3/2021 Yang D14/223
D914,648 S * 3/2021 Zhou D14/223
D916,683 S * 4/2021 Yao D14/223
D920,293 S * 5/2021 Chen D14/223
D921,615 S * 6/2021 Wu D14/223
D924,209 S * 7/2021 Wu D14/223
D940,691 S * 1/2022 Zhang D14/223
D944,197 S * 2/2022 Li D14/223
D953,300 S * 5/2022 Li D14/223
D957,366 S * 7/2022 Hachiri D14/223
D958,116 S * 7/2022 Yao D14/223
D961,508 S * 8/2022 Zhang D14/223
D962,202 S * 8/2022 Zhang D14/223
D967,066 S * 10/2022 Cai D14/223
D967,067 S * 10/2022 Cai D14/223
2011/0103637 A1* 5/2011 Yuen H04R 1/1041
381/380
2012/0237074 A1* 9/2012 Aase H04R 1/1058
29/858
2012/0275635 A1* 11/2012 Chen H04R 1/1075
381/380
2015/0382100 A1* 12/2015 Azmi H04R 1/1016
381/380
2017/0026738 A1* 1/2017 Tang H04R 1/1091
2017/0164087 A1* 6/2017 Kurtz H04R 1/1016
2020/0382856 A1* 12/2020 Liu H04R 1/2826

* cited by examiner

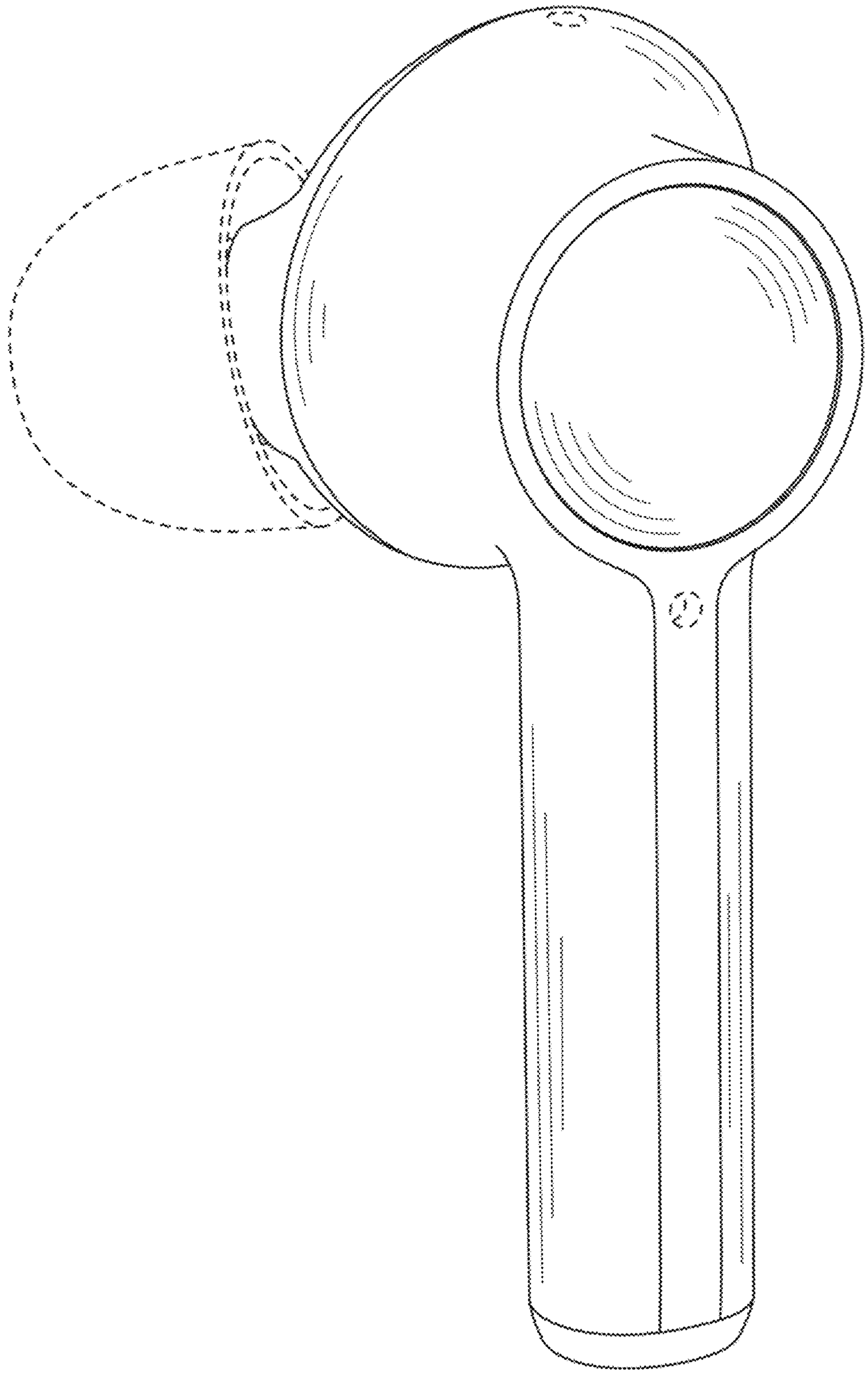

FIG. 1

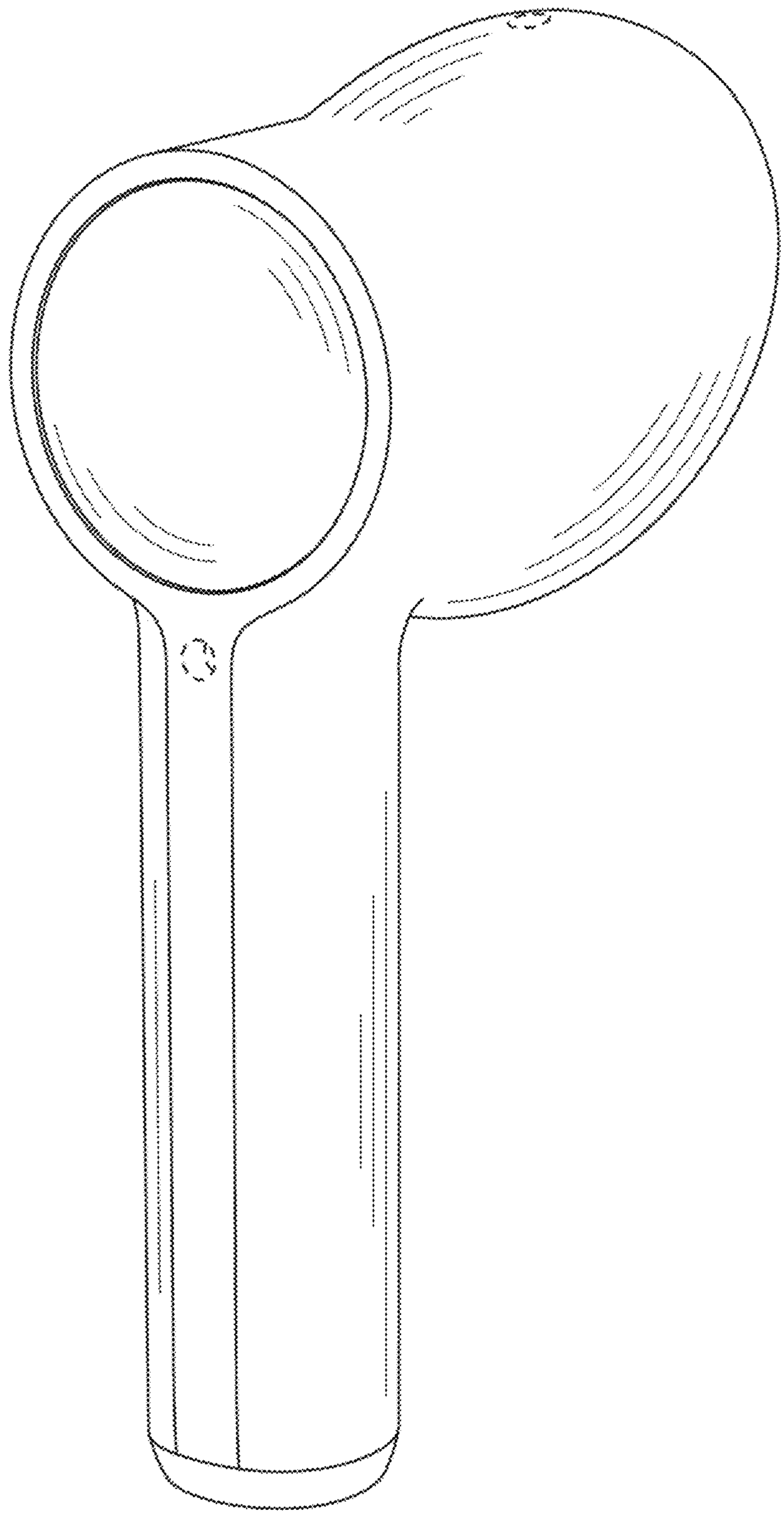

FIG. 2

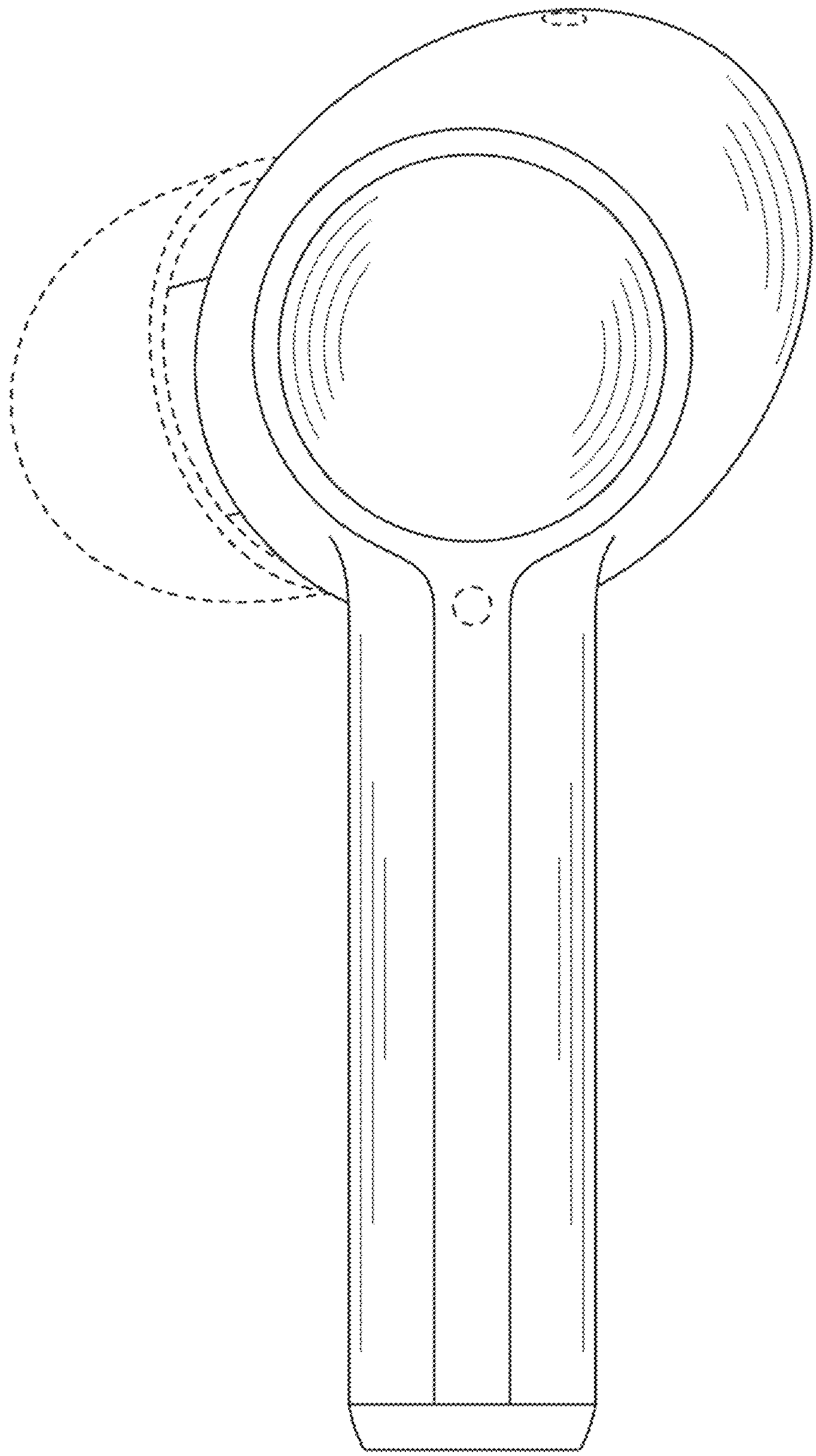

FIG. 3

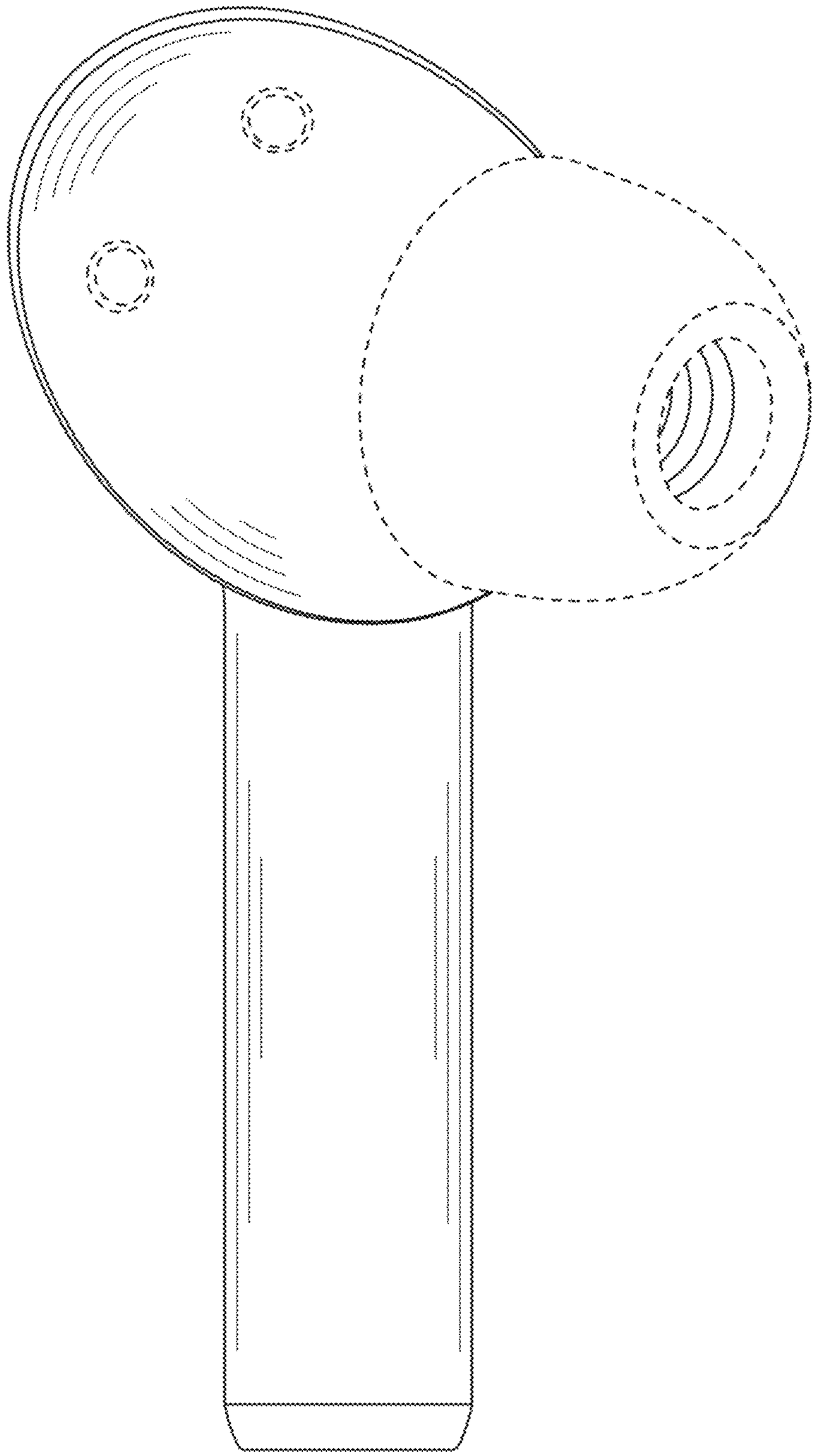

FIG. 4

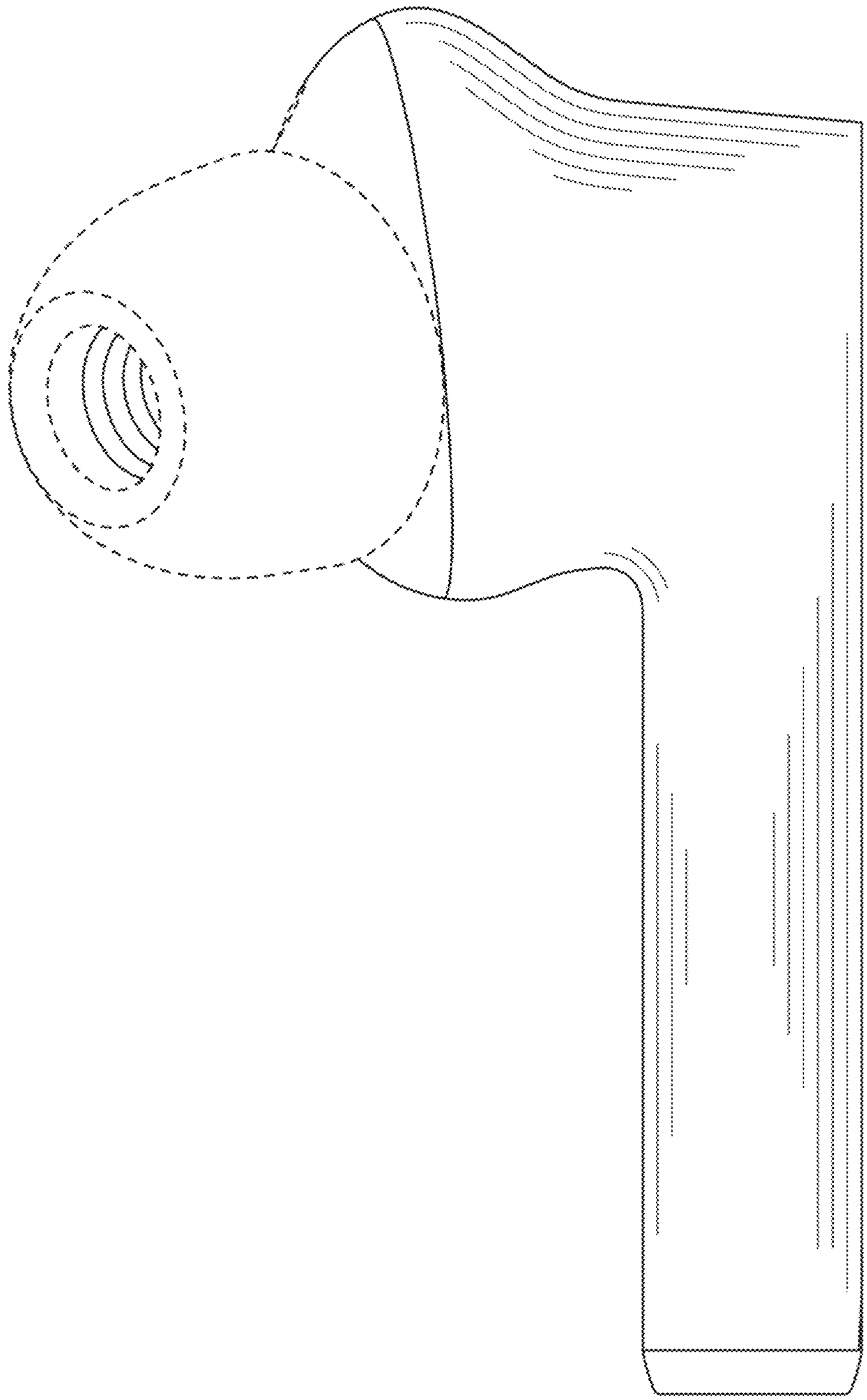

FIG. 5

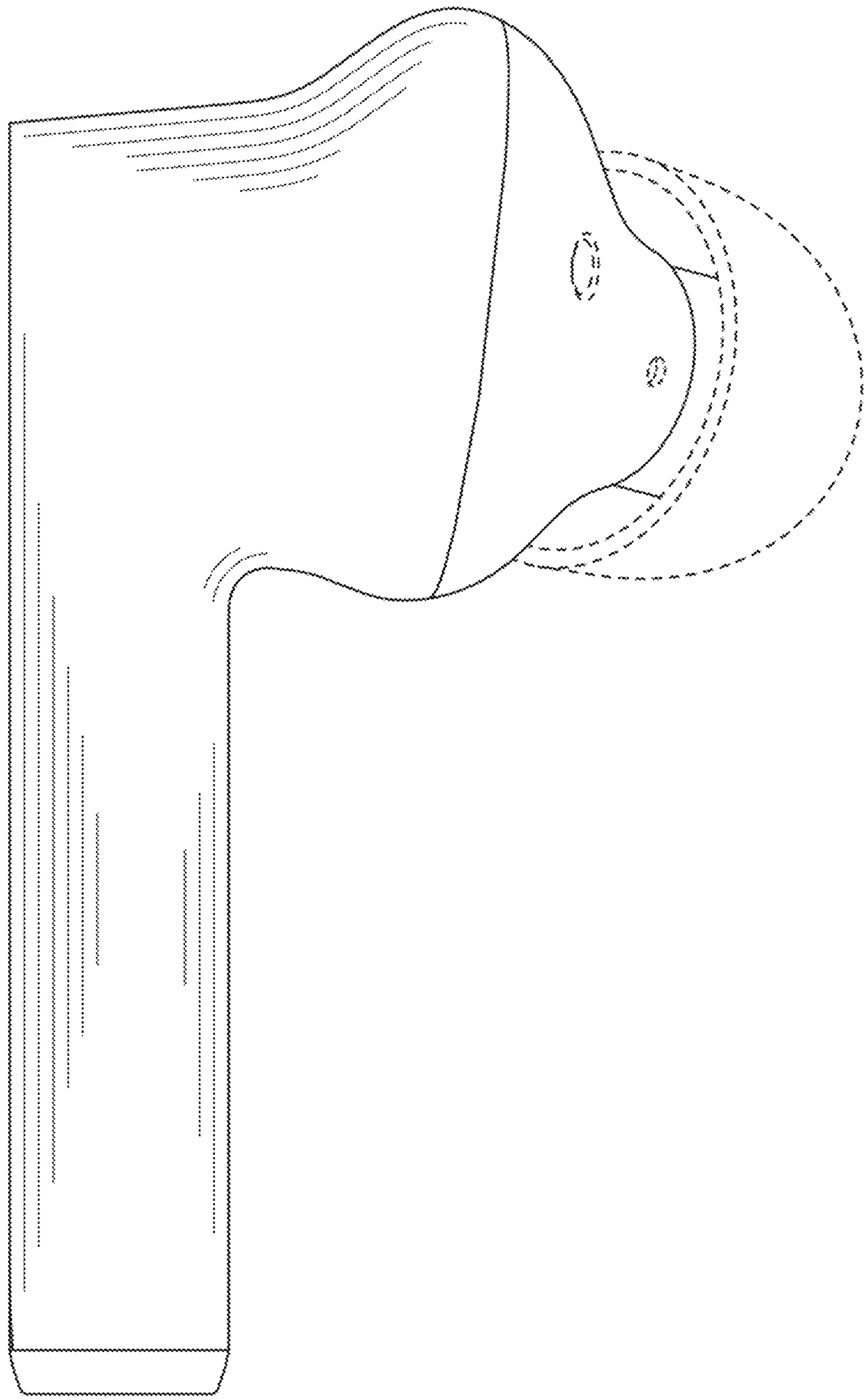

FIG. 6

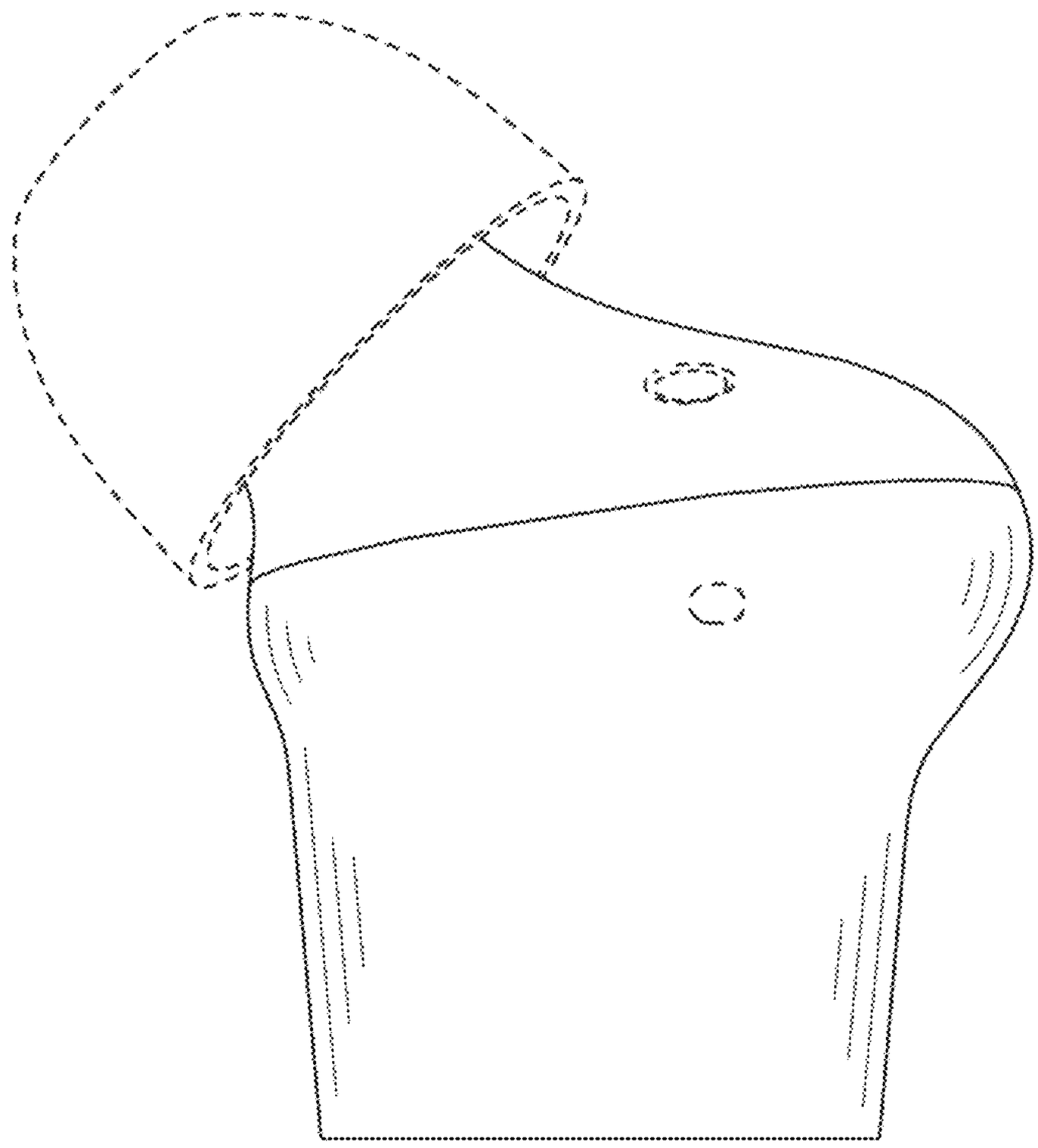

FIG. 7

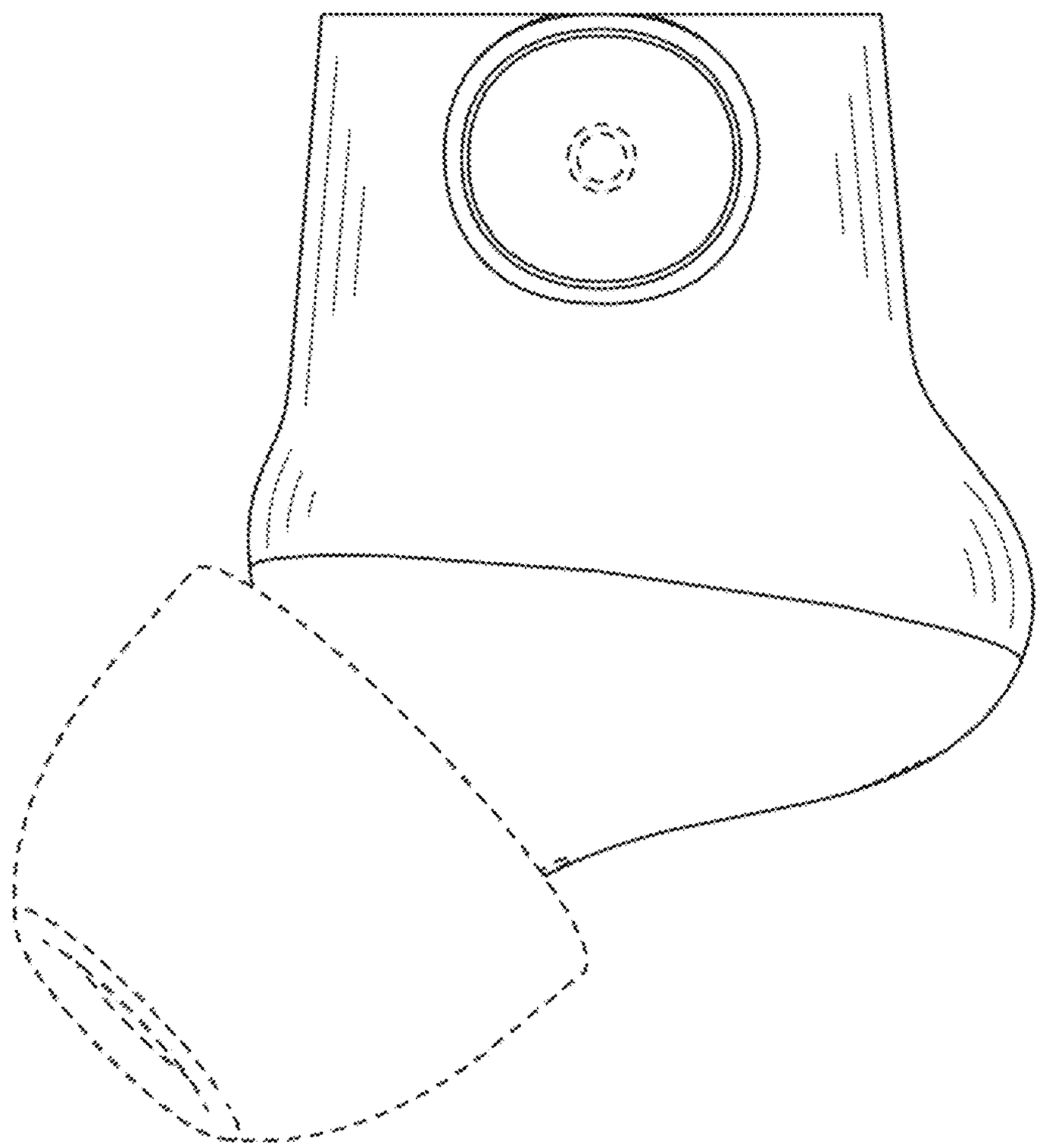

FIG. 8