US00D981205S

# (12) United States Design Patent

Lu

(10) Patent No.: US D981,205 S
(45) Date of Patent: ** Mar. 21, 2023

(54) **ELECTRONIC DOOR KNOB**

(71) Applicant: **Jun Lu**, Guangdong (CN)

(72) Inventor: **Jun Lu**, Guangdong (CN)

(**) Term: **15 Years**

(21) Appl. No.: **29/766,496**

(22) Filed: **Jan. 15, 2021**

(51) **LOC (14) Cl.** ..... **08-07**

(52) **U.S. Cl.**
USPC ..... **D8/330**

(58) **Field of Classification Search**
USPC ..... D8/334, 333, 343, 339, 335, 330, 331, D8/332; D99/28, 34, 35, 36
CPC ..... E05B 77/00; E05B 71/00; E05B 67/36; E05B 65/00; E05B 67/063; E05B 13/10; E05B 2047/0084; E05B 77/28; E05B 37/00; E05B 2047/0068; E05B 2047/0024; E05B 85/10; E05B 37/025; E05B 41/00
See application file for complete search history.

(56) **References Cited**

U.S. PATENT DOCUMENTS


| | | | | |
|---|---|---|---|---|
| 3,318,123 | A * | 5/1967 | Piazza | E05B 17/2042 70/447 |
| D297,807 | S * | 9/1988 | Fildan | D8/312 |
| 4,953,372 | A * | 9/1990 | Lovell | E05B 37/12 70/74 |
| 5,609,051 | A * | 3/1997 | Donaldson | G07C 9/0069 70/303 A |
| D382,790 | S * | 8/1997 | Hankel | D8/301 |
| 6,382,001 | B1 * | 5/2002 | Neeley | F16K 35/06 70/178 |
| 6,508,092 | B1 * | 1/2003 | Laabs | E05B 9/084 248/222.12 |
| D469,680 | S * | 2/2003 | Laabs | D8/343 |
| D482,596 | S * | 11/2003 | Laabs | D8/343 |
| D487,013 | S * | 2/2004 | Jenks | D8/343 |
| D627,622 | S * | 11/2010 | Cosby | D8/339 |
| 9,732,894 | B1 * | 8/2017 | Hartman | F16L 37/20 |
| D891,901 | S * | 8/2020 | Snodgrass | D8/311 |
| D918,013 | S * | 5/2021 | Yang | D8/333 |
| D923,454 | S * | 6/2021 | Chen | D8/331 |
| D926,018 | S * | 7/2021 | Snodgrass | D8/311 |
| D937,655 | S * | 12/2021 | Snodgrass | D8/301 |
| 2006/0065025 | A1 * | 3/2006 | Viviano | E05B 63/04 70/134 |

(Continued)

OTHER PUBLICATIONS

Bothstar Keypad Door Knob, by Bothstar on amazon.com. Dated May 16, 2021. Found online [Jul. 22, 2022]. https://www.amazon.com/BOTHSTAR-Keyless-Install-Bedroom-Deadbolt/dp/B094W2L9RM.*

(Continued)


*Primary Examiner* — Eliza Z Harvey
*Assistant Examiner* — Kayla Marie Bennett
(74) *Attorney, Agent, or Firm* — ScienBiziP, P.C.

(57) **CLAIM**

The ornamental design for an electronic door knob, as shown and described.

**DESCRIPTION**

FIG. **1** is a front and top perspective view of an electronic door knob, showing my design.
FIG. **2** is a rear and bottom perspective view thereof.
FIG. **3** is a front elevation view thereof.
FIG. **4** is a rear elevation view thereof.
FIG. **5** is a left side elevation thereof.
FIG. **6** is a right side elevation thereof.
FIG. **7** is a top plan view thereof; and,
FIG. **8** is a bottom plan view thereof.
The broken lines shown in the drawings are included for the purpose of illustrating portions of the electronic door knob for environmental structure that form no part of the claimed design.

**1 Claim, 8 Drawing Sheets**

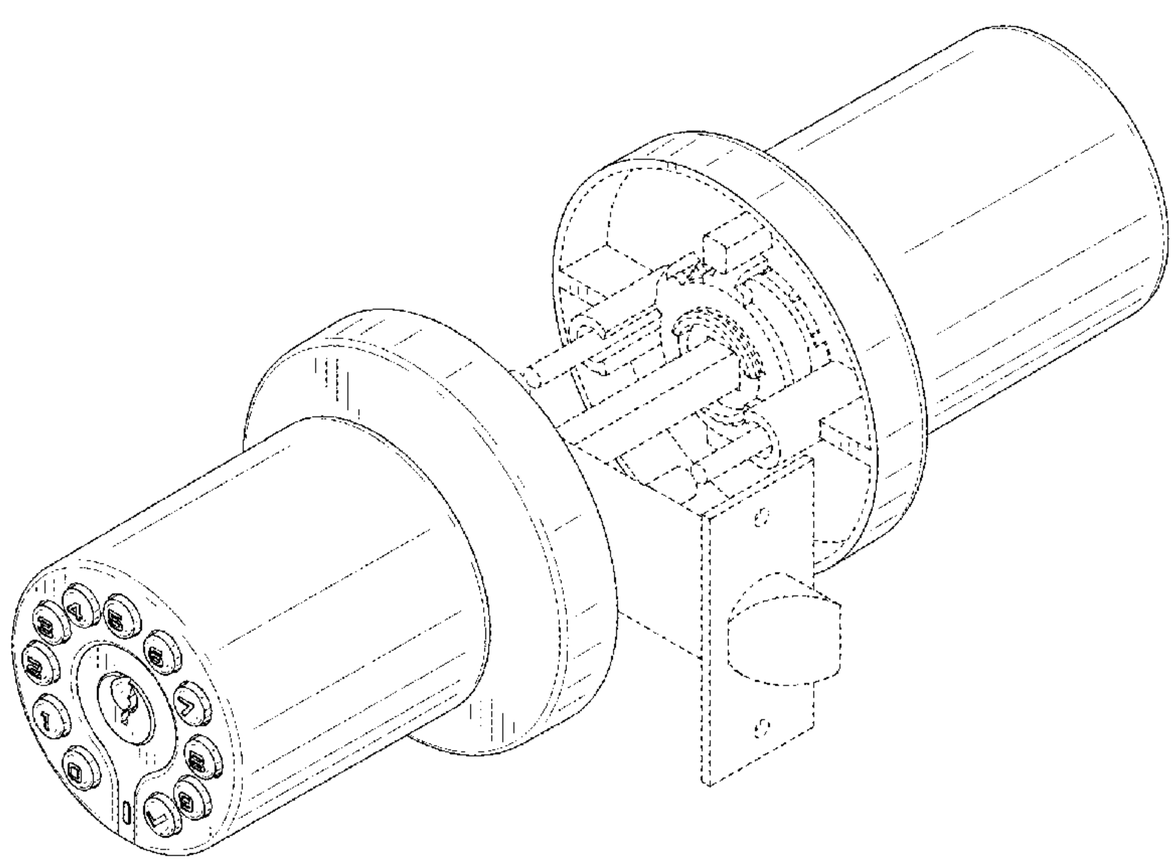

(56) **References Cited**

U.S. PATENT DOCUMENTS

| | | | | |
|---|---|---|---|---|
| 2020/0191259 | A1* | 6/2020 | Bagley | G05G 5/05 |
| 2021/0388638 | A1* | 12/2021 | Snodgrass | E05B 47/068 |

OTHER PUBLICATIONS

Lulock Code Dorr Lock, by lulock on amazon.com. Dated Jul. 25, 2021. Found online [Jul. 22, 2022]. https://www.amazon.com/Electronic-Waterproof-Passage-Function-Warehouse/dp/B09B5DS765.*

* cited by examiner

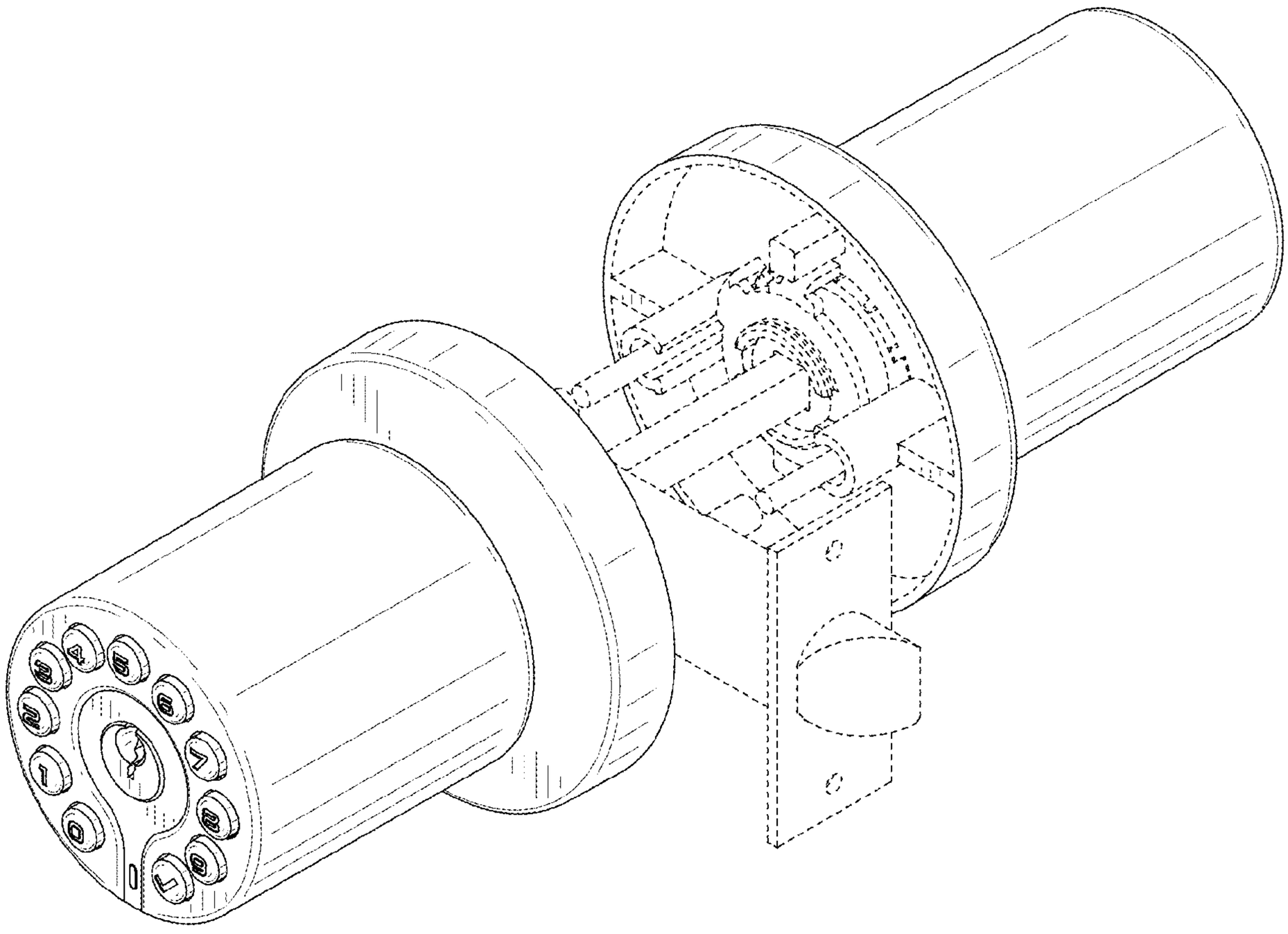

FIG. 1

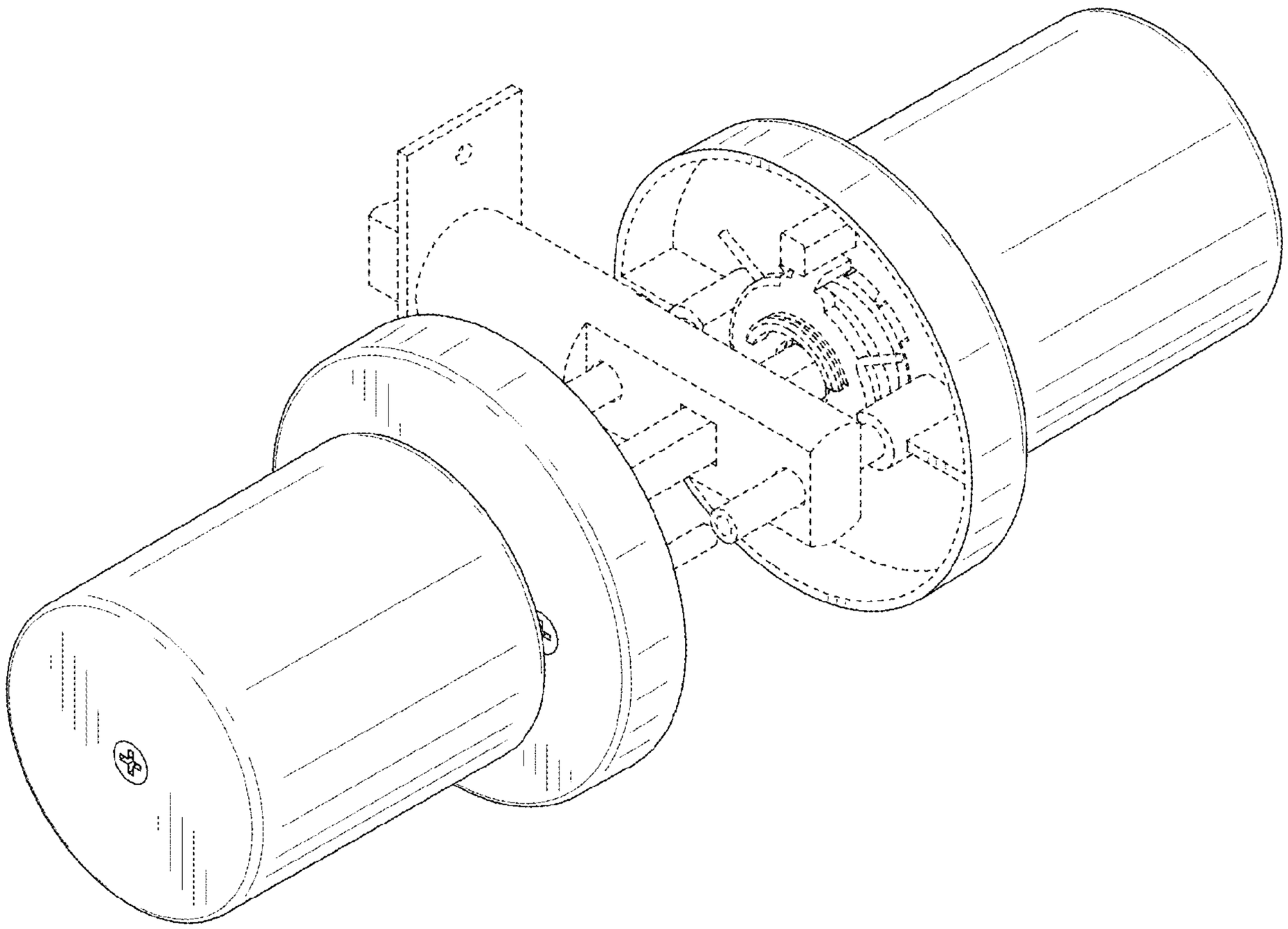

FIG. 2

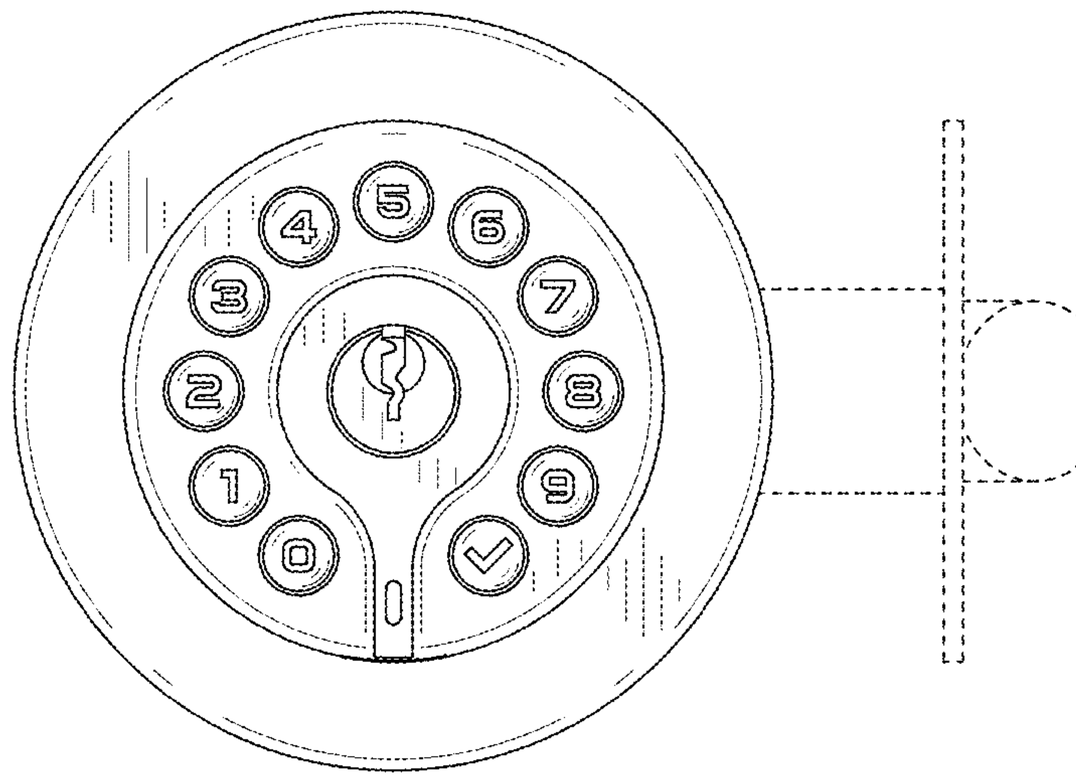


FIG. 3

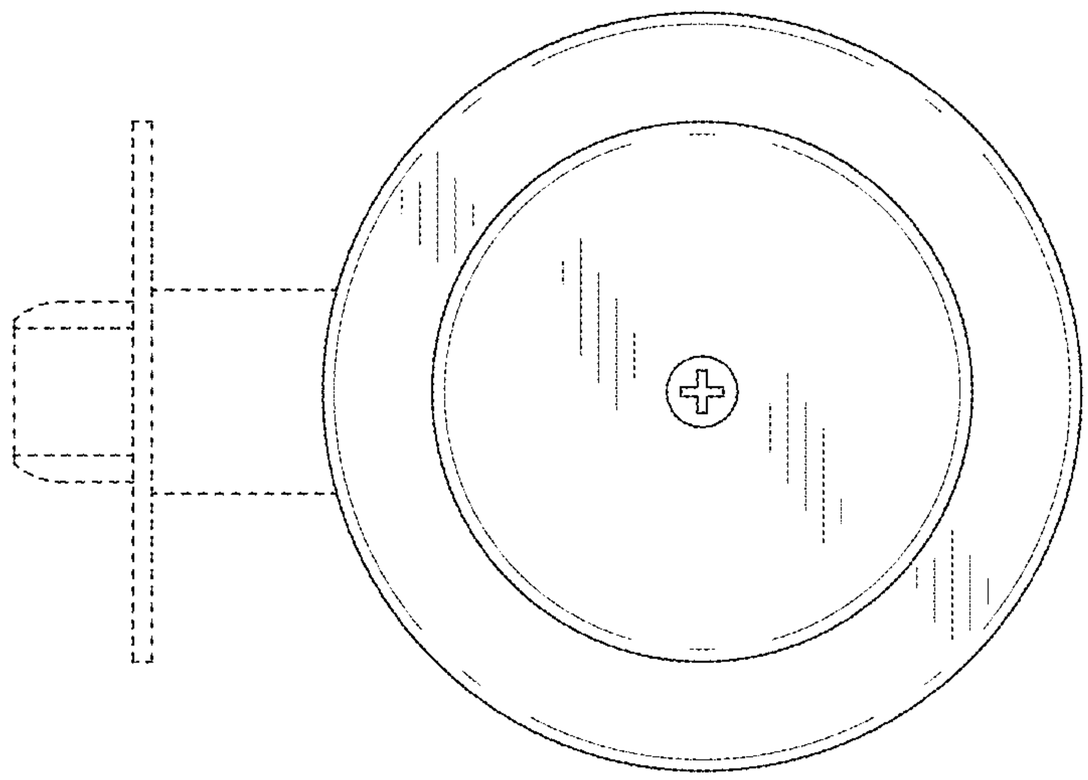

FIG. 4

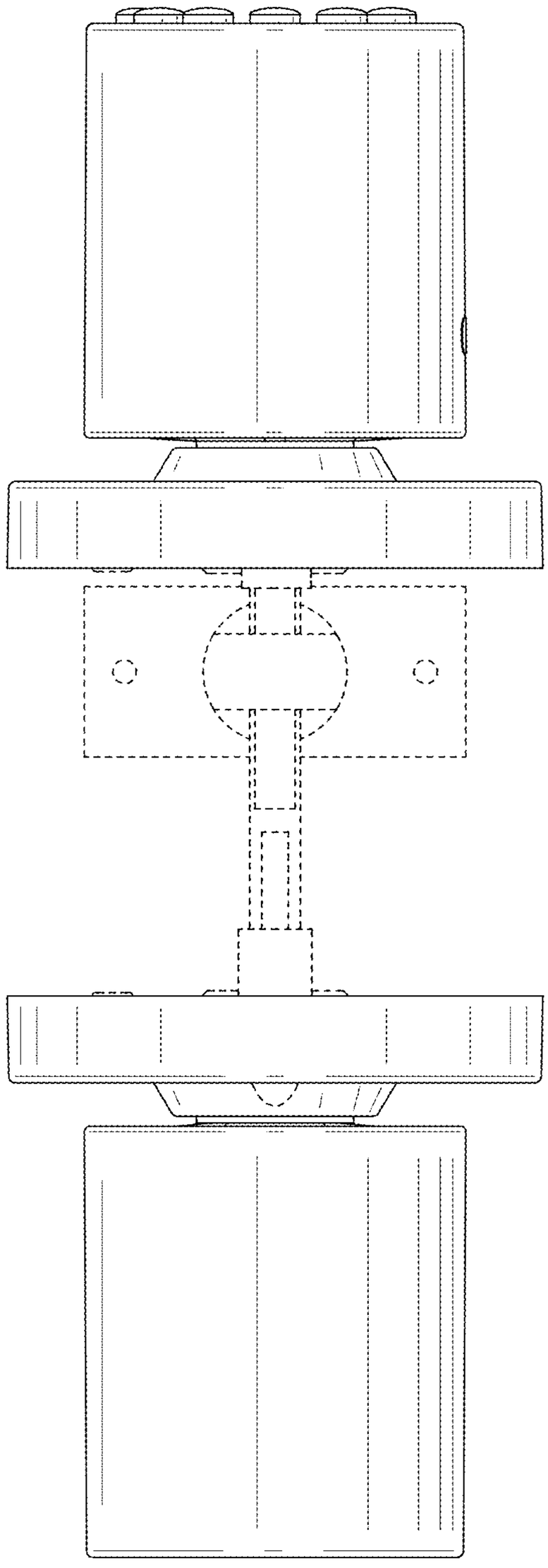

FIG. 5

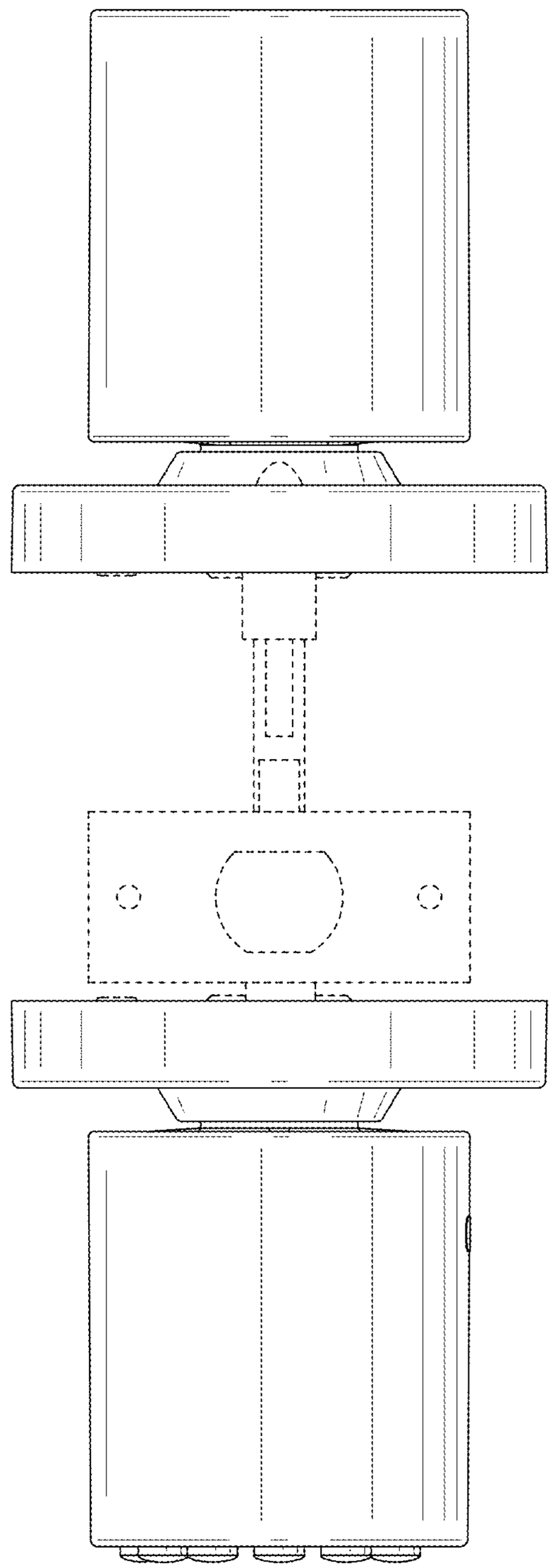

FIG. 6

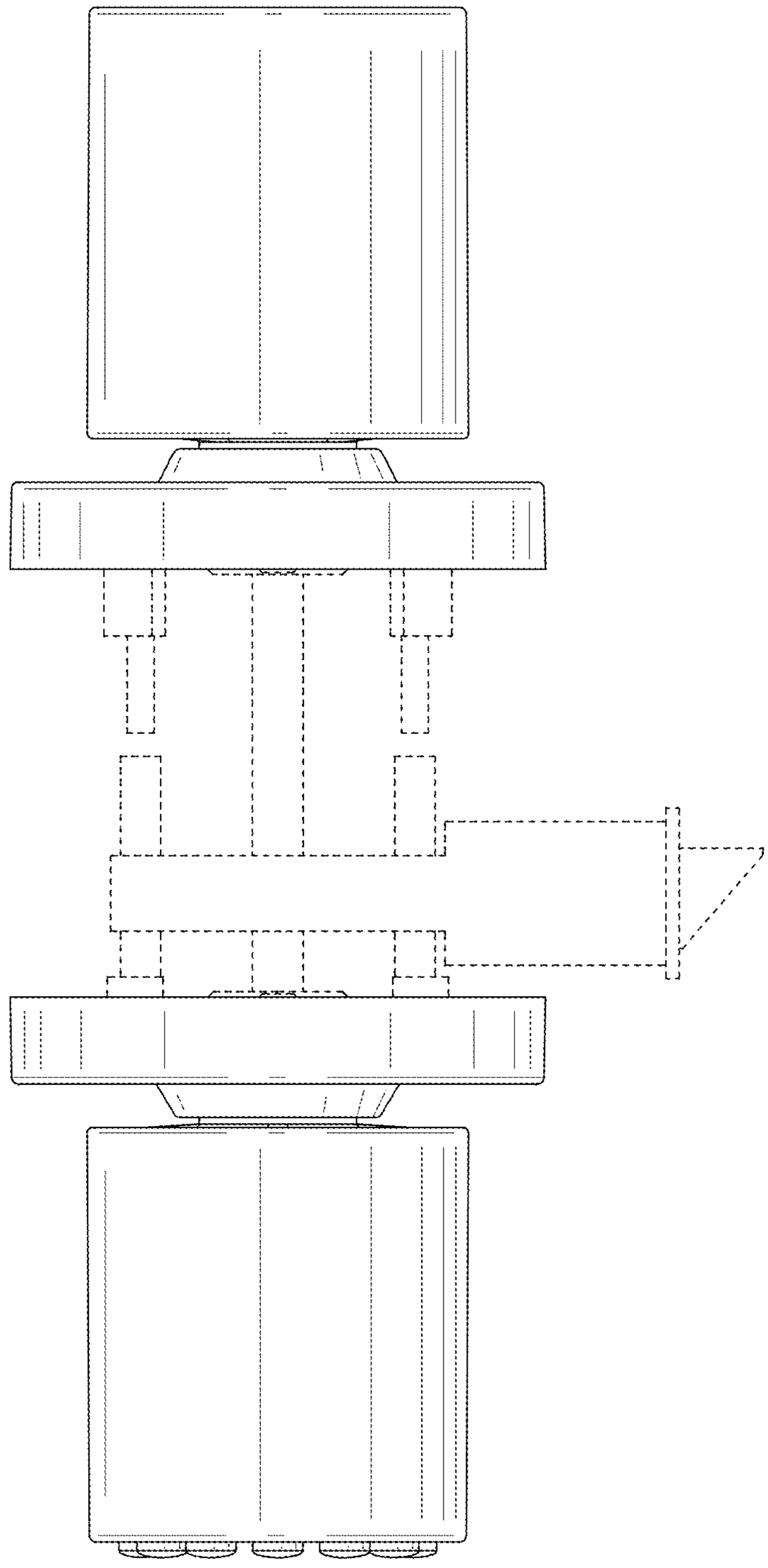

FIG. 7

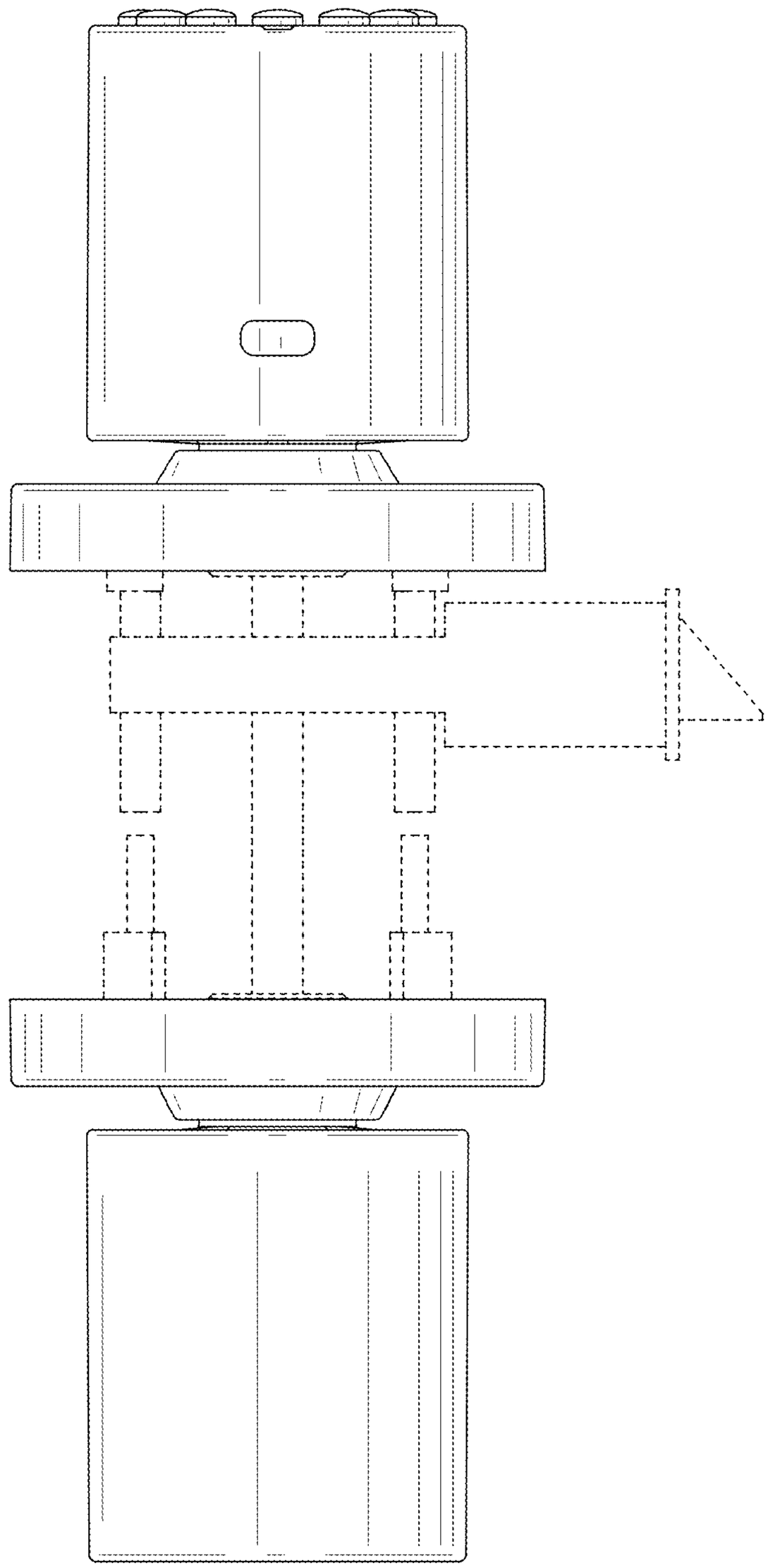

FIG. 8