US00D979797S

(12) United States Design Patent

Ridley

(10) Patent No.: US D979,797 S
(45) Date of Patent: ** Feb. 28, 2023

(54) **BUILDING MODULE**

(71) Applicant: **Bill Ridley**, Oklahoma City, OK (US)

(72) Inventor: **Bill Ridley**, Oklahoma City, OK (US)

(**) Term: **15 Years**

(21) Appl. No.: **29/713,434**

(22) Filed: **Nov. 15, 2019**

(51) **LOC (14) Cl.** **25-04**

(52) **U.S. Cl.**
USPC **D25/69**

(58) **Field of Classification Search**
USPC D25/62, 63, 68, 69; 52/187, 832, 183, 52/189, 741.2; 119/847
CPC E04F 11/035; E04F 11/022; E04F 11/09; E04F 11/1812; E04F 11/1817; E04F 2011/007; E04F 11/032; E04F 11/038; E04B 1/2403
See application file for complete search history.

(56) **References Cited**

U.S. PATENT DOCUMENTS

6,155,007 A * 12/2000 Murase E04F 11/032 52/182
D463,039 S * 9/2002 Tseng D25/69
6,523,310 B1 * 2/2003 Tseng E04F 11/032 52/182
8,534,234 B2 * 9/2013 Moore, III A01K 1/035 119/847
2008/0236066 A1 * 10/2008 Arnold E04F 11/032 52/187

* cited by examiner

Primary Examiner — Gino Colan
(74) *Attorney, Agent, or Firm* — Dunlap Codding, P.C.

(57) **CLAIM**

The ornamental design for a building module, as shown and described.

DESCRIPTION

FIG. **1** is a perspective view of a building module showing my new design.
FIG. **2** is a front elevational view thereof.
FIG. **3** is a rear elevational view thereof.
FIG. **4** is a right side elevational view thereof.
FIG. **5** is a left side elevational view thereof.
FIG. **6** is a top plan view thereof.
FIG. **7** is a bottom plan view thereof; and,
FIG. **8** is a perspective view of the building module shown incorporated into a building structure.
The broken lines represent environment that forms no part of the claim.

1 Claim, 4 Drawing Sheets

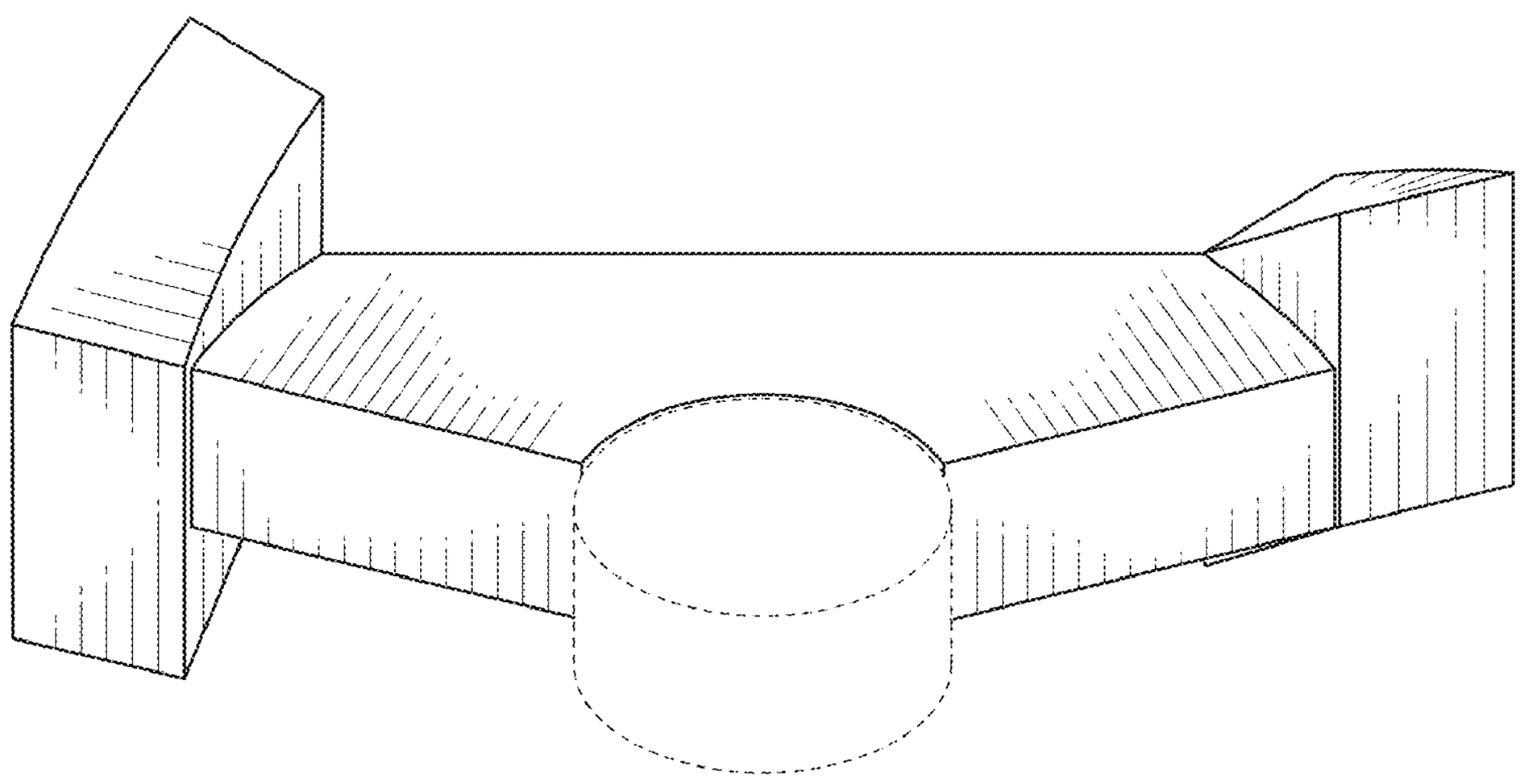

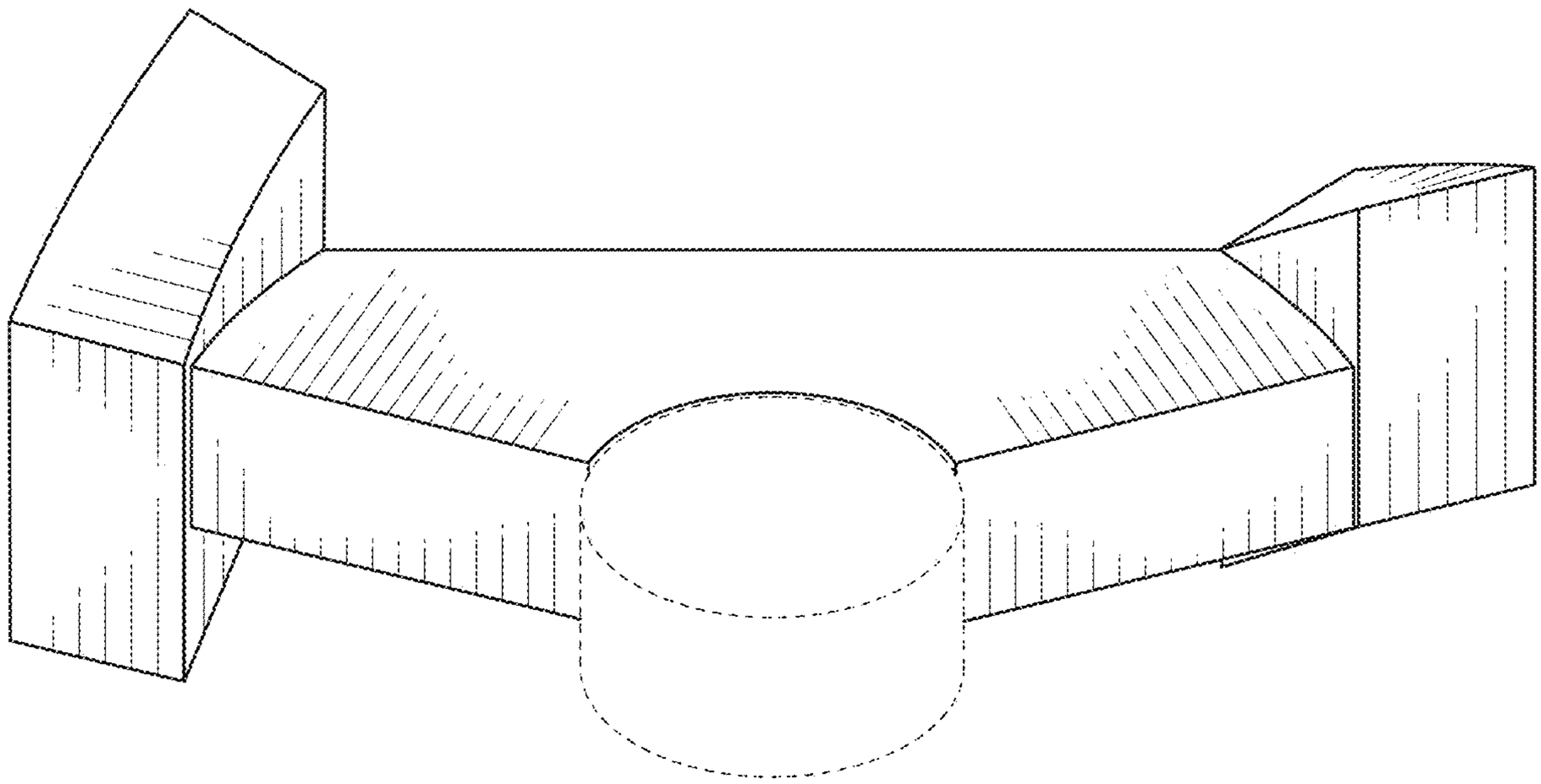

FIG. 1

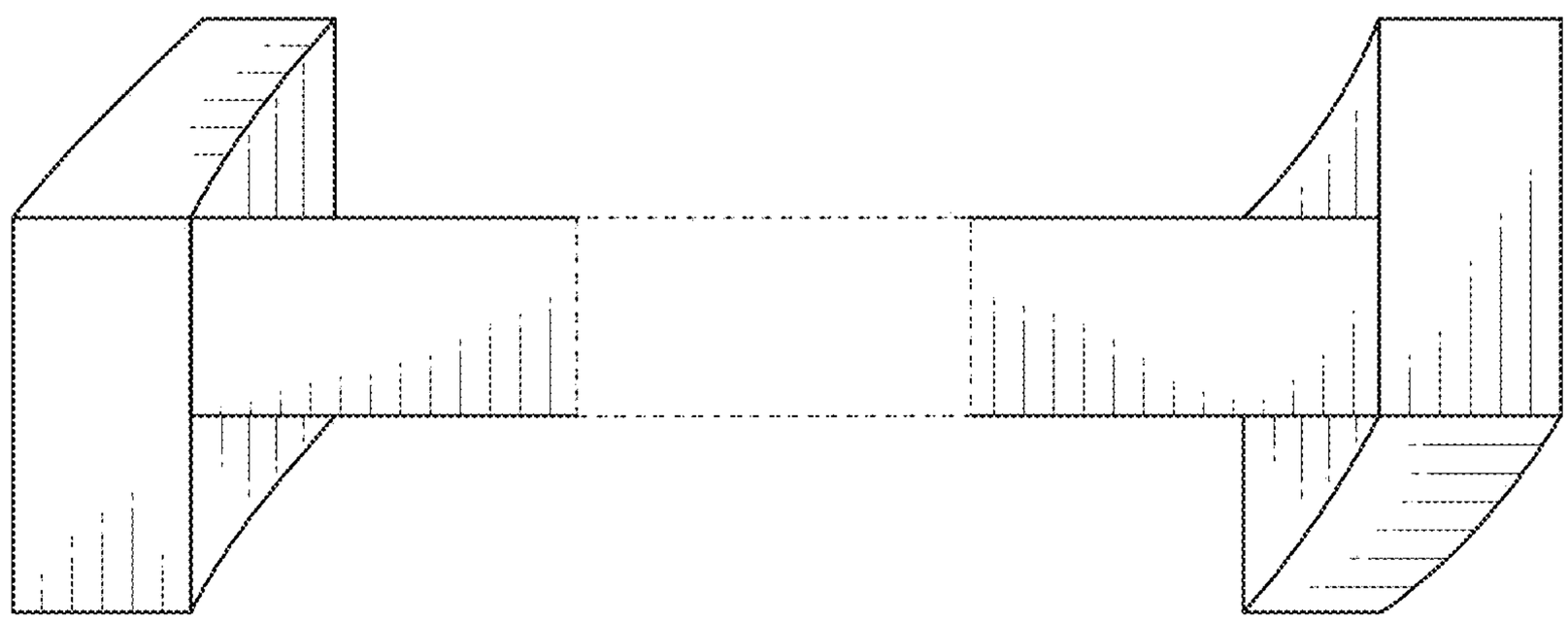

FIG. 2

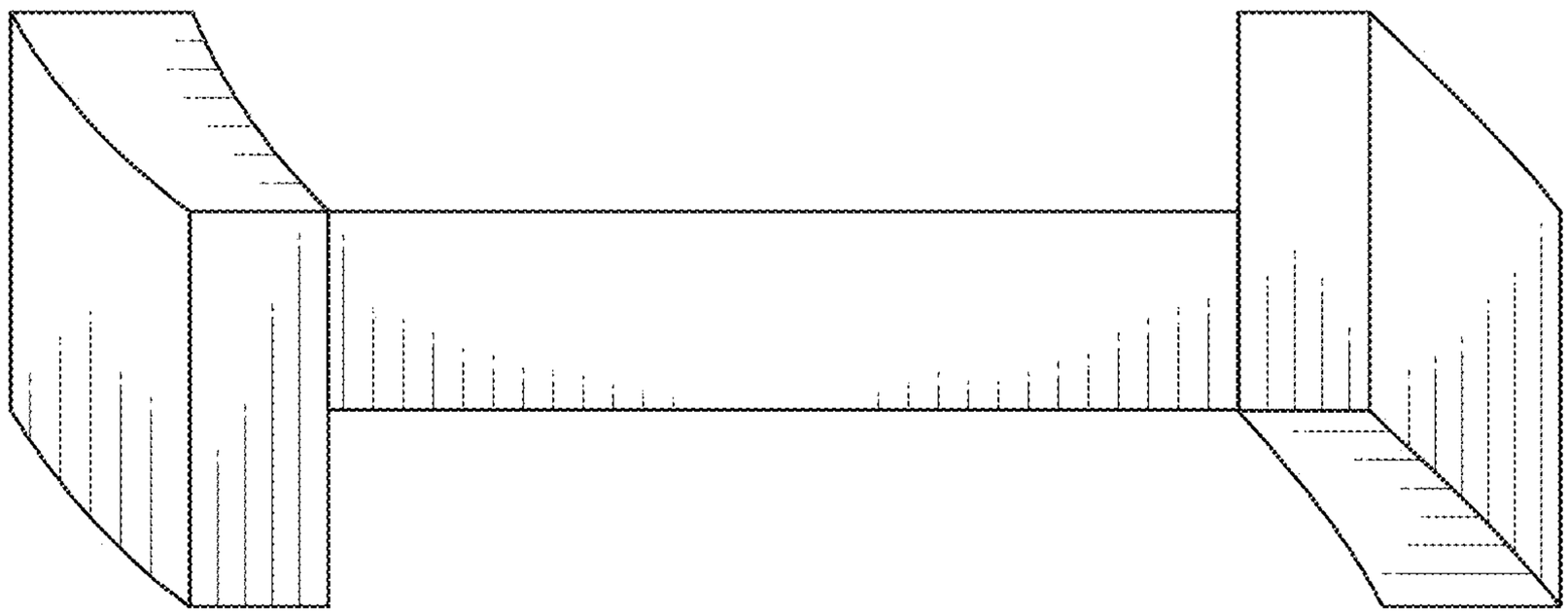

FIG. 3

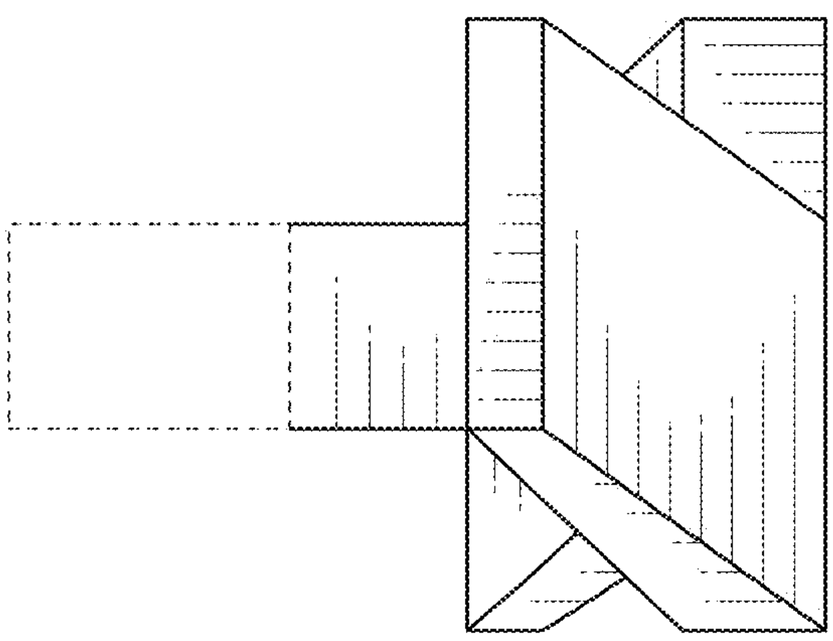

FIG. 4

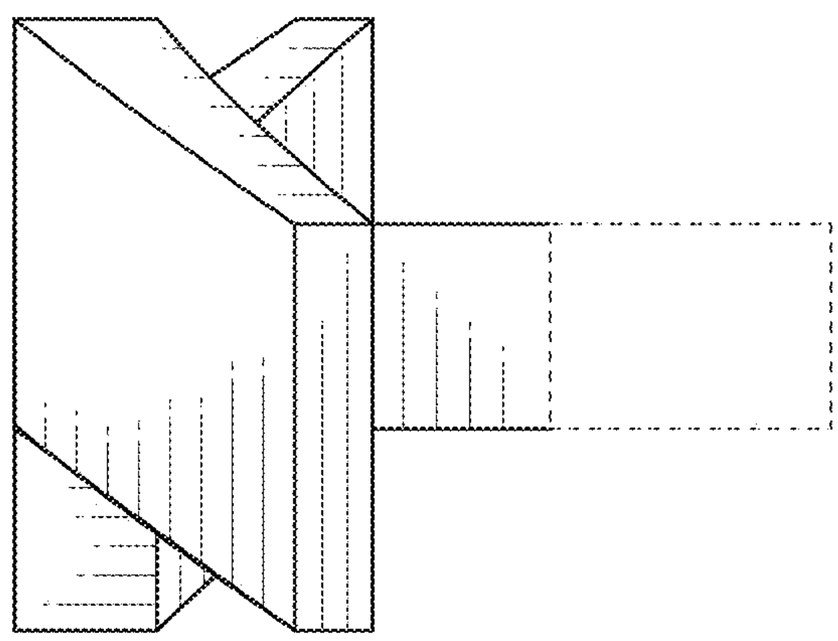

FIG. 5

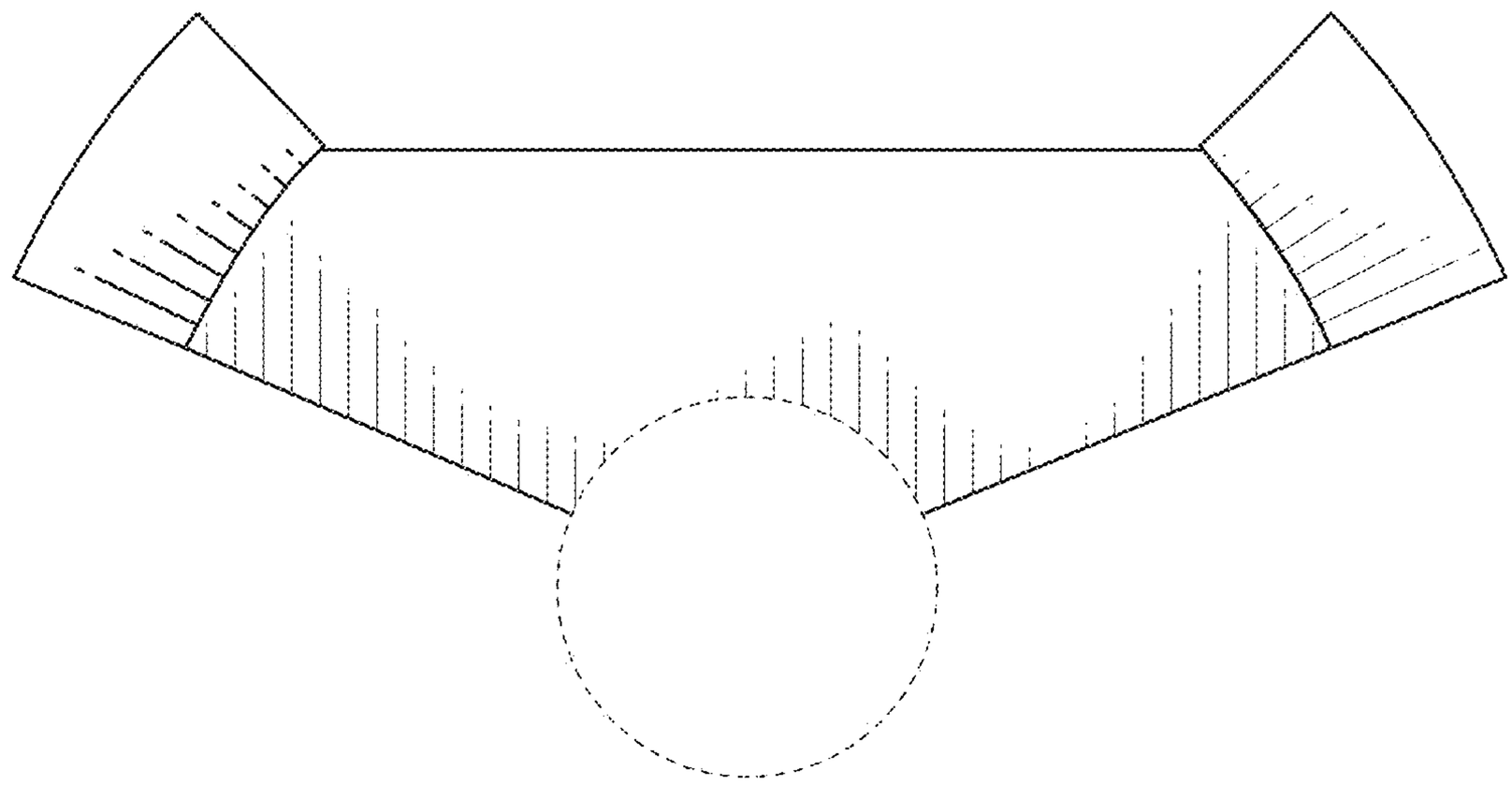

FIG. 6

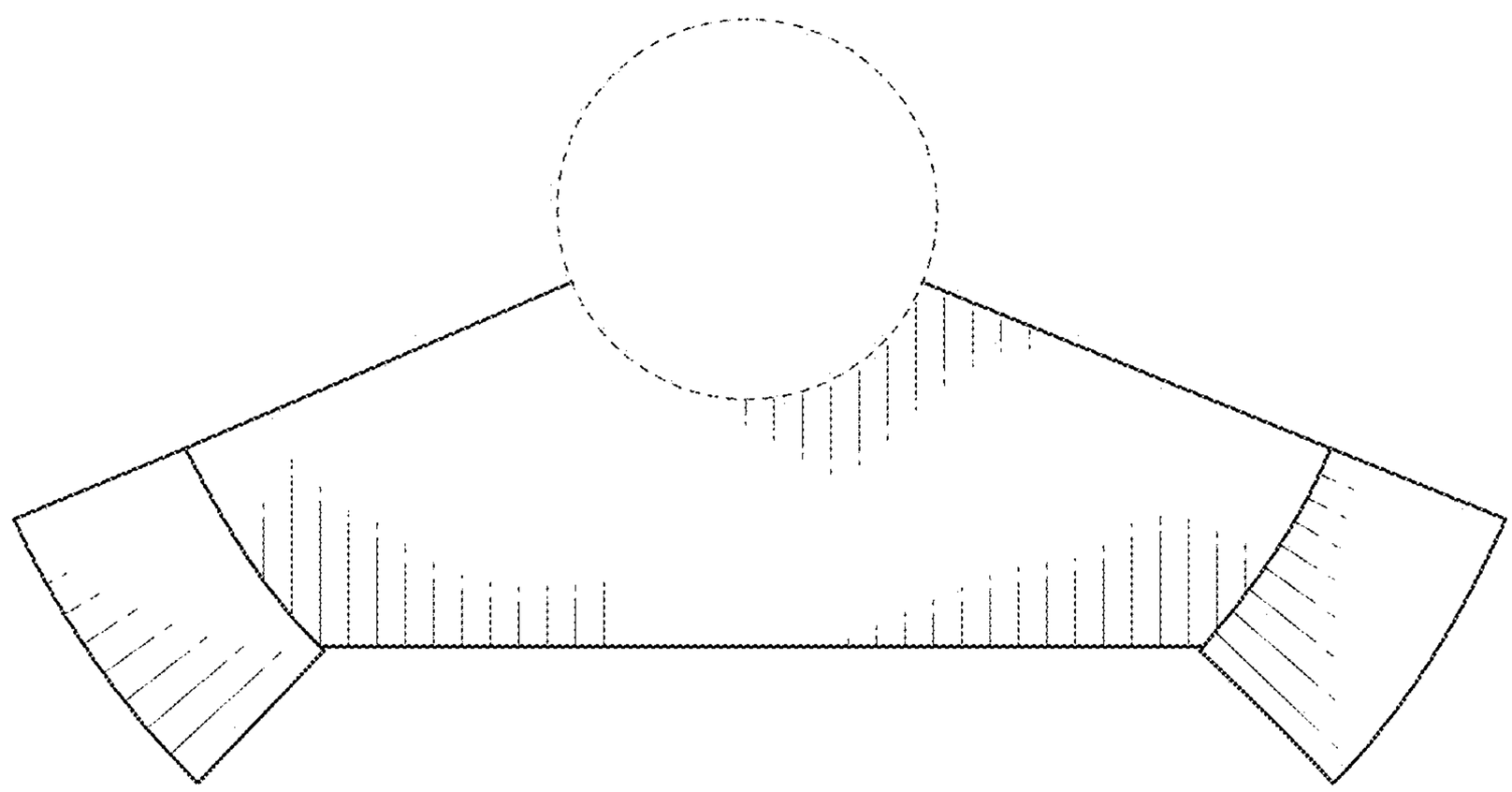

FIG. 7

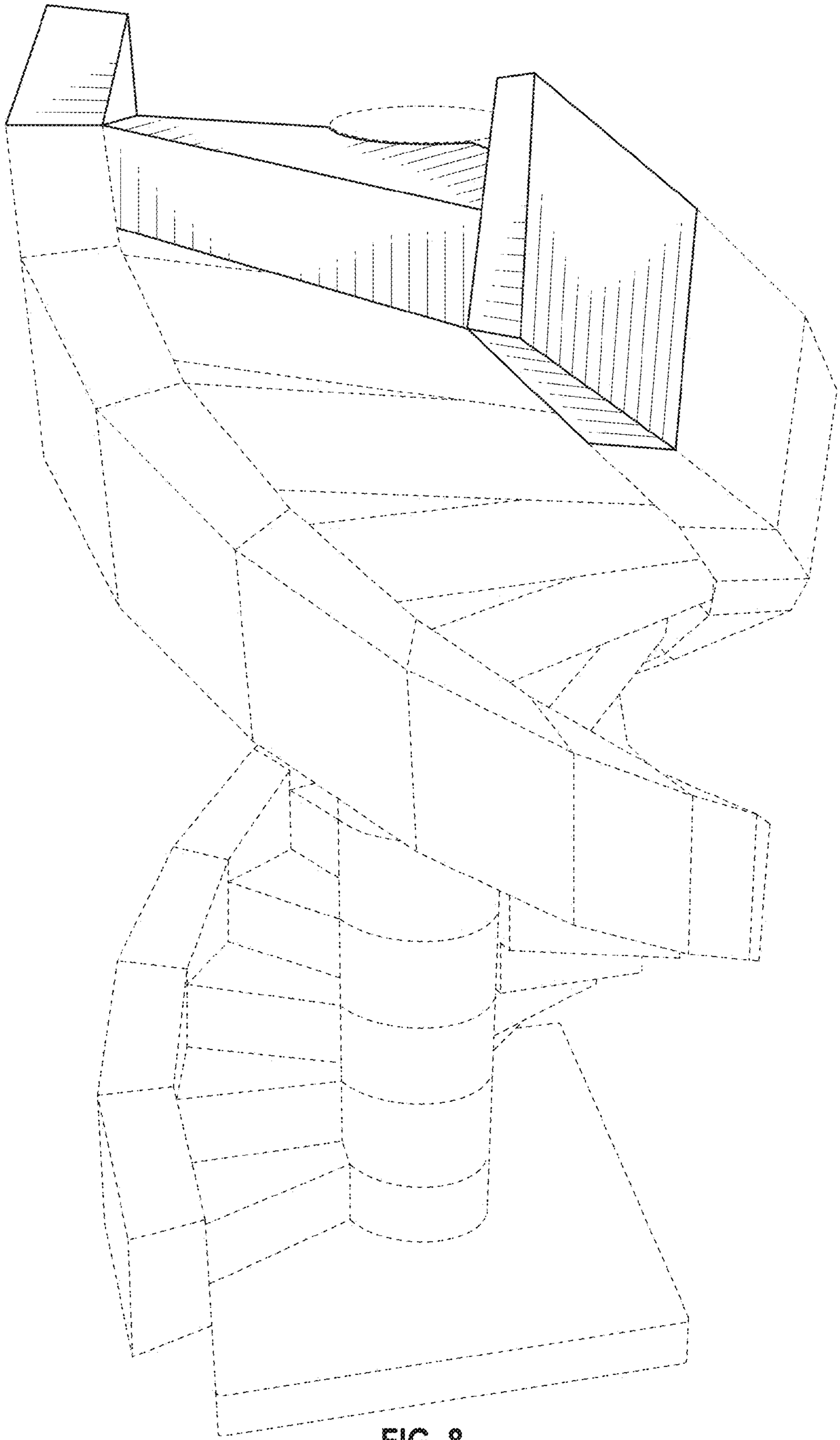

FIG. 8