US00D979784S

(12) United States Design Patent

Kulyk

(10) Patent No.: US D979,784 S
(45) Date of Patent: ** Feb. 28, 2023

(54) **AUTOMATIC SPANKING DEVICE**

(71) Applicant: **Stanislav Kulyk**, Lublin (PL)

(72) Inventor: **Stanislav Kulyk**, Lublin (PL)

(**) Term: **15 Years**

(21) Appl. No.: **29/754,684**

(22) Filed: **Oct. 13, 2020**

(51) **LOC (14) Cl.** **28-03**

(52) **U.S. Cl.**
USPC **D24/215**

(58) **Field of Classification Search**
USPC D24/215, 200, 211, 212, 213, 214, 133, D24/107, 231, 184, 141; D8/360; D15/10, 66, 122, 147, 141, 199
CPC A61H 19/00; A61H 19/30; A61H 19/32; A61H 19/34; A61H 19/40; A61H 19/44; A61H 19/50; A61H 21/00; A61H 23/00; A61H 7/00; A61H 7/003; A61H 7/004; A61H 9/00; A61H 2205/087; A61H 2205/086
See application file for complete search history.

(56) **References Cited**

U.S. PATENT DOCUMENTS

3,552,388 A * 1/1971 Zelenka A61M 21/00 601/112
4,807,603 A * 2/1989 Yasui A61H 15/00 601/121
D479,326 S * 9/2003 Pollock D24/108
(Continued)

OTHER PUBLICATIONS

Auto-spanker. Date: Aug. 30, 2019. [online]. [Site visited Jun. 29, 2022]. Available from Internet URL: twitter.com/realrubbermatt/status/1167363979527827456 (Year: 2019).*
(Continued)

Primary Examiner — Susan Bennett Hattan
Assistant Examiner — Landon Thomas Cassell

(57) **CLAIM**

The ornamental design for an automatic spanking device, as shown and described.

DESCRIPTION

FIG. **1** is a top-front-right perspective view of an automatic spanking device showing my new design;
FIG. **2** is a bottom-rear-left perspective view thereof;
FIG. **3** is a front elevated view thereof;
FIG. **4** is a rear elevated view thereof;
FIG. **5** is a top plan view thereof;
FIG. **6** is a bottom plan view thereof;
FIG. **7** is a left elevated view thereof;
FIG. **8** is a right elevated view thereof;
FIG. **9** is a top-front-right perspective view thereof, showing the automatic spanking device with a mounting clamp;
FIG. **10** is a bottom-rear-left perspective view thereof, showing the automatic spanking device with the mounting clamp;
FIG. **11** is a reduced top perspective view thereof, showing the automatic spanking device in an operational configuration; and,
FIG. **12** is a reduced top perspective view thereof; showing the automatic spanking device in the operational configuration.
The broken lines showing of a user interface in FIGS. **1**, **5**, **7-9**, and **11-12**, the broken lines showing of a flexible arm end in FIGS. **1-4**, and **6-9**, the broken lines showing of paddles in FIG. **1-12**, the broken lines showing of a clamp in FIG. **9-10**, the broken lines showing of users in FIG. **11-12**, the broken lines showing directional arrows in FIGS. **11** and **12**, and the broken lines showing vibrational lines in FIGS. **11** and **12** are included for the purpose of showing environmental structure and form no part of the claimed design.

1 Claim, 12 Drawing Sheets

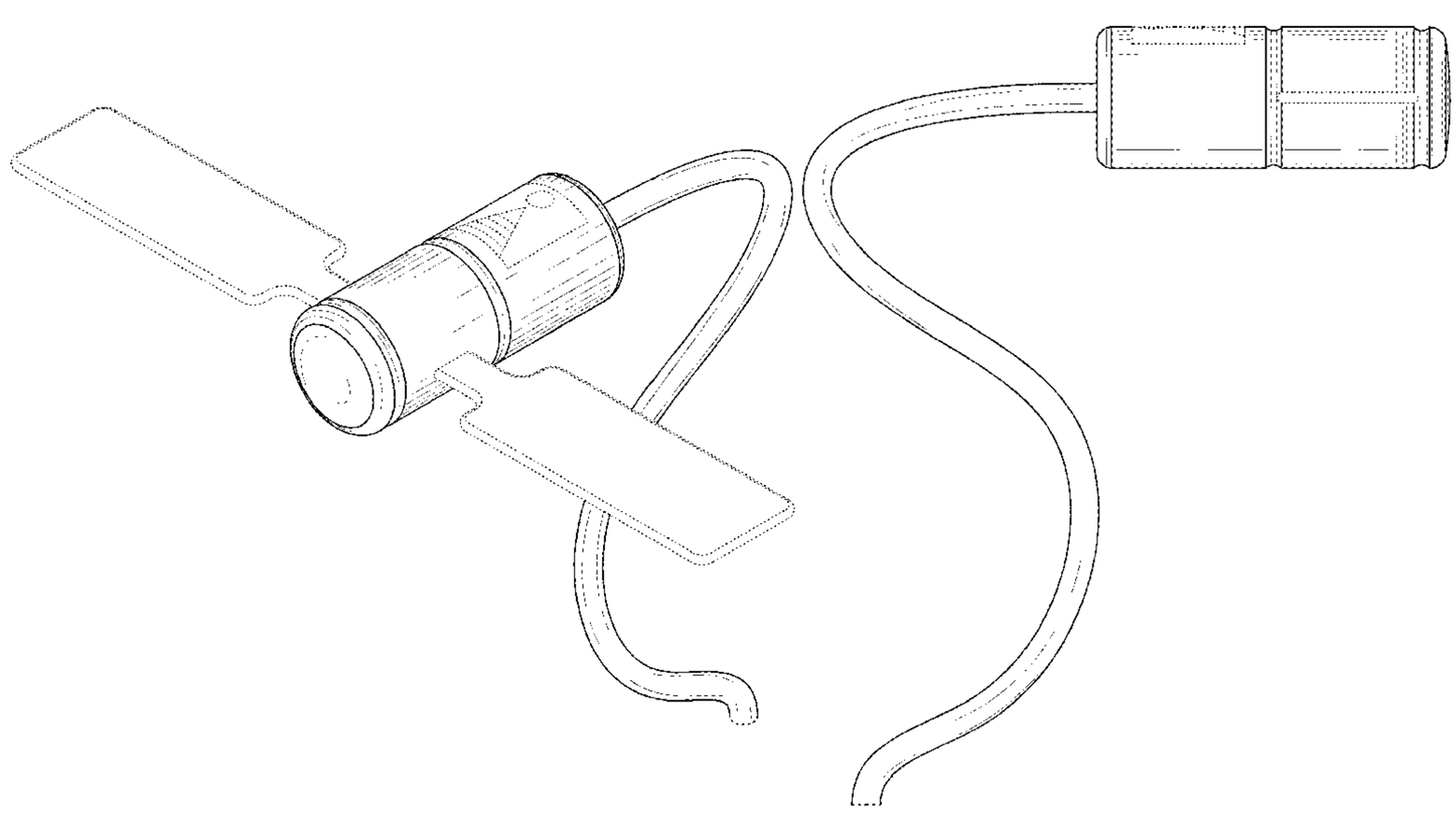

(56) **References Cited**

U.S. PATENT DOCUMENTS

D563,557	S	*	3/2008	Fink	D24/211
D567,952	S	*	4/2008	Fink	D24/200
D567,953	S	*	4/2008	Fink	D24/200
D567,954	S	*	4/2008	Fink	D24/200
D567,955	S	*	4/2008	Fink	D24/200
D639,442	S	*	6/2011	Chandler	A45D 44/22 D24/190
D700,709	S	*	3/2014	Khodabakhshian	D24/211
D732,687	S	*	6/2015	Johnson	D24/231
D884,804	S	*	5/2020	Ross	D24/211
D897,551	S	*	9/2020	Nasta	D24/211
D915,613	S	*	4/2021	Durfee	D24/211
2021/0113423	A1	*	4/2021	Kim	A63B 22/20

OTHER PUBLICATIONS

Spanker Machine—SPKM-MAK-3. Date: Feb. 25, 2017. [online]. [Site visited Jun. 29, 2022]. Available from Internet URL: https://vimeo.com/205710332?embedded=true&source=vimeo_logo&owner=21767124 (Year: 2017).*

Massage devices. (Design—© Questel) orbit.com. [Online PDF compilation of references] 6 pgs. Print Dates Range Jun. 20, 2003-Sep. 29, 2020 [Retrieved Jul. 6, 2022] https://www.orbit.com/export/UCZAH96B/pdf4/bf754c65-d222-4205-8745-8986ed9db46f-212631.pdf (Year: 2022).*

* cited by examiner

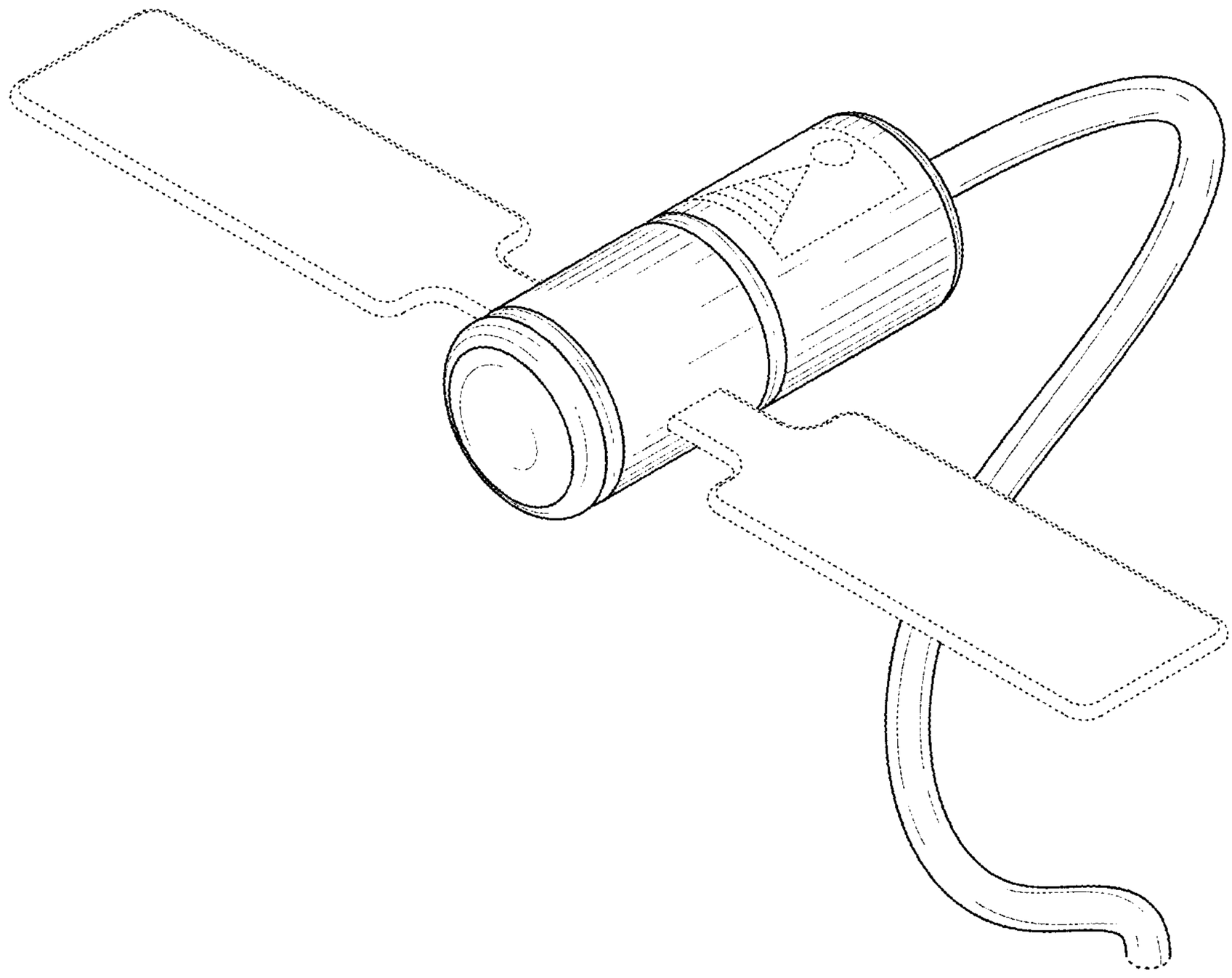

FIG. 1

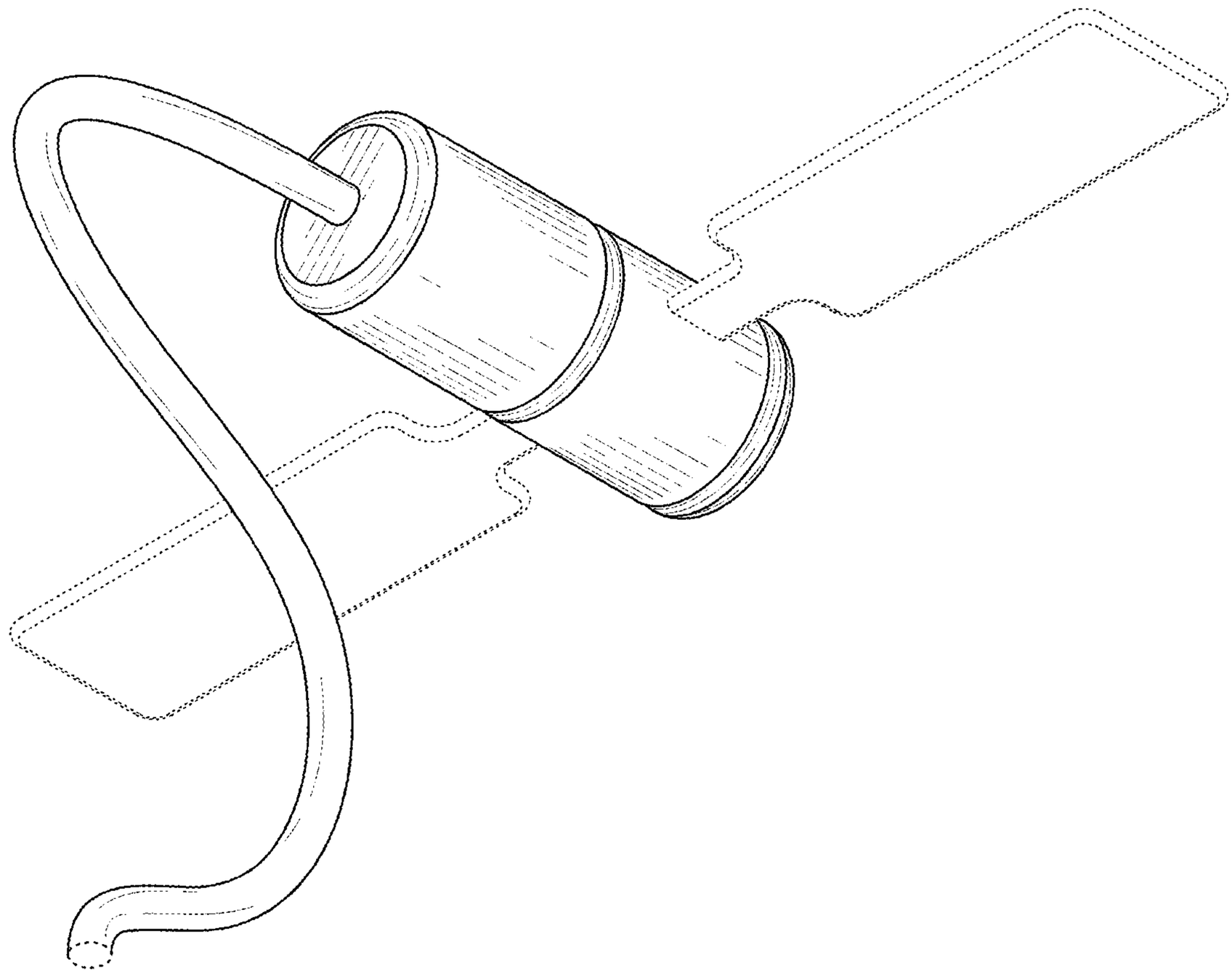

FIG. 2

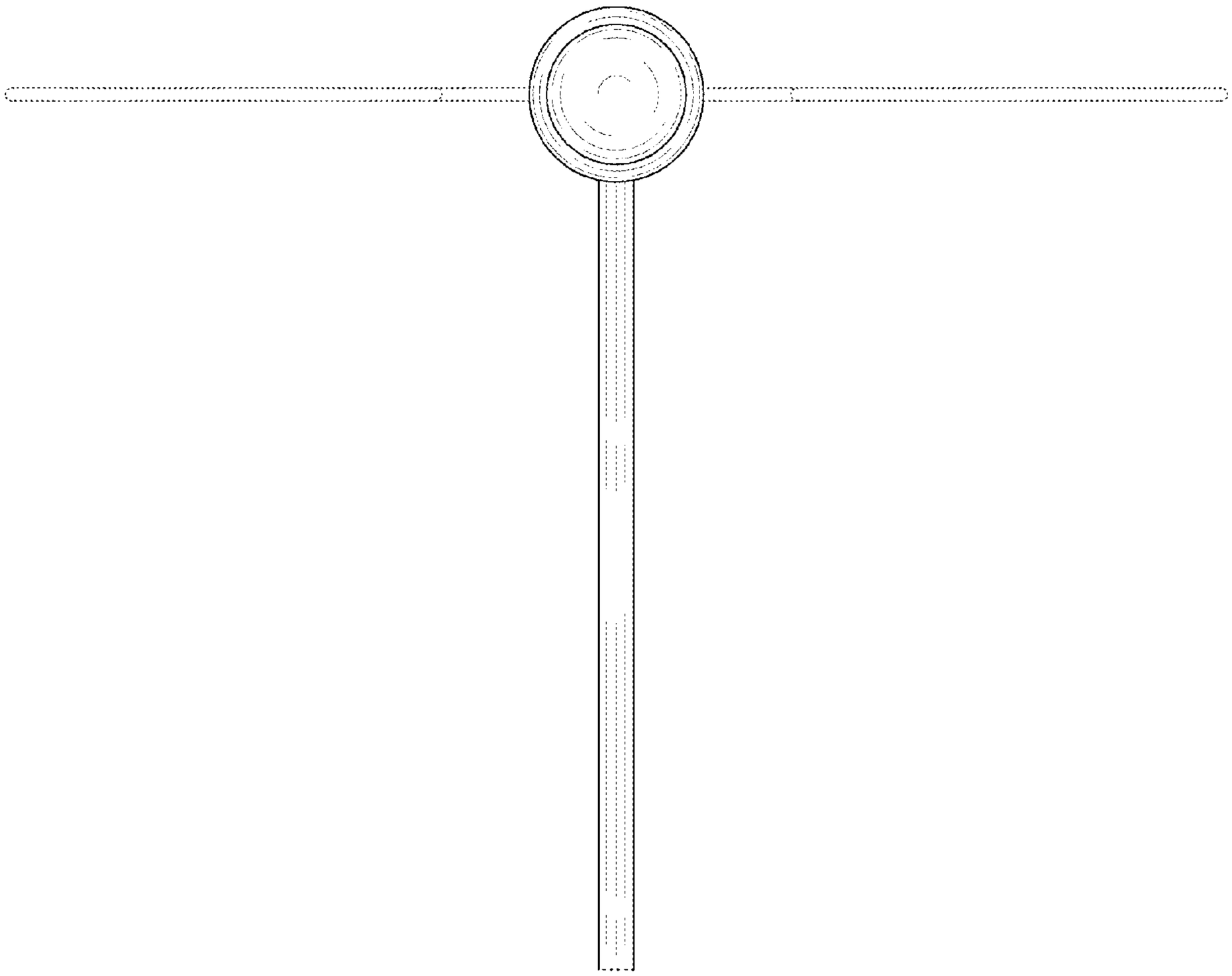

FIG. 3

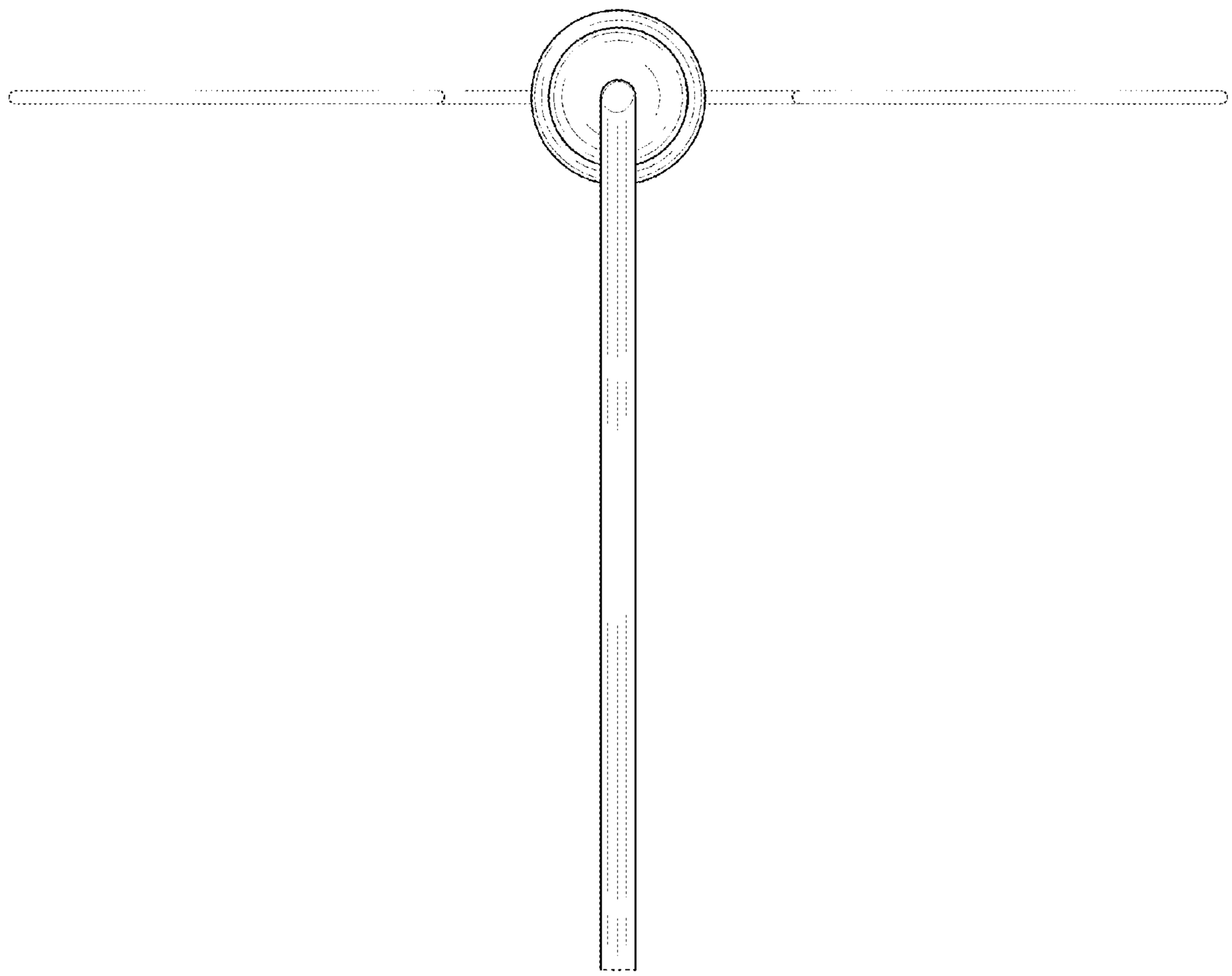

FIG. 4

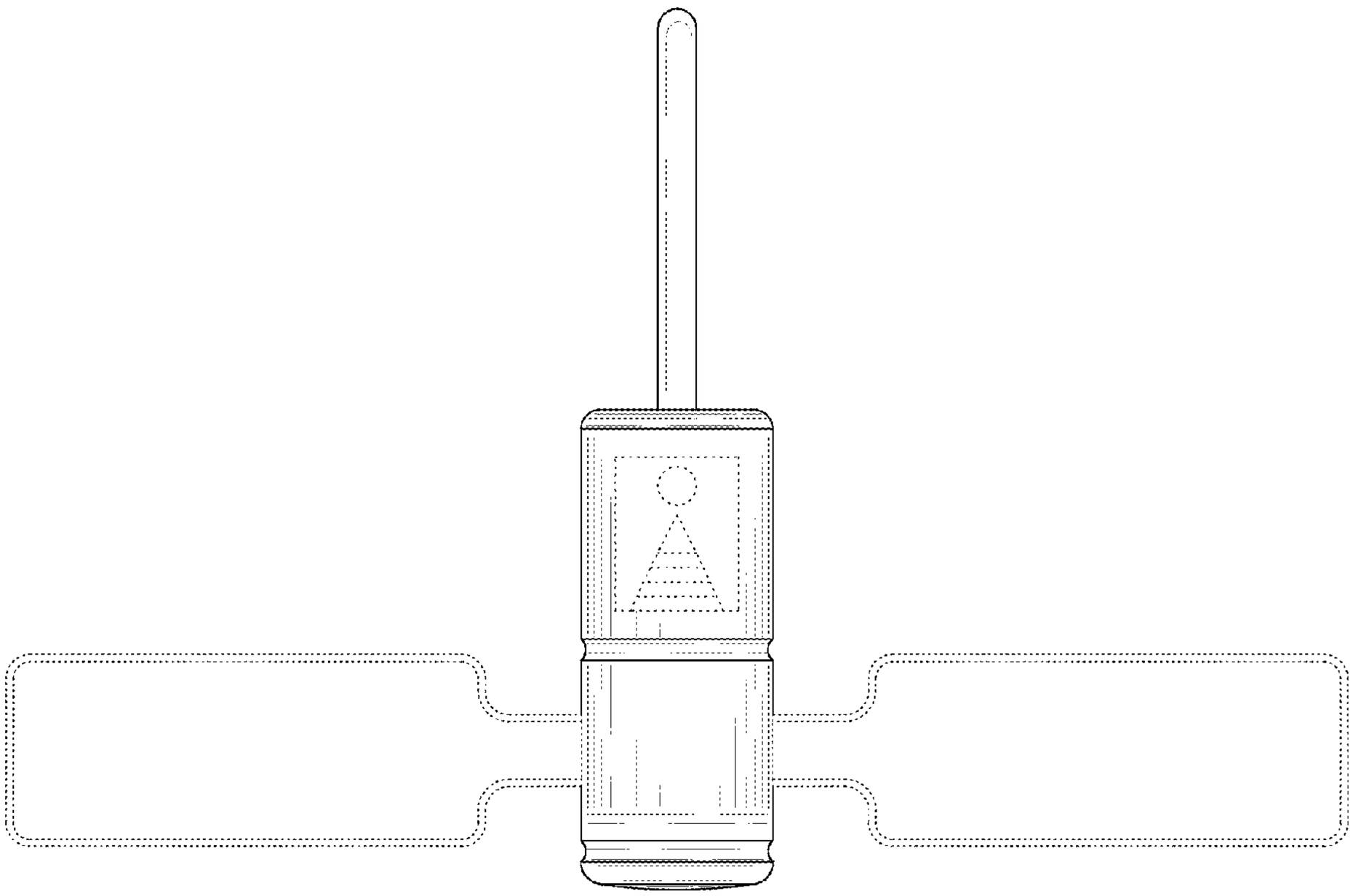

FIG. 5

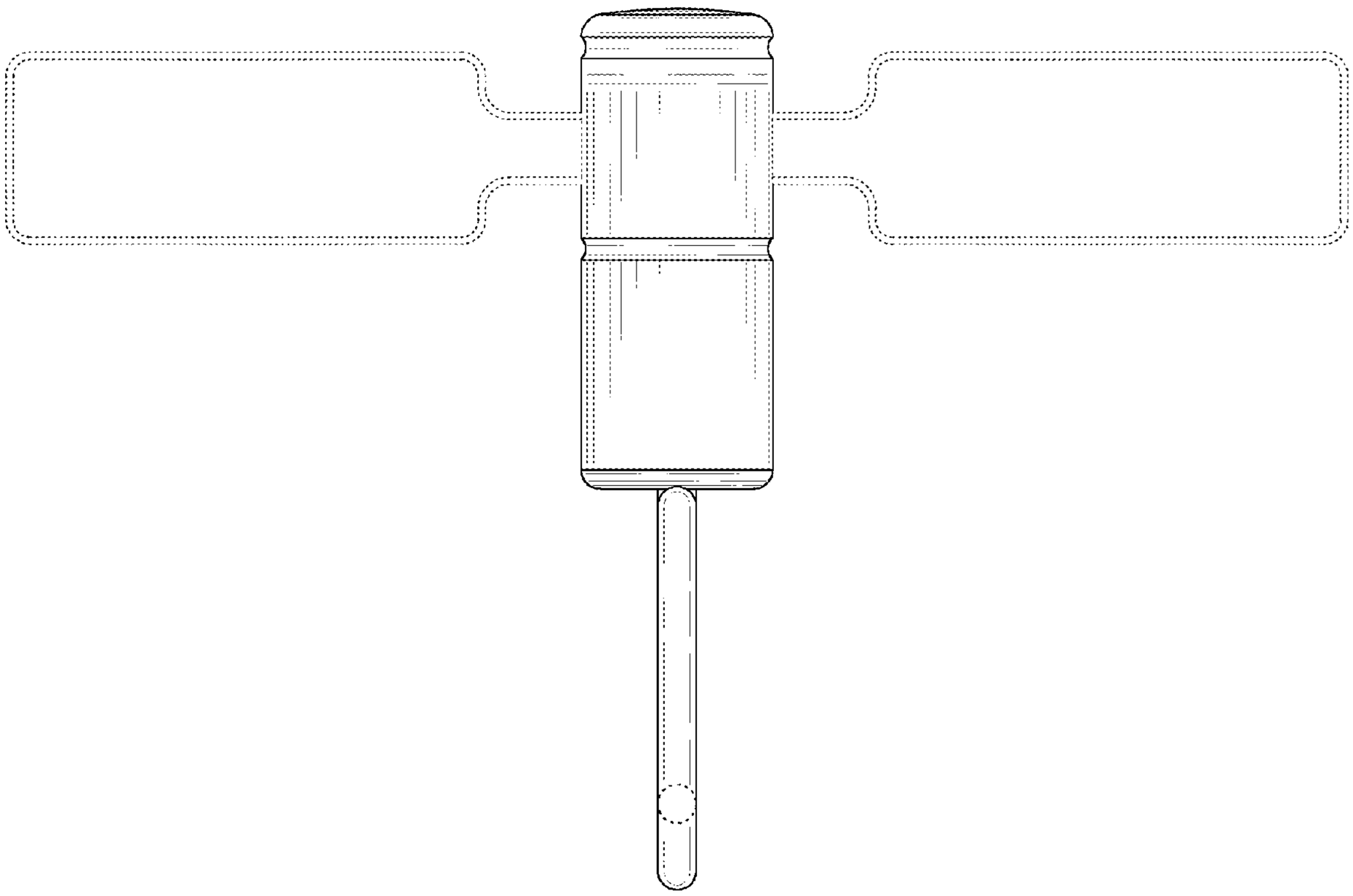

FIG. 6

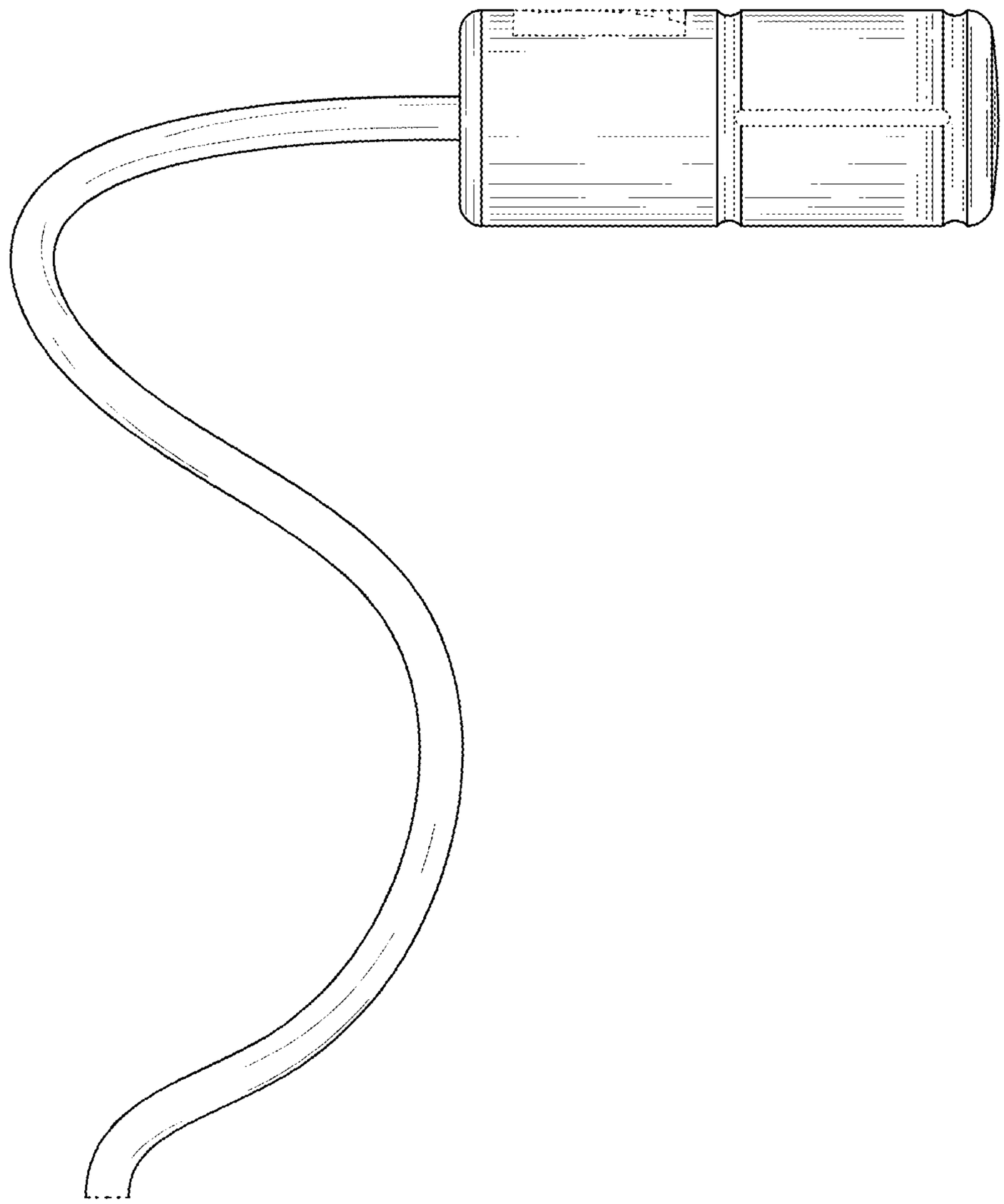

FIG. 7

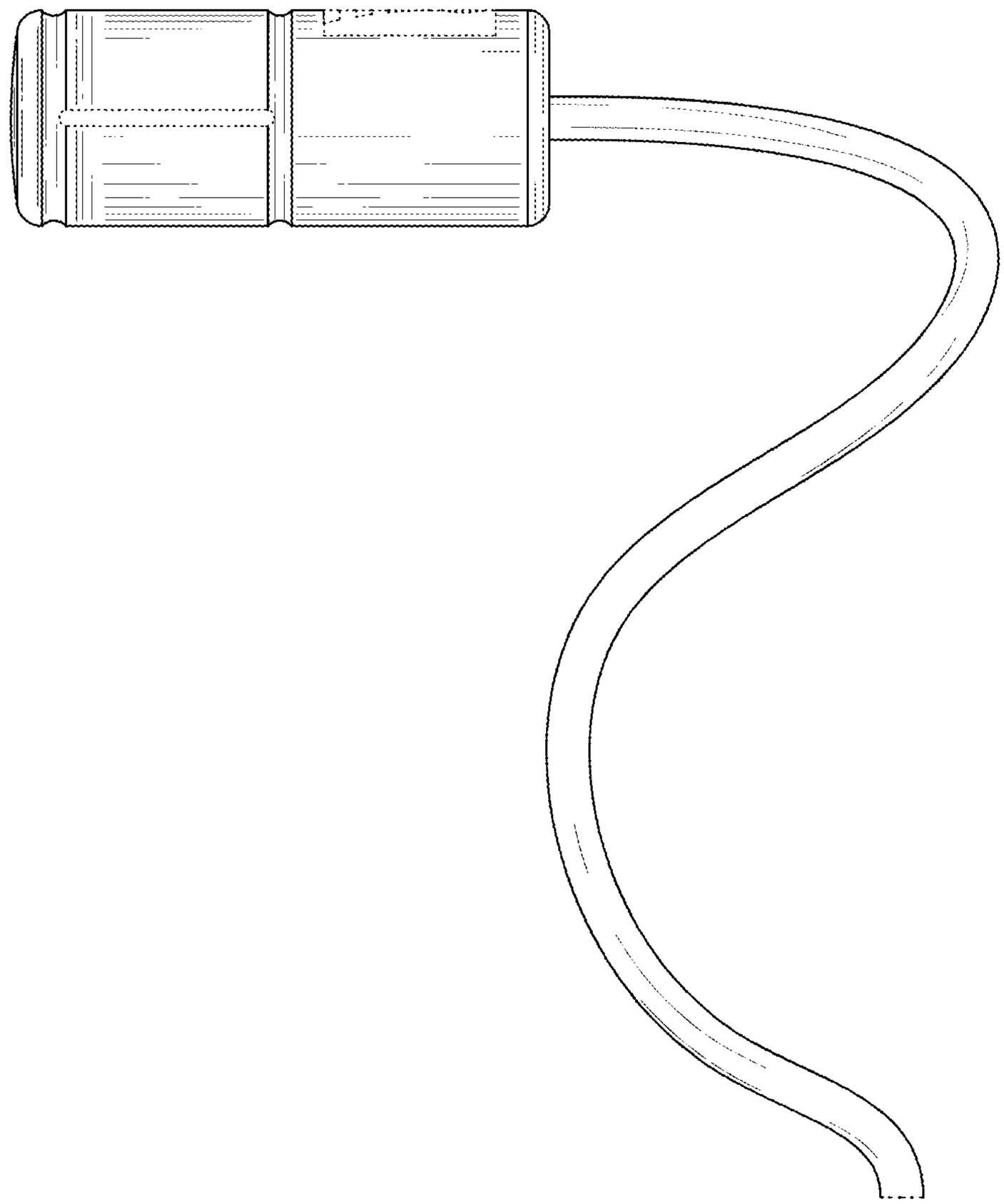

FIG. 8

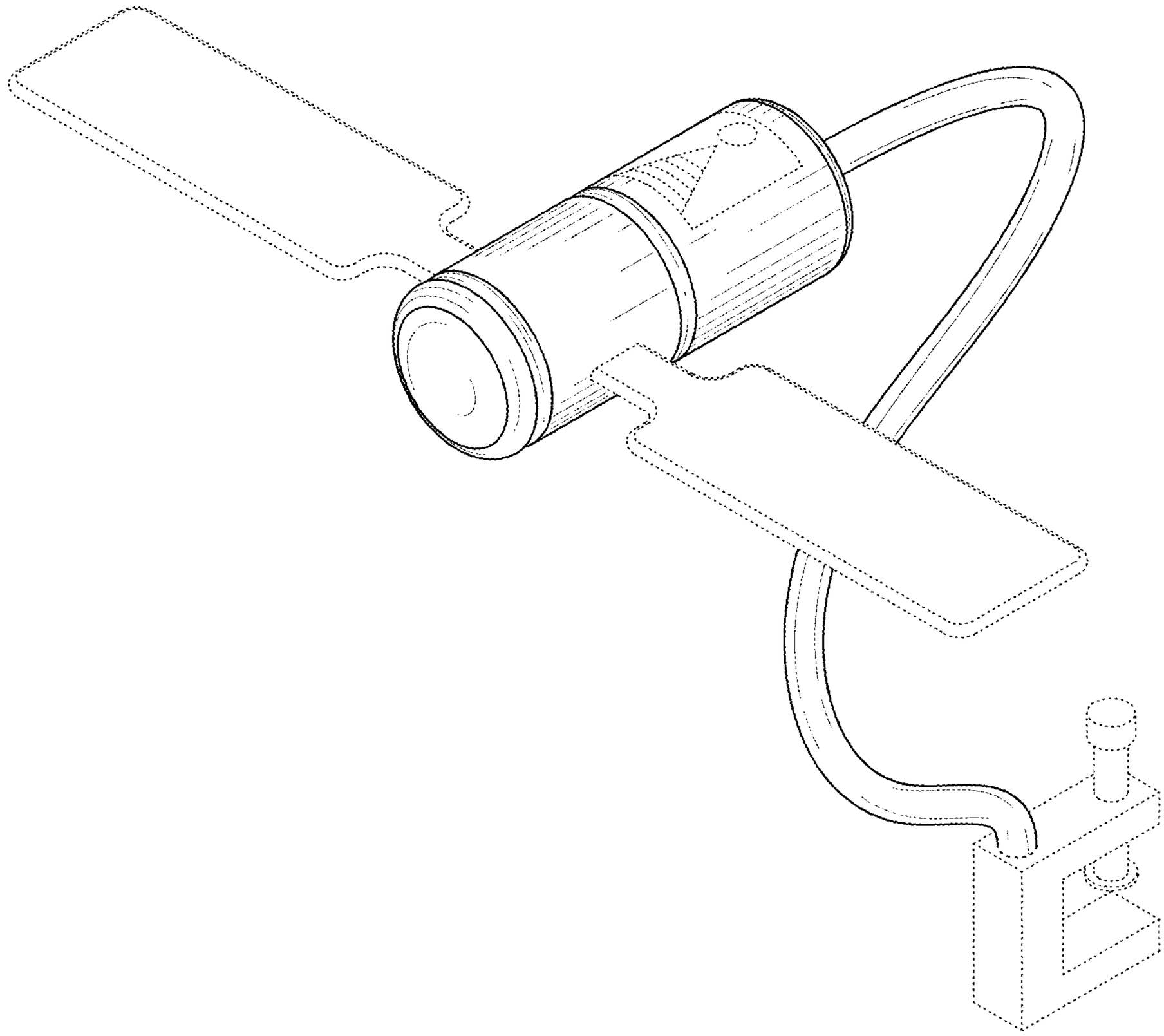

FIG. 9

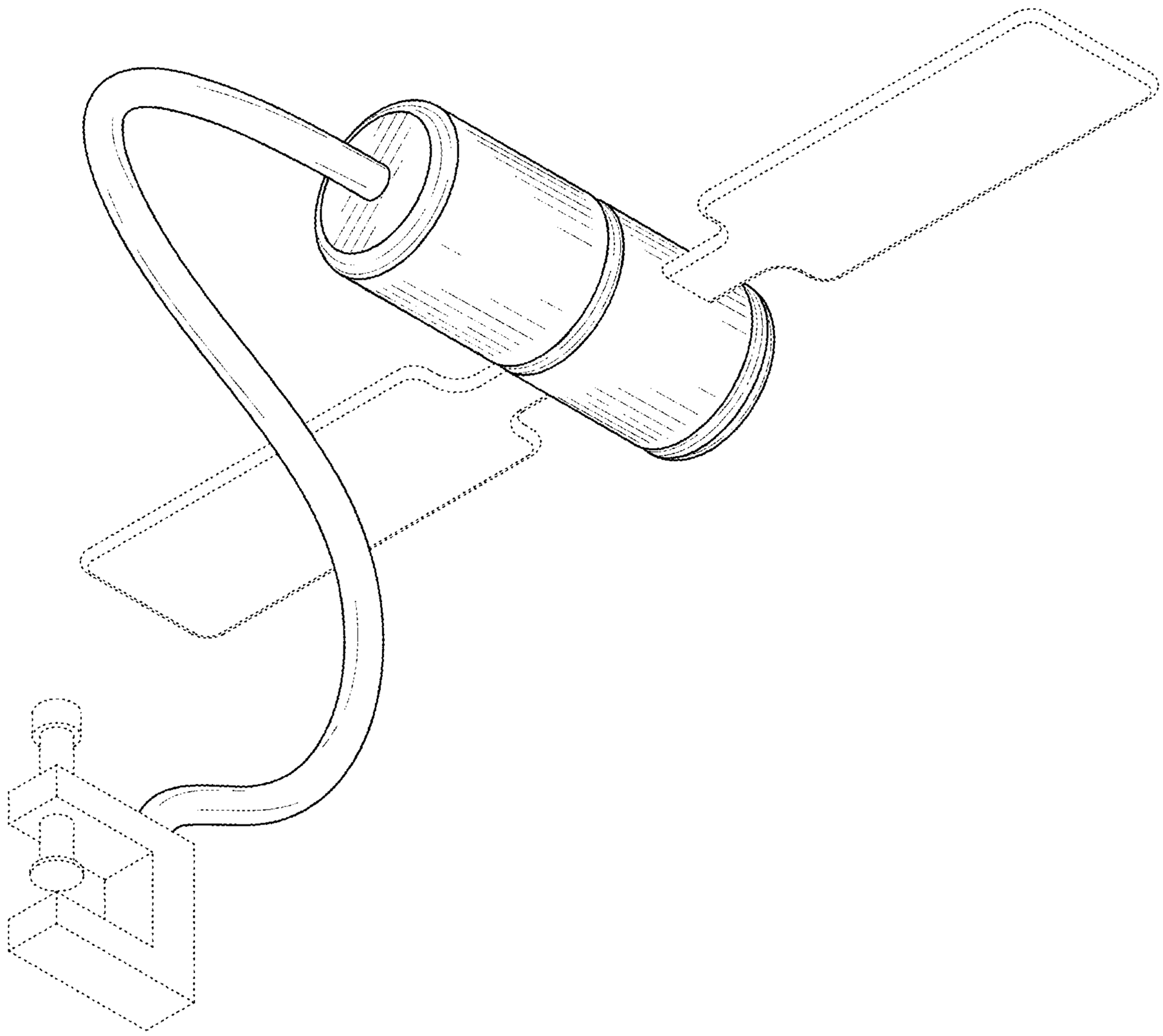

FIG. 10

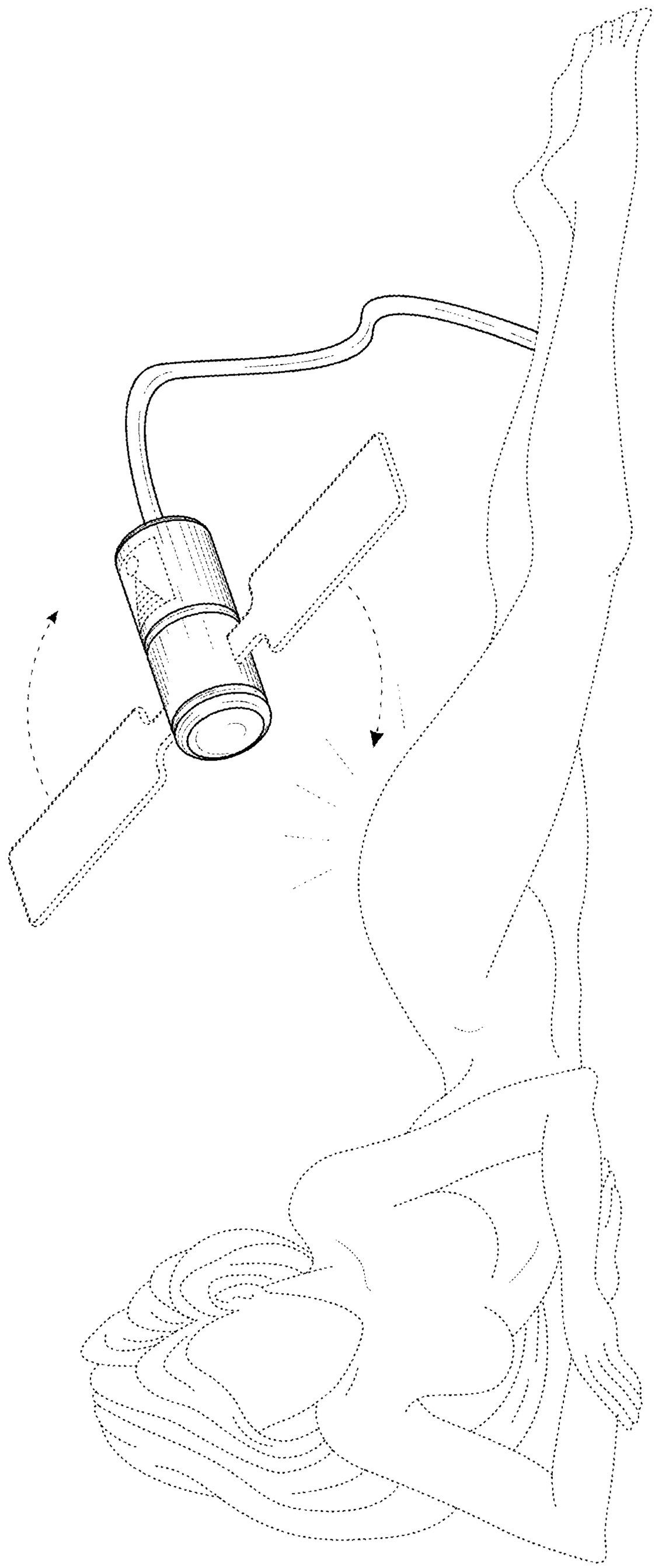

FIG. 11

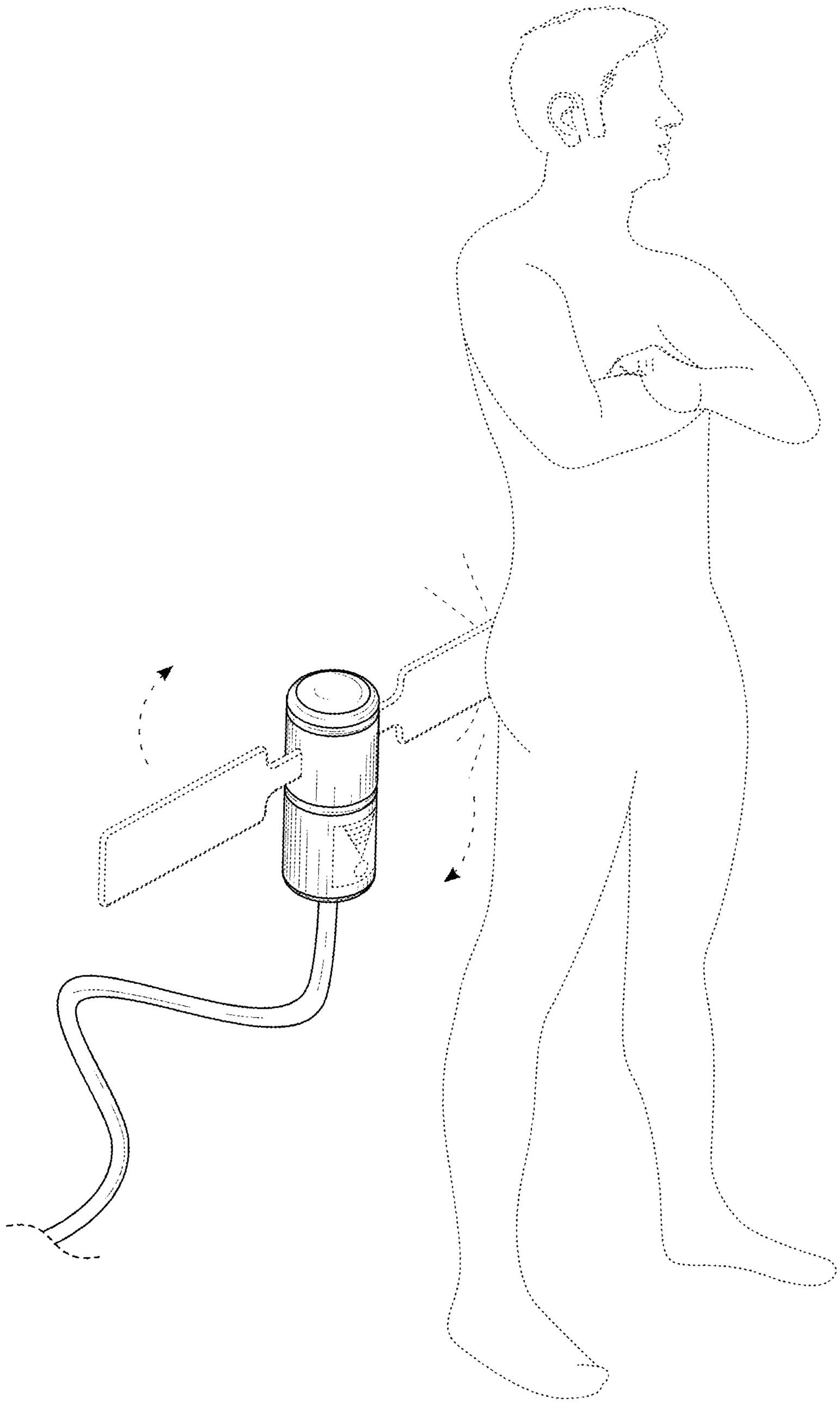

FIG. 12