US00D979735S

(12) United States Design Patent

Loibl et al.

(10) Patent No.: US D979,735 S
(45) Date of Patent: ** Feb. 28, 2023

(54) **FAN**

(71) Applicant: **VORNADO AIR, LLC**, Andover, KS (US)

(72) Inventors: **Byron Loibl**, Wichita, KS (US); **Brian Cartwright**, Wichita, KS (US); **Gregory Pease**, Andover, KS (US); **Glen Ediger**, North Newton, KS (US); **Cooper Phillips**, Wichita, KS (US)

(73) Assignee: **Vornado Air, LLC**, Andover, KS (US)

(**) Term: **15 Years**

(21) Appl. No.: **29/762,505**

(22) Filed: **Dec. 16, 2020**

(51) **LOC (14) Cl.** **23-04**

(52) **U.S. Cl.**
USPC **D23/378**; D23/370

(58) **Field of Classification Search**
USPC D23/332–337, 351, 352, 355, 356, 359, D23/364, 366, 370, 378, 381
CPC F04D 17/04; F04D 25/10
See application file for complete search history.

(56) **References Cited**

U.S. PATENT DOCUMENTS

D291,594 S * 8/1987 Norman D23/386
D382,048 S * 8/1997 Bennett D23/335
7,217,098 B2 * 5/2007 Lim F04D 17/04 416/100
9,501,111 B1 * 11/2016 Huang F04D 29/601
D927,662 S * 8/2021 Ediger D23/335
D950,700 S * 5/2022 Cartwright D23/370
D950,701 S * 5/2022 Cartwright D23/370
D954,246 S * 6/2022 Ediger D23/370
2006/0093463 A1 * 5/2006 Iyer F04D 17/04 415/53.1
2006/0264166 A1 * 11/2006 Ngan F24F 7/007 454/237
2016/0334841 A1 * 11/2016 Huang F04D 17/04

OTHER PUBLICATIONS

Sharper Image AXIS 47 AirBar Tower Fan AXIS47 Remote Control User Manual Vornado Air, date available Feb. 19, 2020, site visited Jun. 28, 2022, available from internet <https://fccid.io/WOT-AXIS47/User-Manual/15-AXIS-47-UserMan-US-4624801>.*

* cited by examiner

Primary Examiner — Sharon S Oum
(74) *Attorney, Agent, or Firm* — Avyno Law P.C.

(57) **CLAIM**

We claim the ornamental design for a fan, as shown and described.

DESCRIPTION

FIG. **1** is a perspective view of the front and right side perspective view of a fan of the present invention.
FIG. **2** is a perspective view of the back and left side perspective view of the fan of FIG. **1**.
FIG. **3** is a side elevation view of the left side of the fan of FIG. **1**
FIG. **4** is a side elevation view of the right side of the fan of FIG. **1**.
FIG. **5** is a front elevation view of the fan of FIG. **1**.
FIG. **6** is a back elevation view of the fan of FIG. **1**.
FIG. **7** is a top plan view of the fan of FIG. **1**; and,
FIG. **8** is a bottom plan view of the fan of FIG. **1**.
In the drawings, the broken lines depict portions of a fan that form no part of the claimed design.

1 Claim, 7 Drawing Sheets

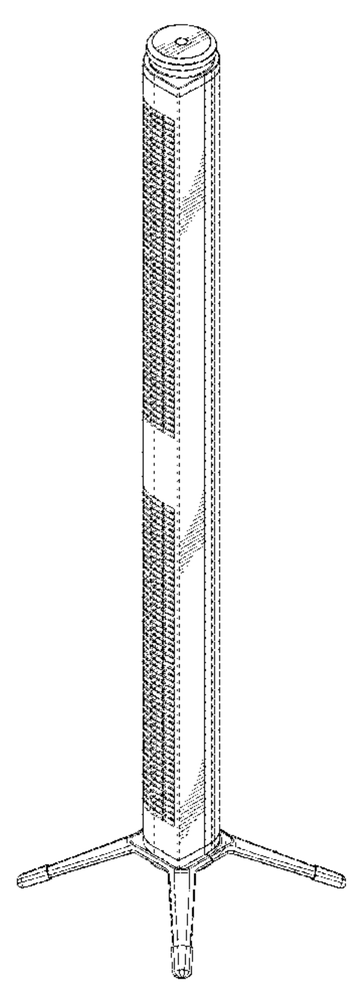

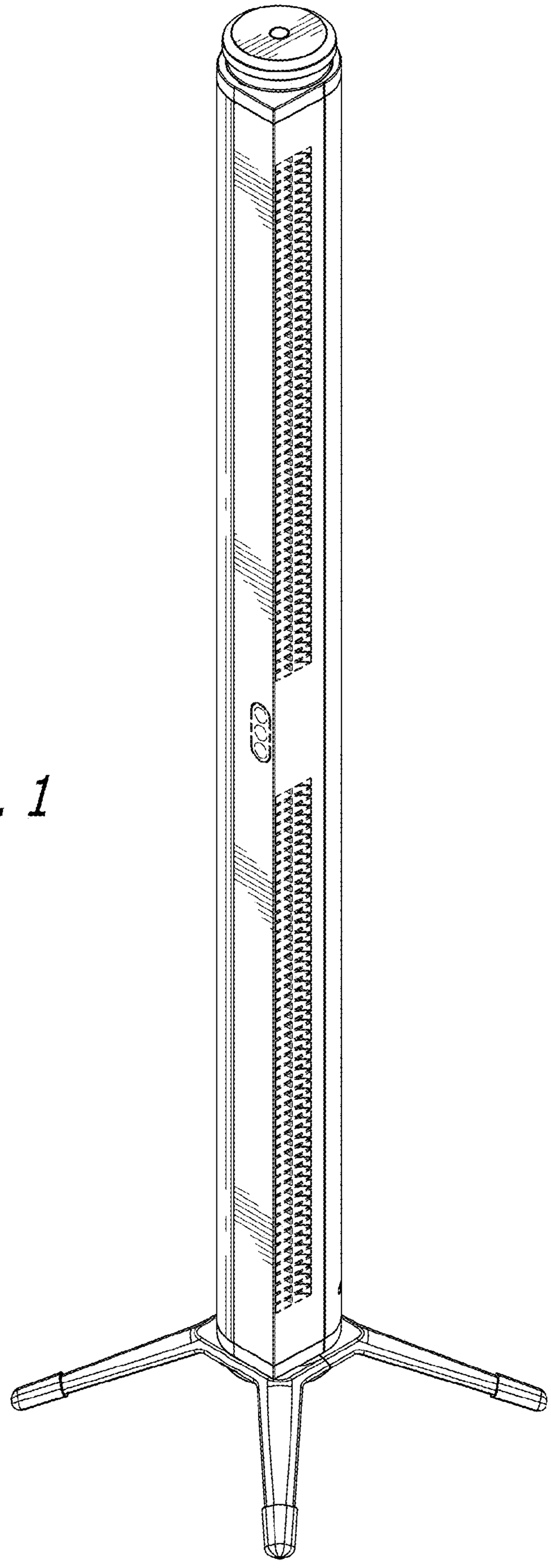

FIG. 1

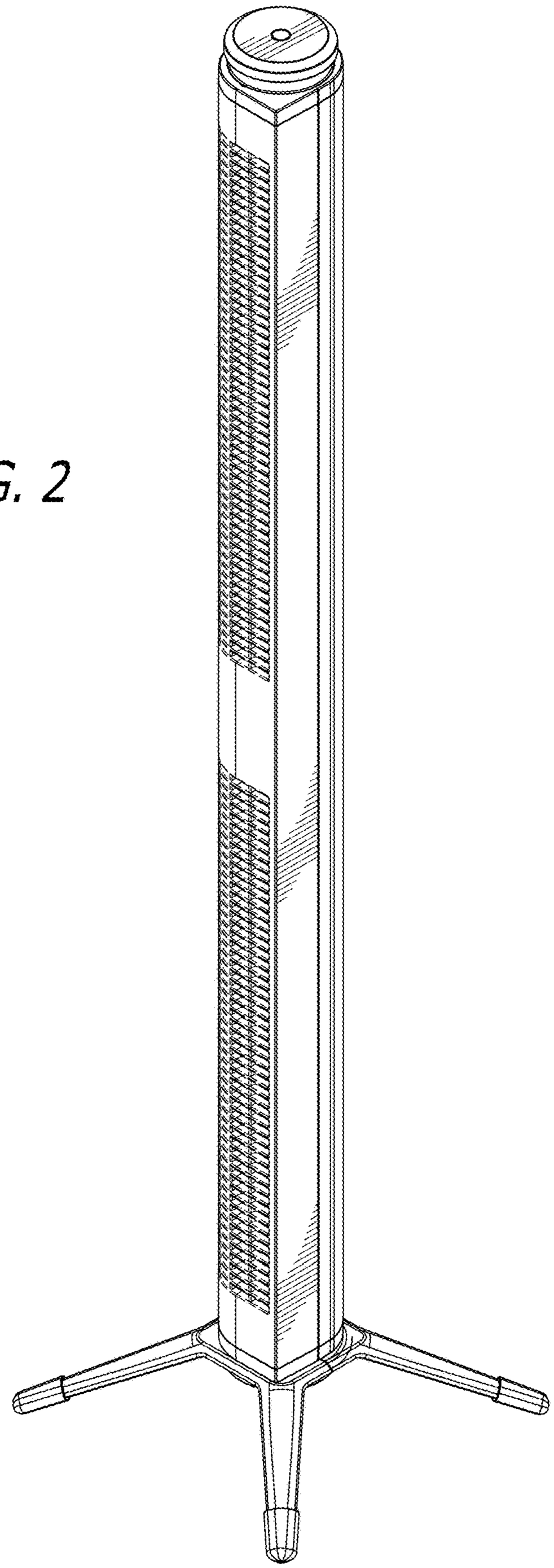

FIG. 2

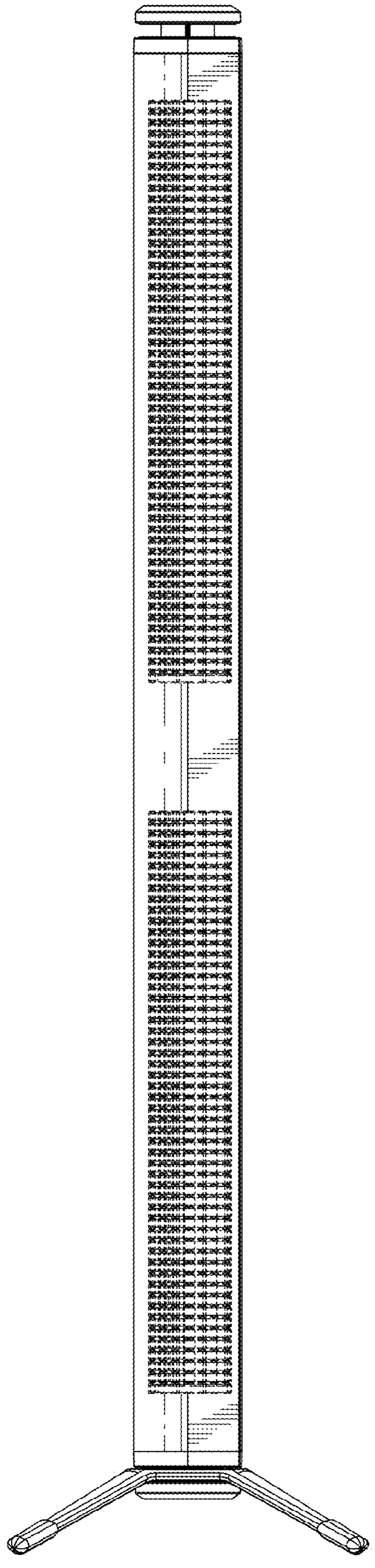

FIG. 3

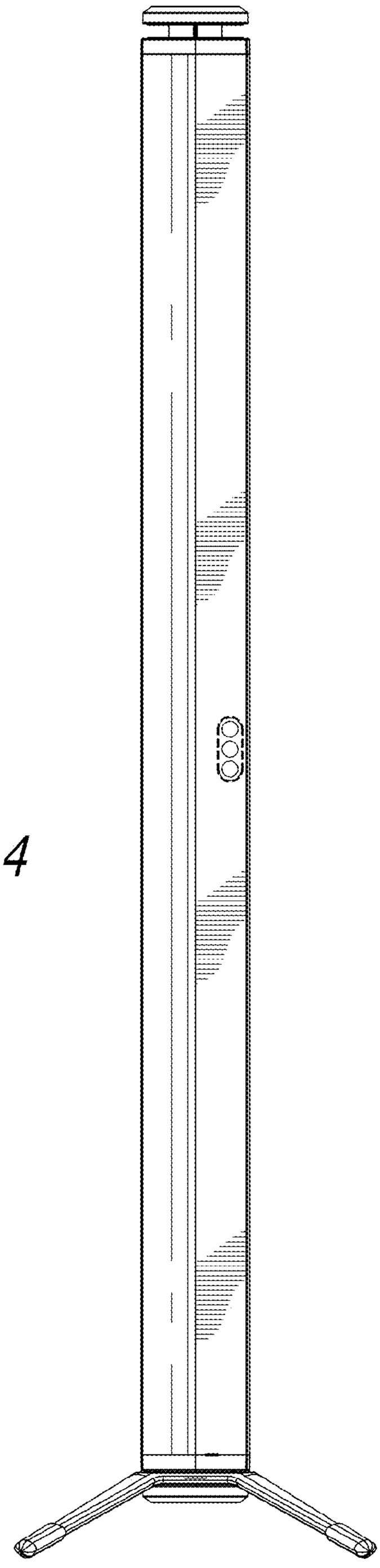

FIG. 4

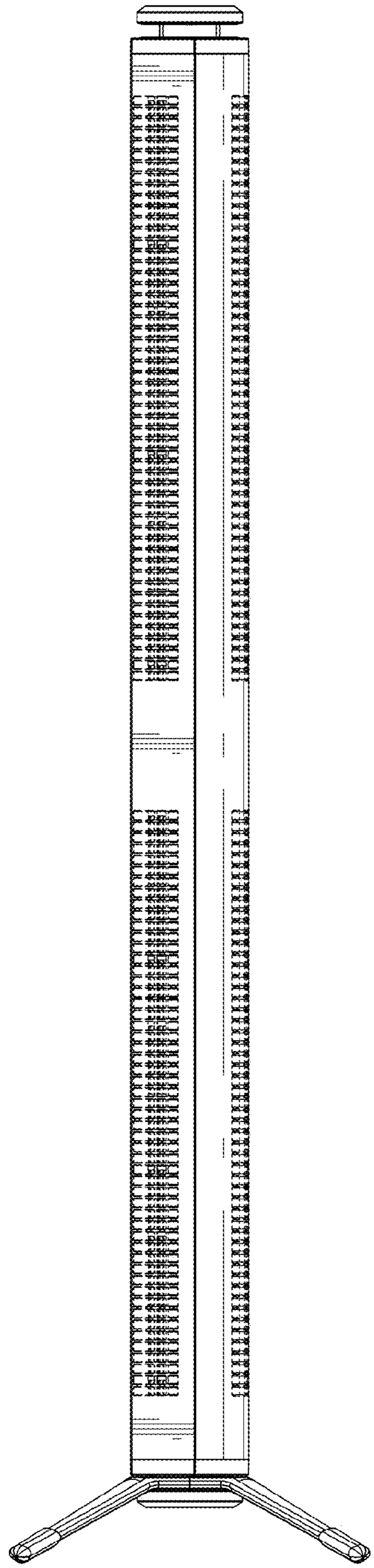

FIG. 5

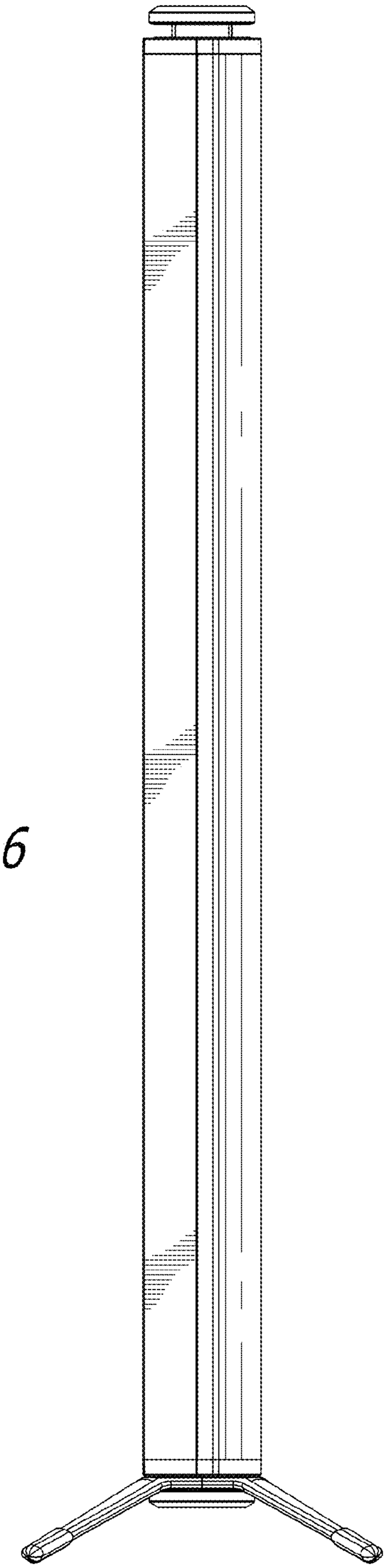

FIG. 6

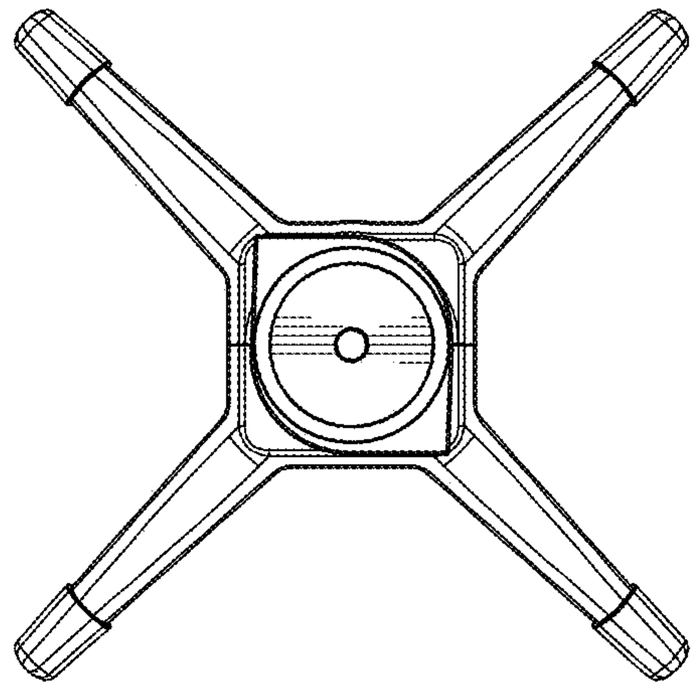

FIG. 7

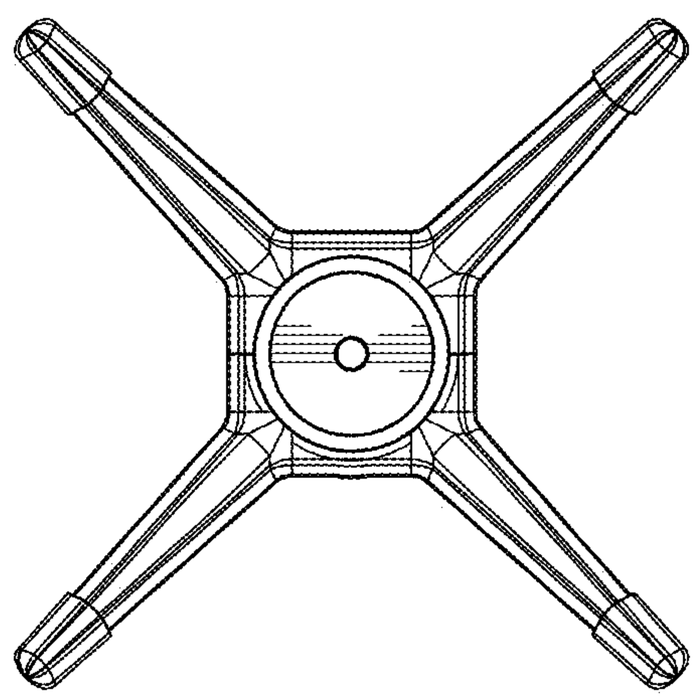

FIG. 8