US00D979679S

(12) United States Design Patent

Toulon et al.

(10) Patent No.: US D979,679 S
(45) Date of Patent: ** Feb. 28, 2023

(54) **PUTTER HEAD**

(71) Applicant: **Callaway Golf Company**, Carlsbad, CA (US)

(72) Inventors: **Sean Toulon**, Vista, CA (US); **Luke Williams**, Carlsbad, CA (US); **Patrick Dawson**, Poway, CA (US); **JulieAnn Larson**, Oceanside, CA (US); **Keith Kingston**, Carlsbad, CA (US)

(73) Assignee: **Topgolf Callaway Brands Corp.**, Carlsbad, CA (US)

(**) Term: **15 Years**

(21) Appl. No.: **29/797,859**

(22) Filed: **Jul. 2, 2021**

(51) **LOC (14) Cl.** **21-02**

(52) **U.S. Cl.**
USPC **D21/736**

(58) **Field of Classification Search**
USPC D21/736–746, 759
CPC A63B 53/00; A63B 53/04; A63B 53/007; A63B 53/065; A63B 53/0487; A63B 60/00; A63B 60/46
See application file for complete search history.

(56) **References Cited**

U.S. PATENT DOCUMENTS

D653,718 S * 2/2012 Stokke D21/743
D715,388 S * 10/2014 Serrano D21/743
D774,607 S * 12/2016 Serrano D21/743
D774,610 S * 12/2016 Serrano D21/744
9,757,626 B2 * 9/2017 Quan A63B 53/007
10,105,578 B2 * 10/2018 Quan A63B 60/00
D840,482 S * 2/2019 Serrano D21/736
D879,222 S * 3/2020 Serrano D21/742
D898,848 S * 10/2020 Clarke D21/743
D928,259 S * 8/2021 Andrews D21/736
D954,873 S * 6/2022 Andrews D21/736
D972,057 S * 12/2022 Clarke D21/743
2014/0128173 A1 * 5/2014 Quan A63B 53/0487 427/430.1
2017/0036078 A1 * 2/2017 Serrano A63B 53/0487

* cited by examiner

Primary Examiner — Mitchell I. Siegel
(74) *Attorney, Agent, or Firm* — Michael A. Catania; Rebecca Hanovice; Sonia Lari

(57) **CLAIM**

The ornamental design for a putter head, as shown and described.

DESCRIPTION

FIG. **1** is a rear perspective view of the putter head claimed herein;
FIG. **2** is a front elevational view thereof;
FIG. **3** is a rear elevational view thereof;
FIG. **4** is a left side elevational view thereof;
FIG. **5** is a right side elevational view thereof;
FIG. **6** is a top plan view thereof; and,
FIG. **7** is a bottom plan view thereof.
The broken lines shown in the drawings form no part of the claimed design.

1 Claim, 5 Drawing Sheets

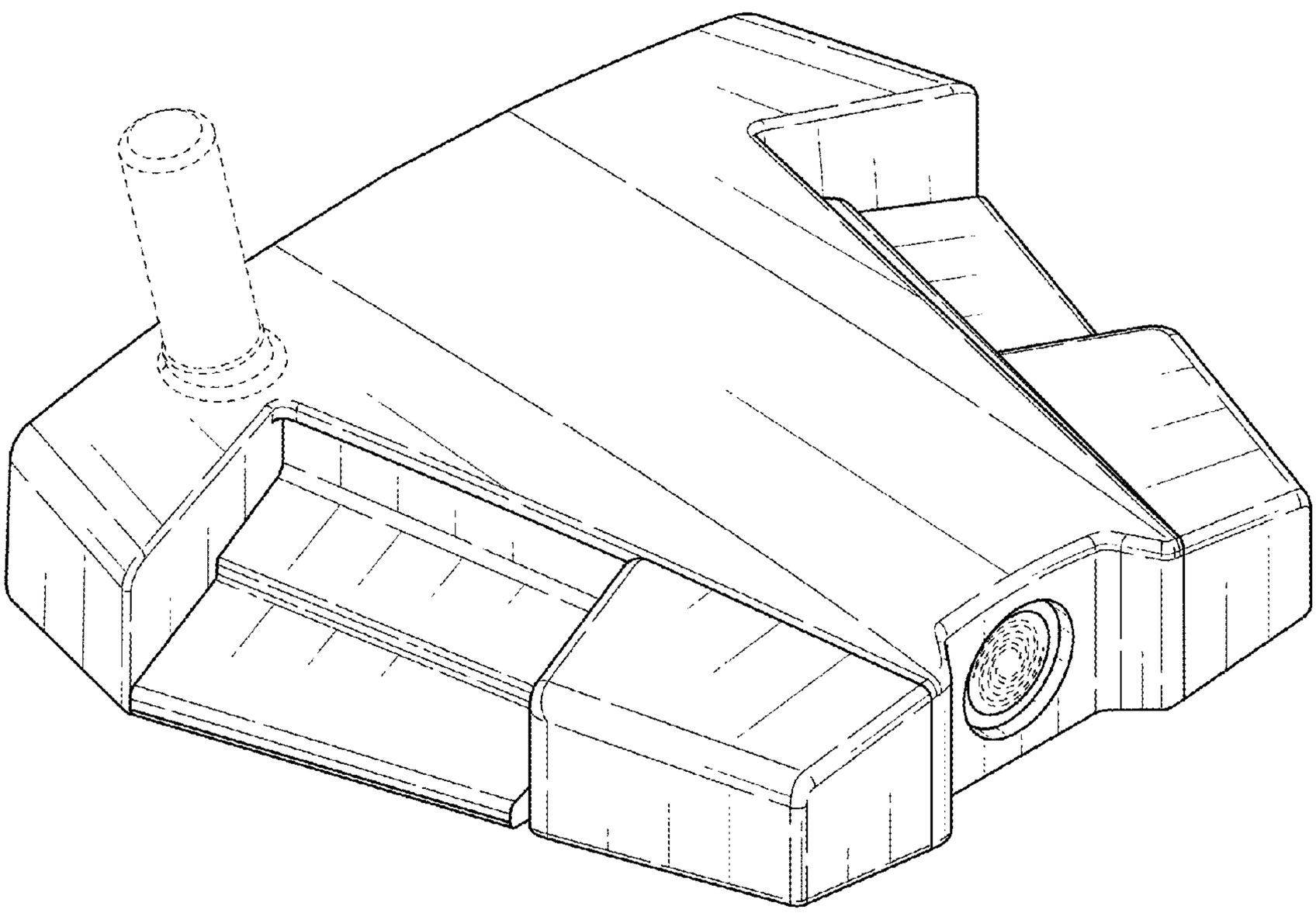

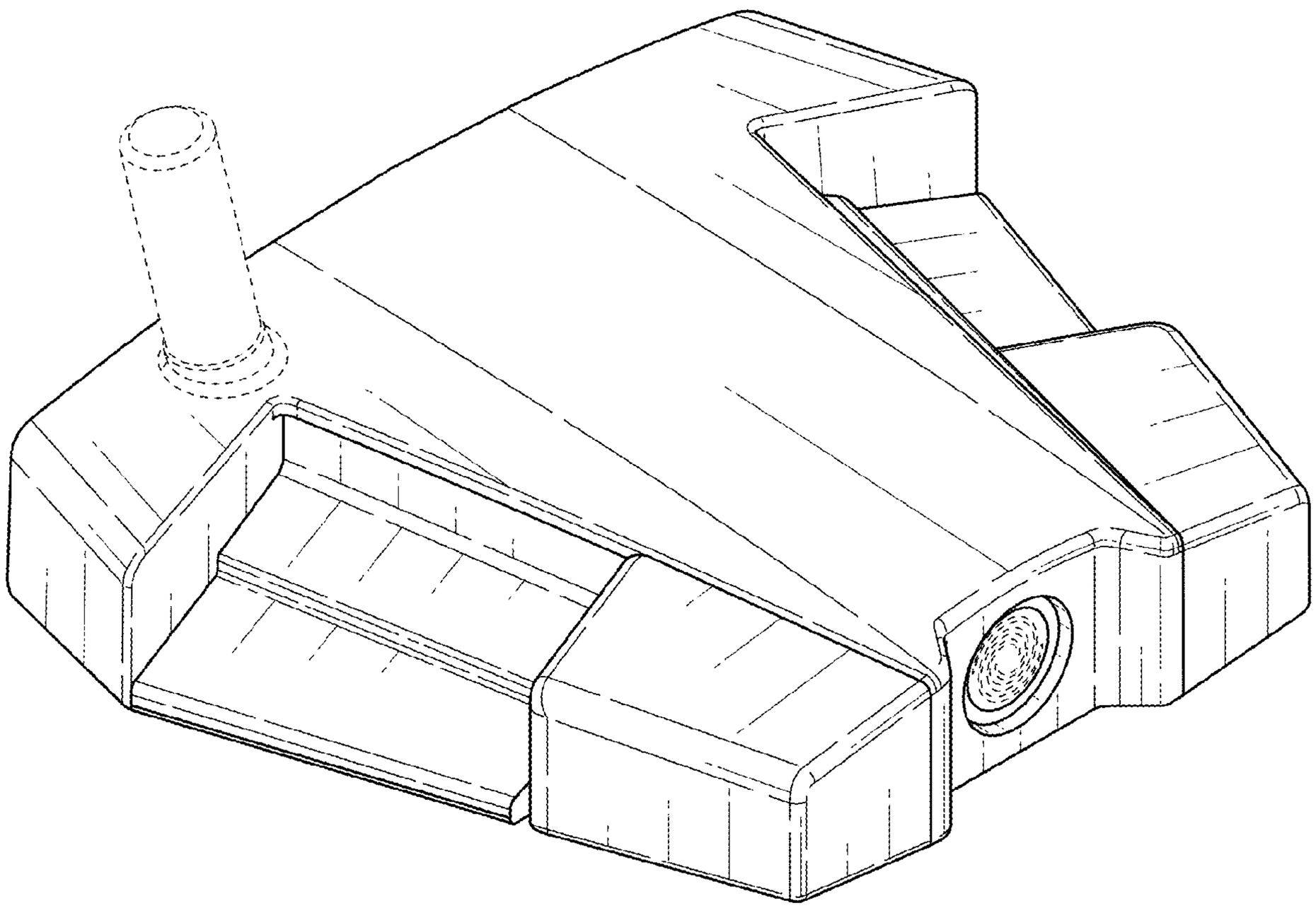

FIG. 1

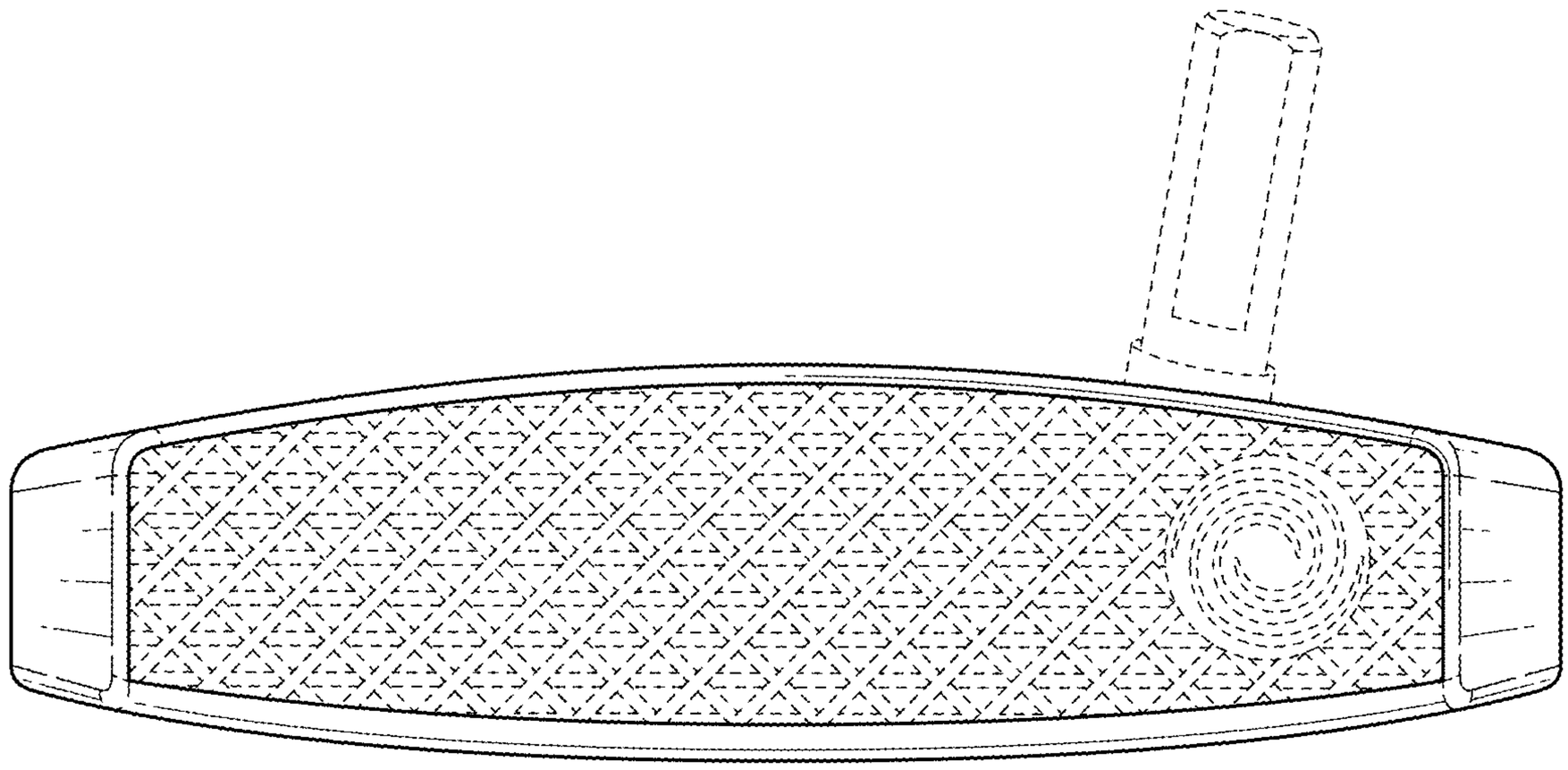

FIG. 2

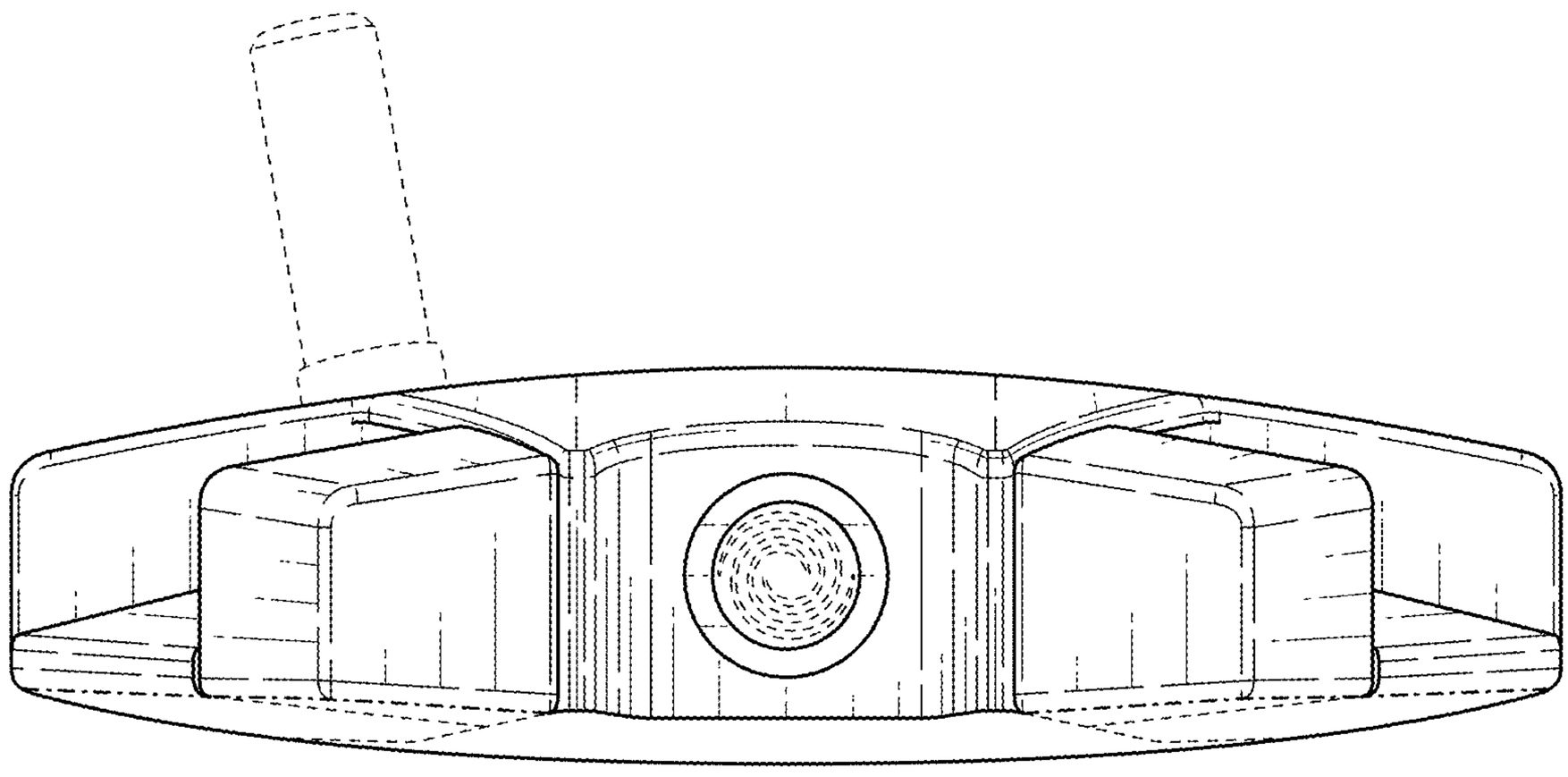

FIG. 3

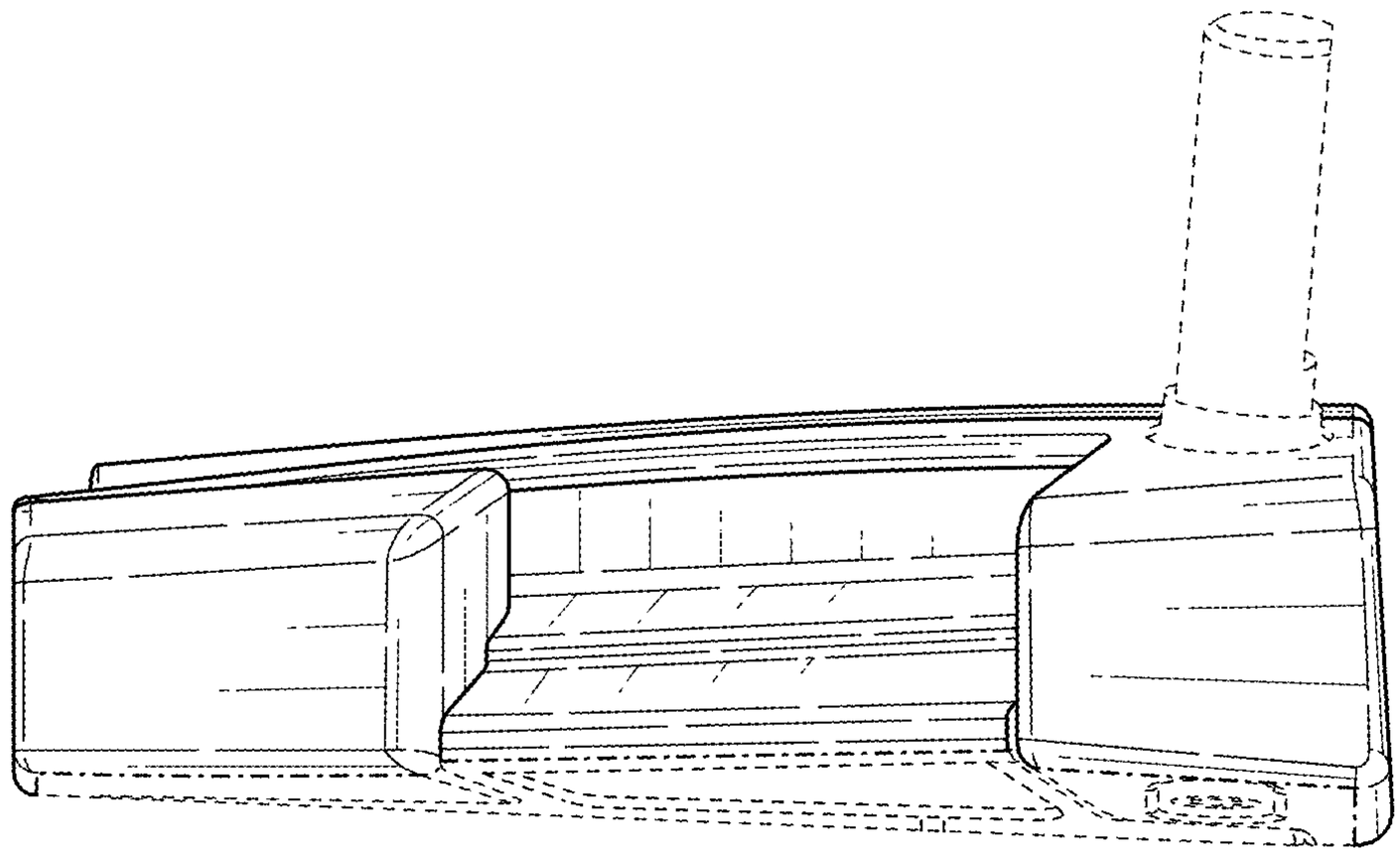

FIG. 4

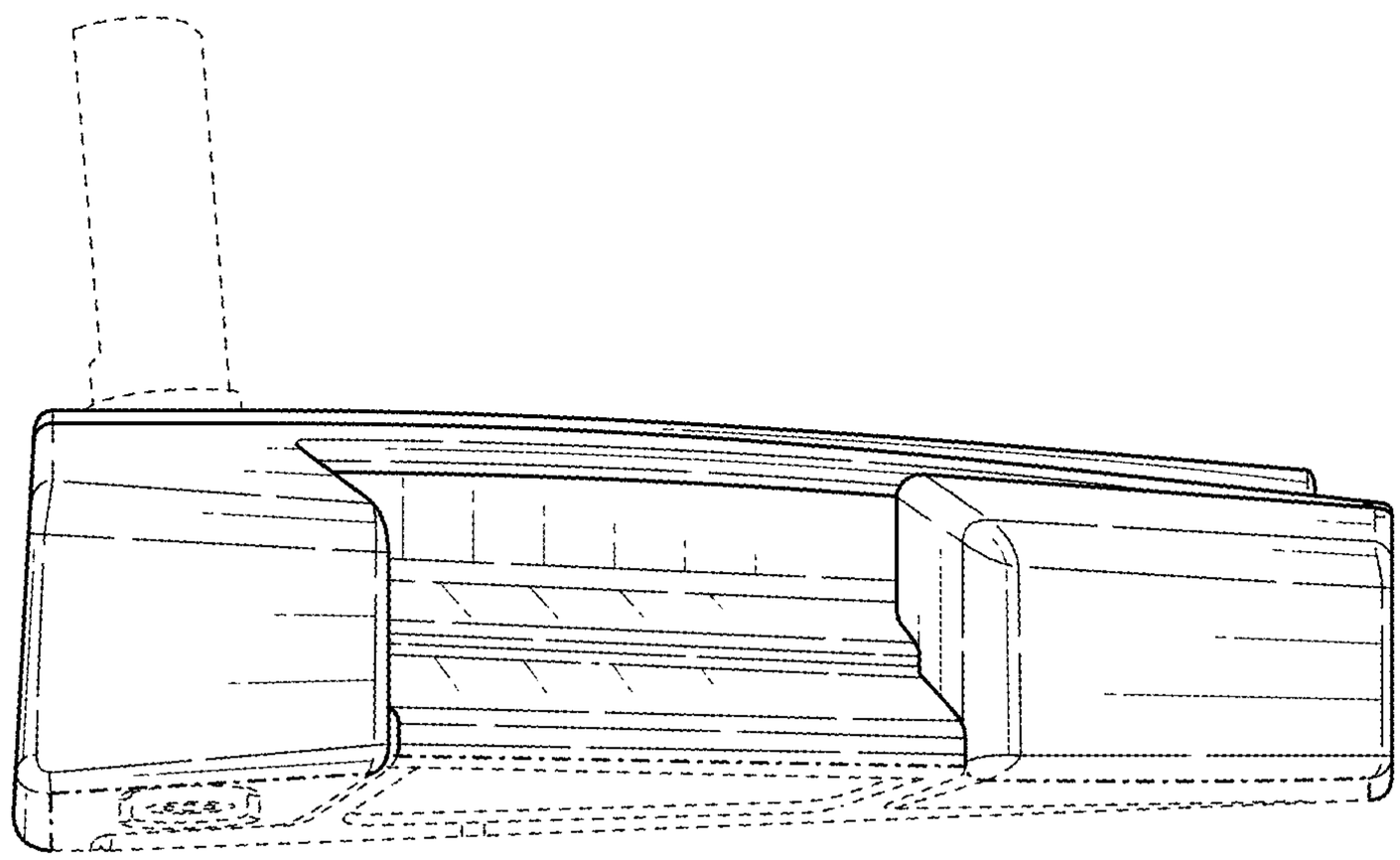

FIG. 5

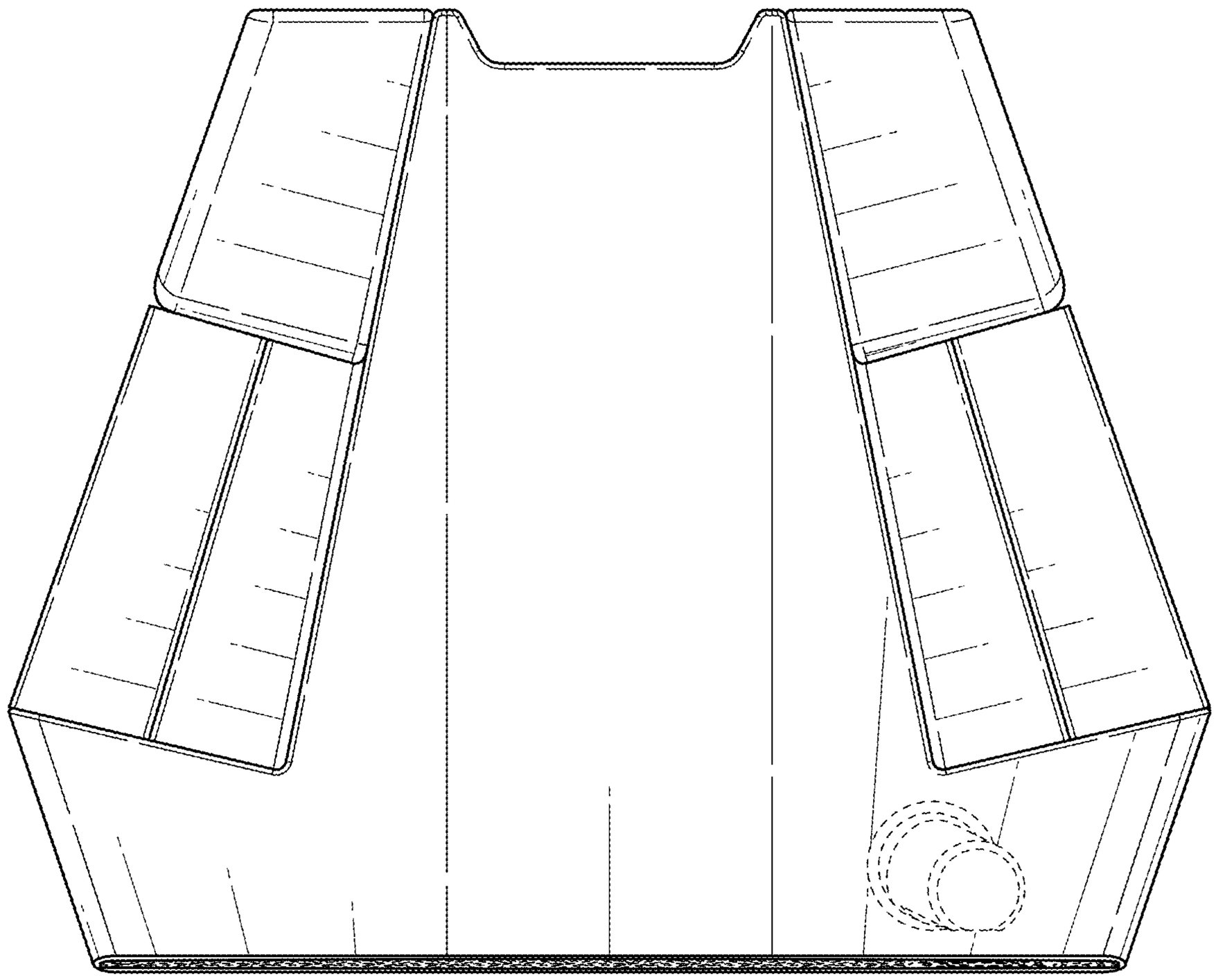

FIG. 6

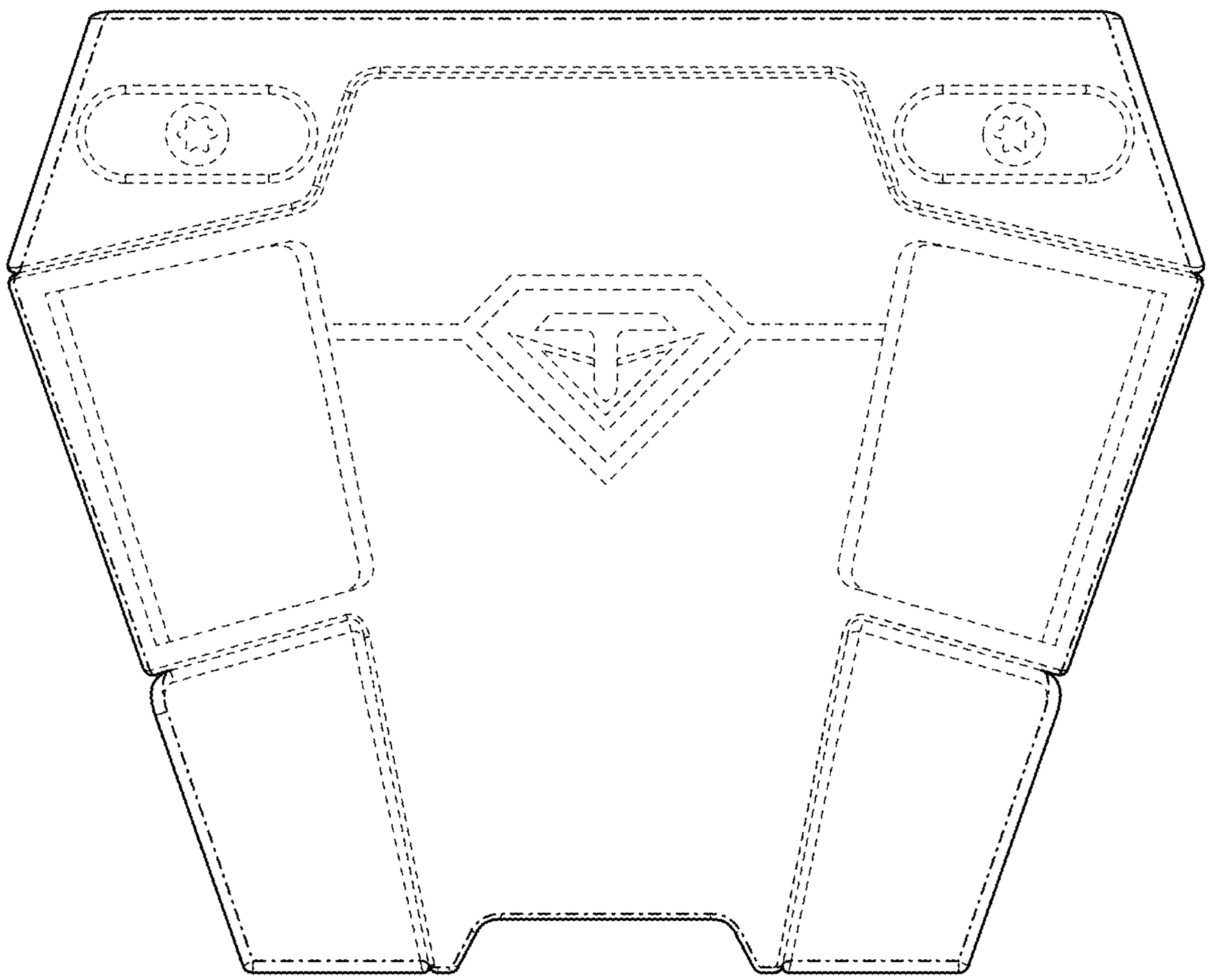

FIG. 7