US00D979095S

(12) United States Design Patent

Kim et al.

(10) Patent No.: US D979,095 S
(45) Date of Patent: ** Feb. 21, 2023

(54) **INDOOR WALL WITH BUILTIN HOME APPLIANCES**

(71) Applicant: **LG Electronics Inc.**, Seoul (KR)

(72) Inventors: **Yunjoo Kim**, Seoul (KR); **Kisang Jung**, Seoul (KR); **Hwasuk Shim**, Seoul (KR); **Jaemyo Shim**, Seoul (KR)

(73) Assignee: **LG ELECTRONICS INC.**, Seoul (KR)

(**) Term: **15 Years**

(21) Appl. No.: **35/512,212**

(22) Filed: **Jan. 18, 2021**

(80) **Hague Agreement Data**

Int. Filing Date: **Jan. 18, 2021**
Int. Reg. No.: **DM/212676**
Int. Reg. Date: **Jan. 18, 2021**
Int. Reg. Pub. Date: **Jul. 23, 2021**

(30) **Foreign Application Priority Data**

Jul. 22, 2020 (KR) 30-2020-0033869

(51) **LOC (14) Cl.** **25-02**

(52) **U.S. Cl.**
USPC **D25/58**; D24/217

(58) **Field of Classification Search**
USPC D6/668.1, 668.2, 670, 671, 671.1; D13/162, 170; D14/302, 305; D25/58, D25/199

(Continued)

(56) **References Cited**

U.S. PATENT DOCUMENTS

D141,374 S * 5/1945 Miller D6/671.1
D194,470 S * 1/1963 Parmet D6/671.1

(Continued)

OTHER PUBLICATIONS

Movable_Partition (available online) Retrieved from the internet Oct. 6, 2022 from URL: https://www.egmovablewall.com/news/movable-partition-installation-project-of-fuzh-39443125.html.*

Primary Examiner — Richard Kearney
(74) *Attorney, Agent, or Firm* — Birch, Stewart, Kolasch & Birch, LLP

(57) **CLAIM**

The ornamental design for an indoor wall with built-in home appliances, as shown and described.

DESCRIPTION

1. Indoor wall with built-in home appliances
1.1 : Perspective
1.2 : Front
1.3 : Back
1.4 : Left, right view being a mirror image thereof
1.5 : Top
1.6 : Bottom
1.7 : Another Front view
1.8 : Perspective view showing alternate state of use
1.9 : Perspective
1.10: Front
1.11 : Back
1.12: Left, right view being a mirror image thereof
1.13 : Top
1.14: Bottom
1.15: Perspective view showing alternate state of use
1.16 : Perspective view showing alternate state of use
1.17: Front
1.18: Back
1.19: Left, right view being a mirror image thereof
1.20 : Top
1.21: Bottom
1.22: Front
1.23: Perspective view showing alternate state of use
1.24: Perspective view showing alternate state of use
1.25 : Front
1.26 : Back
1.27: Left, right view being a mirror image thereof

(Continued)

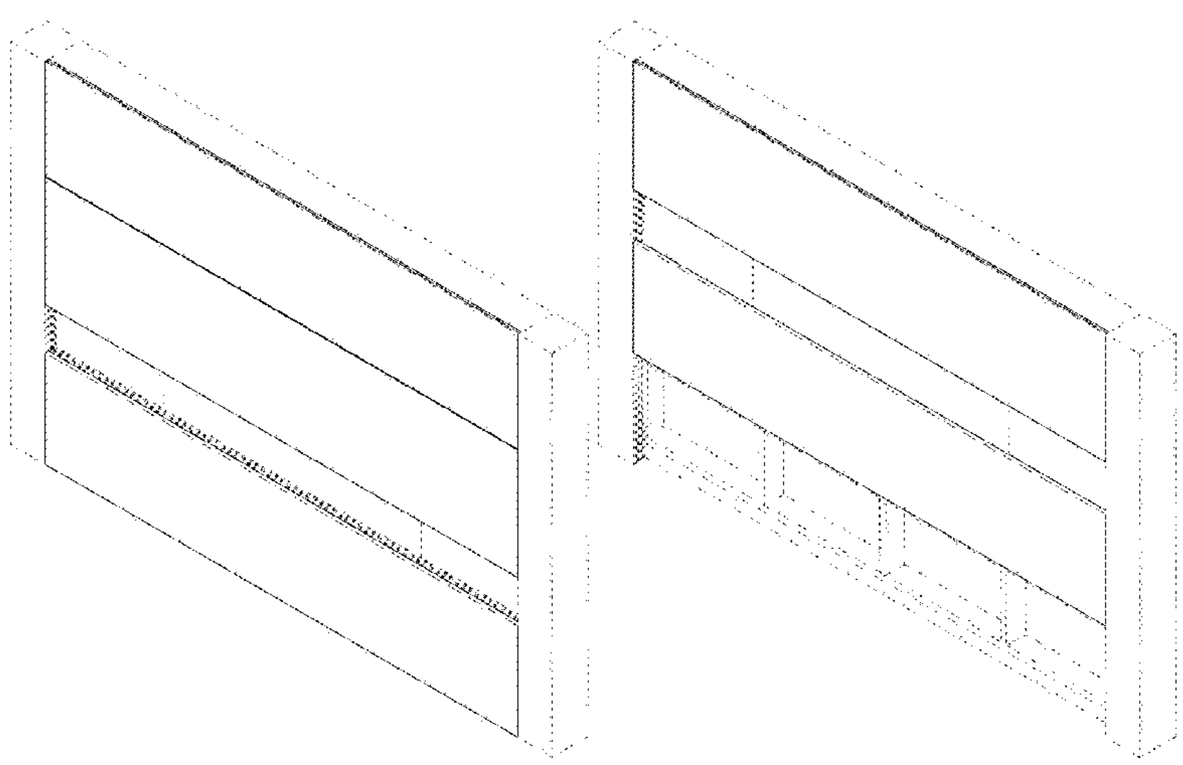

1.28 : Top
1.29 : Bottom
The broken lines depict portions of the indoor wall with built-in home appliances that form no part of the claimed design.

1 Claim, 29 Drawing Sheets

(58) **Field of Classification Search**
CPC A47B 81/06; A47B 97/001; H04N 5/64; E06B 3/32; E06B 3/44; E06B 3/46; E06B 3/5063; E06B 5/04; E06B 5/06; E04F 19/022; E04F 19/062; E04F 19/065
See application file for complete search history.

(56) **References Cited**

U.S. PATENT DOCUMENTS

D299,758	S	*	2/1989	Kelley	D25/60
D649,376	S	*	11/2011	Borgonovo	D6/671.1
8,713,857	B2	*	5/2014	Logue	E04B 2/827 312/246
8,970,795	B2	*	3/2015	Lemieux	F16M 11/18 348/836
9,273,473	B2	*	3/2016	Millson	F16M 13/02
9,955,783	B1	*	5/2018	Lu	E05F 15/70
D831,583	S	*	10/2018	Poulheim	D13/164
D834,537	S	*	11/2018	Poulheim	D13/162
D834,538	S	*	11/2018	Poulheim	D13/162
D834,540	S	*	11/2018	Poulheim	D13/164
11,000,126	B1	*	5/2021	Kim	A47B 97/001
D938,395	S	*	12/2021	Park	D14/217
D939,472	S	*	12/2021	Kim	D14/217
D939,473	S	*	12/2021	Kim	D14/217
D939,474	S	*	12/2021	Kim	D14/217
D940,104	S	*	1/2022	Kim	D14/217
D940,105	S	*	1/2022	Kim	D14/217
D941,265	S	*	1/2022	Kim	D14/217
D941,266	S	*	1/2022	Kim	D14/217
D941,267	S	*	1/2022	Kim	D14/217
D941,268	S	*	1/2022	Kim	D14/217
2004/0135476	A1	*	7/2004	Gillengerten	H04R 5/02 312/7.2
2004/0222721	A1	*	11/2004	Kelley	A47B 45/00 312/205
2005/0133231	A1	*	6/2005	Conerton	A47B 81/06 174/17 VA
2007/0157521	A1	*	7/2007	Ito	E06B 3/5063 49/185
2011/0000138	A1	*	1/2011	Stoutenborough	E06B 3/46 49/458
2014/0368096	A1	*	12/2014	Pachmayr	A47B 81/06 312/7.2
2015/0252613	A1	*	9/2015	Lui	E06B 3/46 49/130

* cited by examiner

1.1

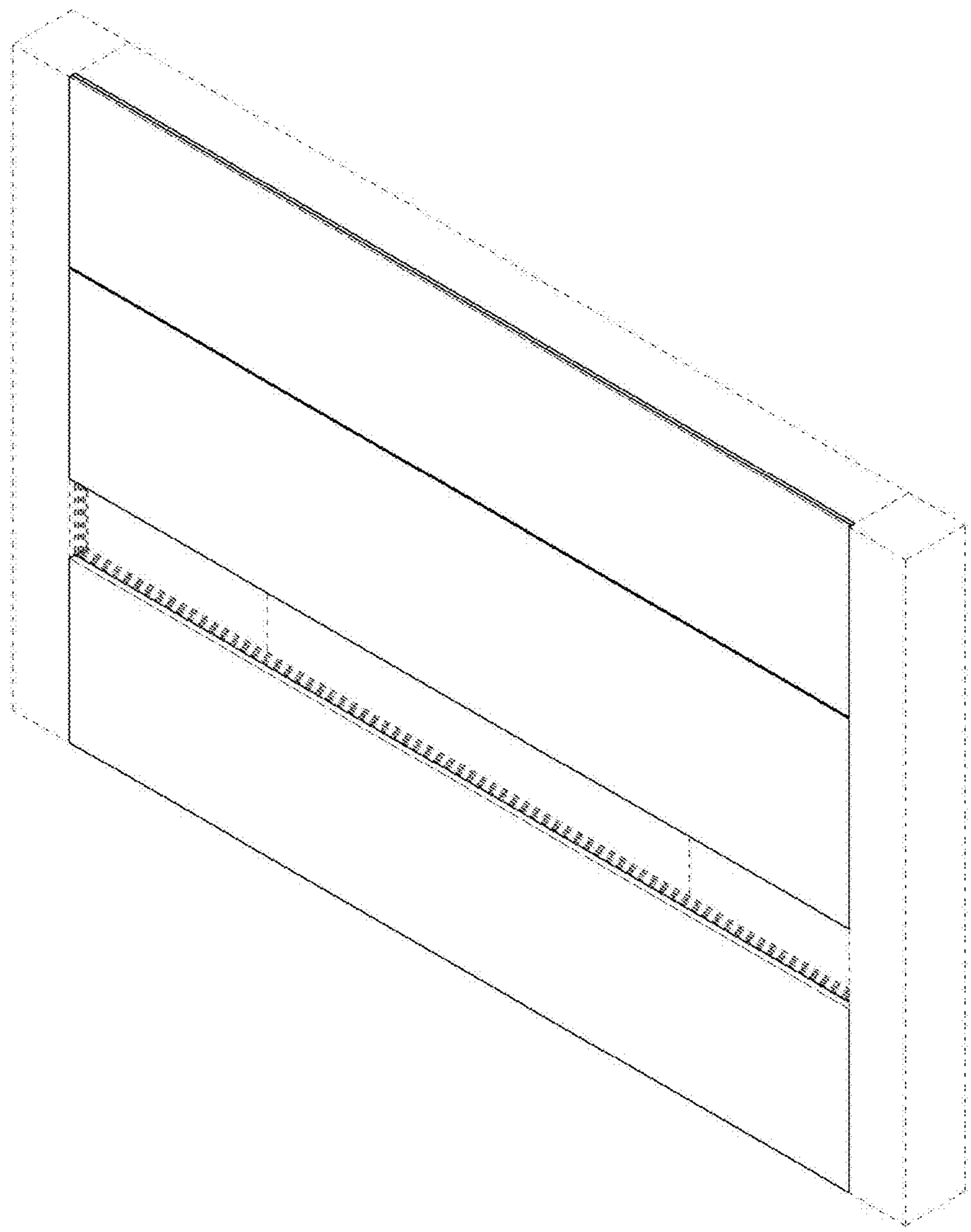

1.2

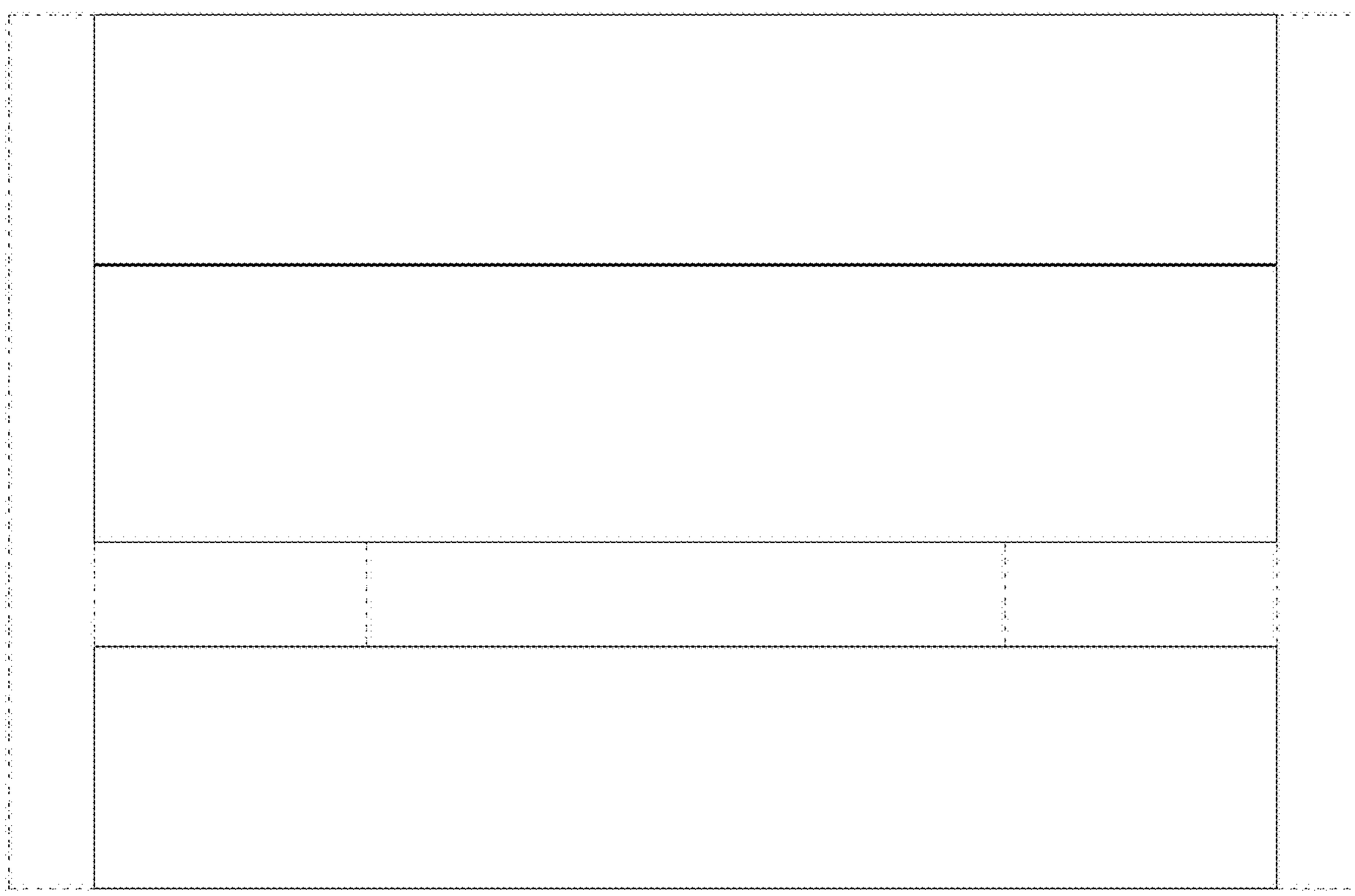

1.3

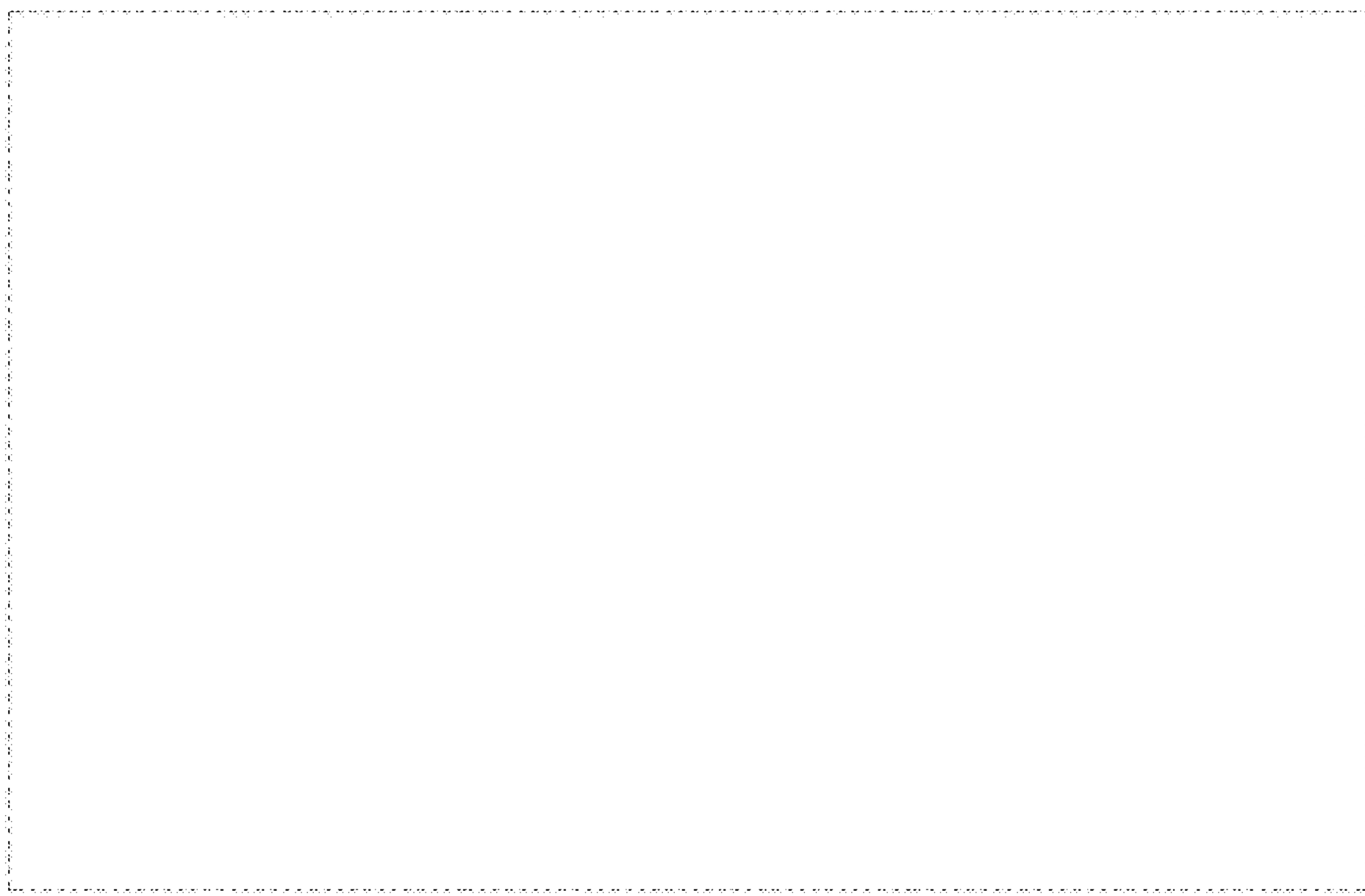

1.4

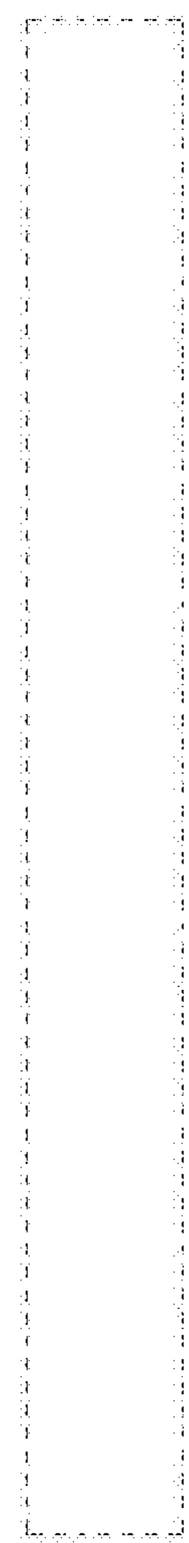

1.5

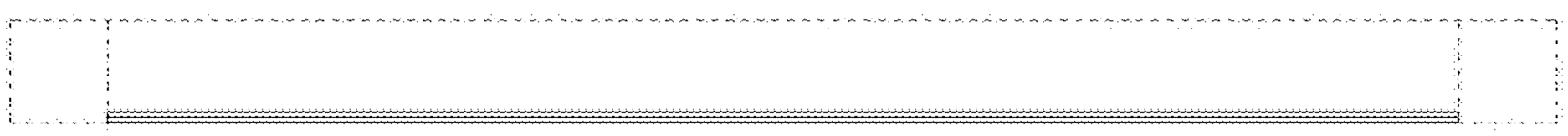

1.6

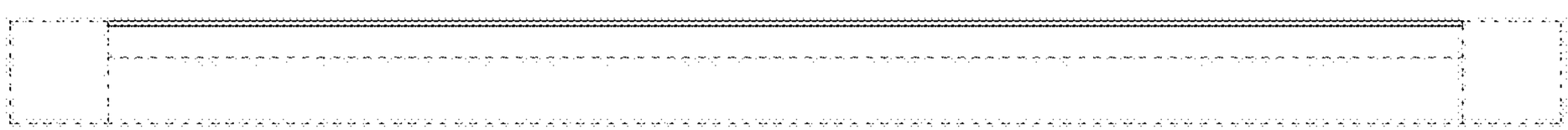

1.7

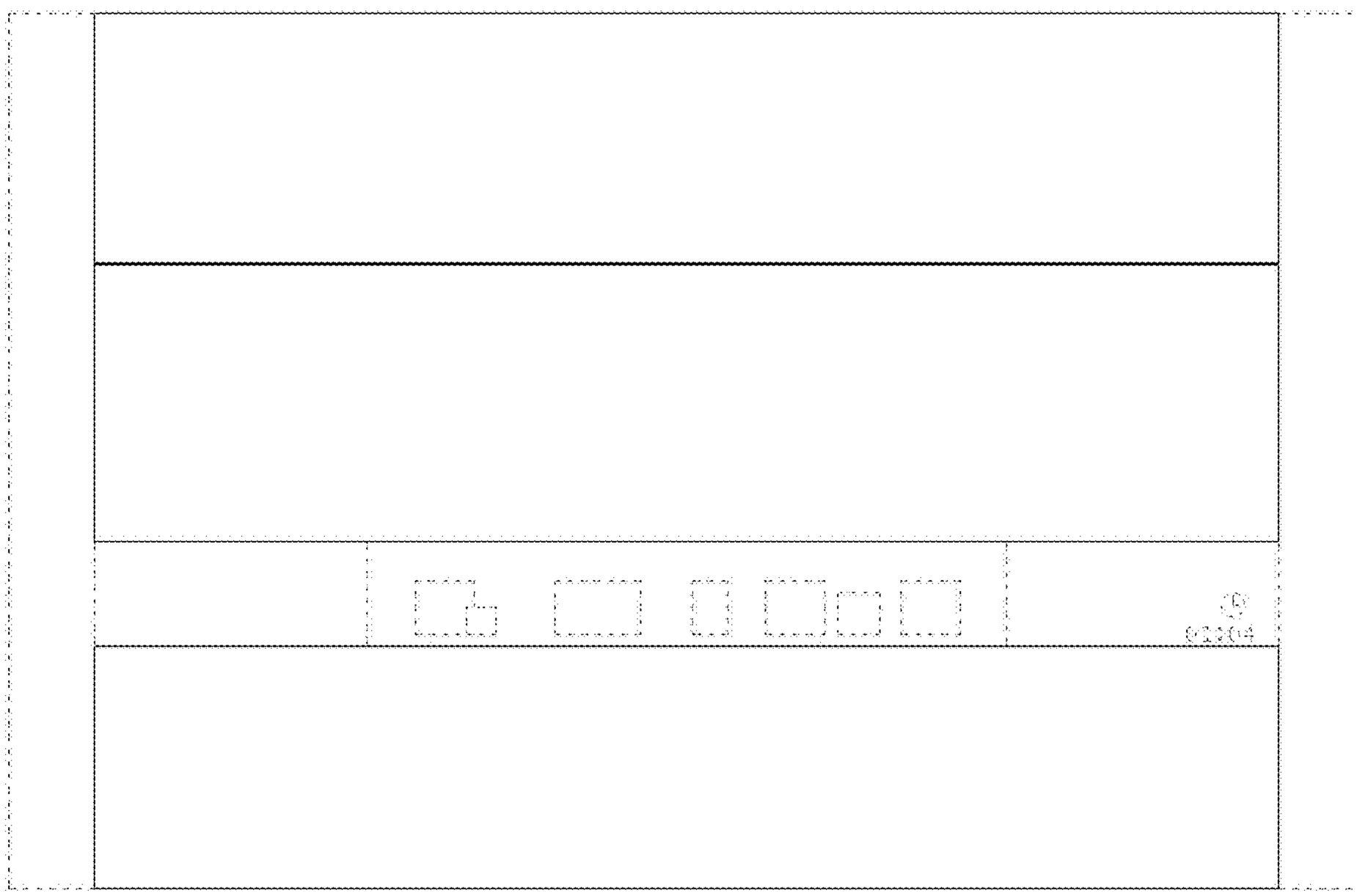

1.8

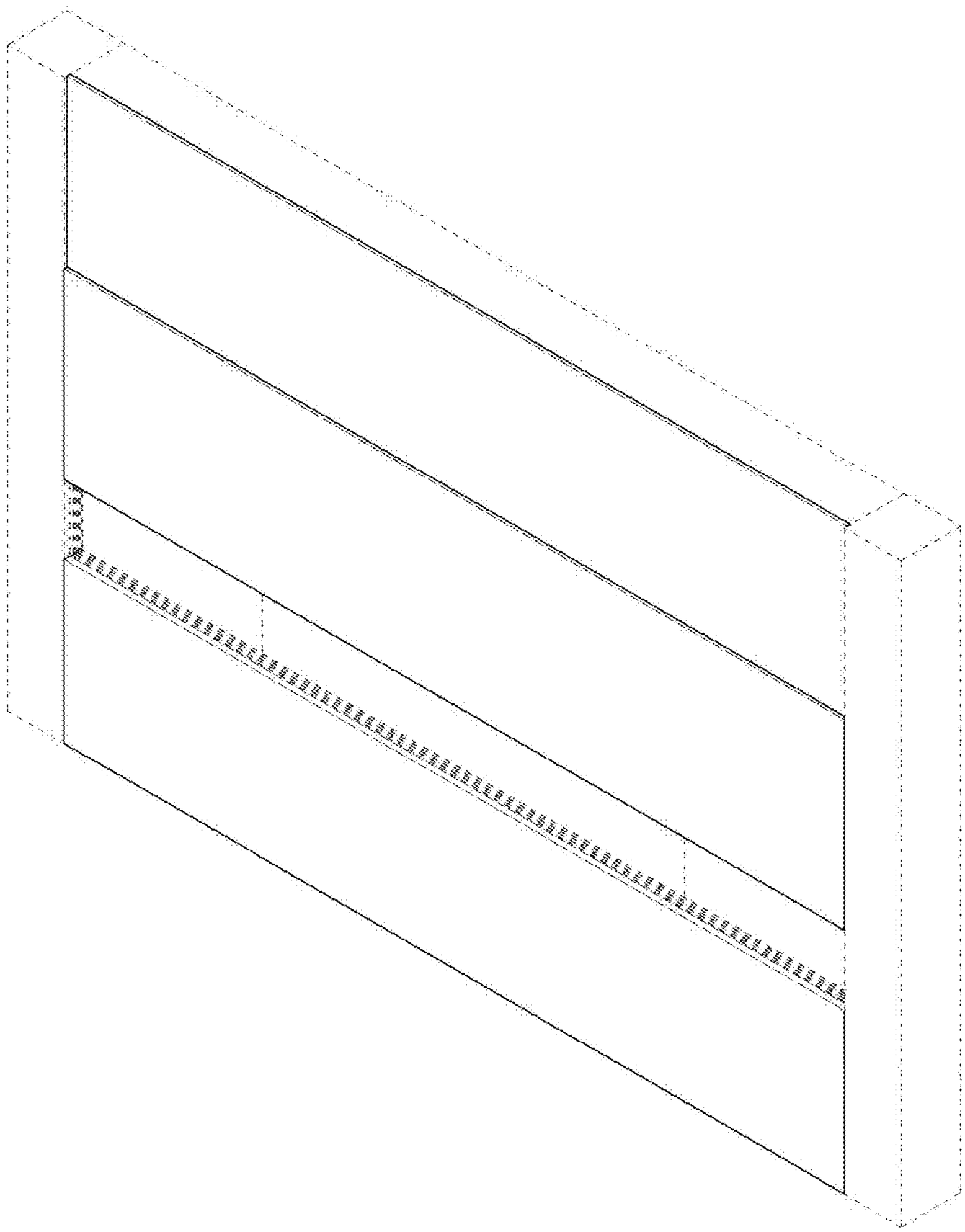

1.9

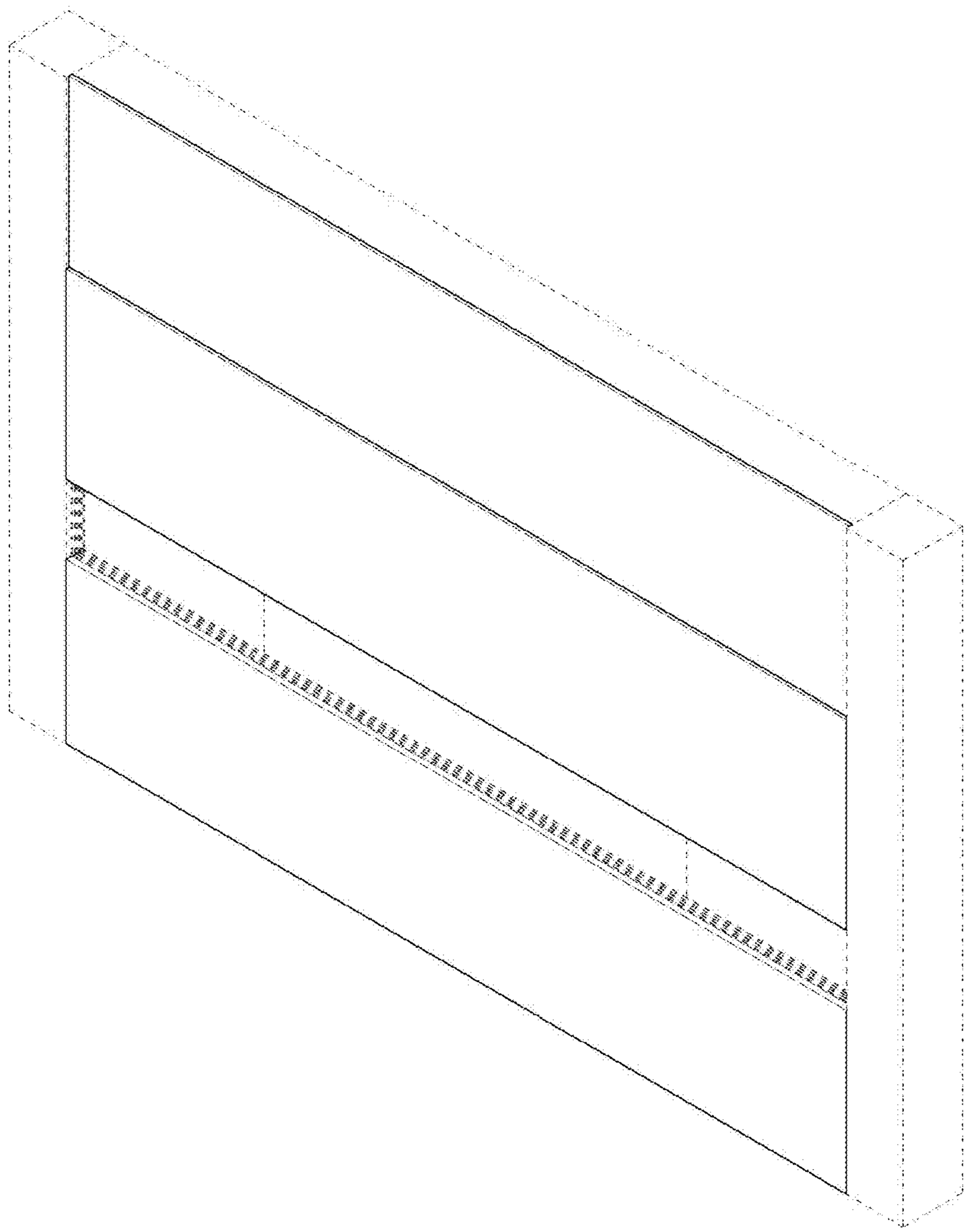

1.10

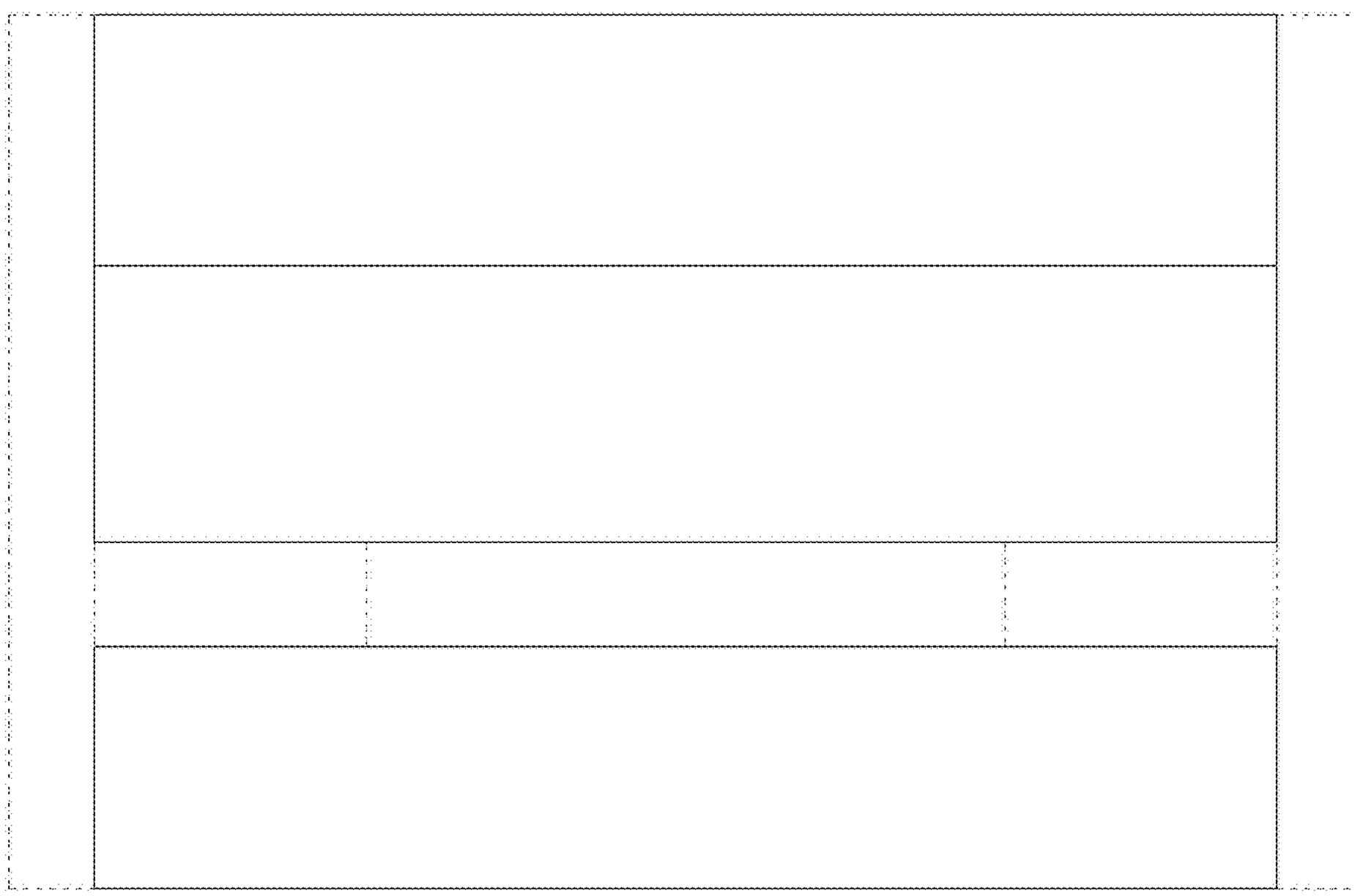

1.11

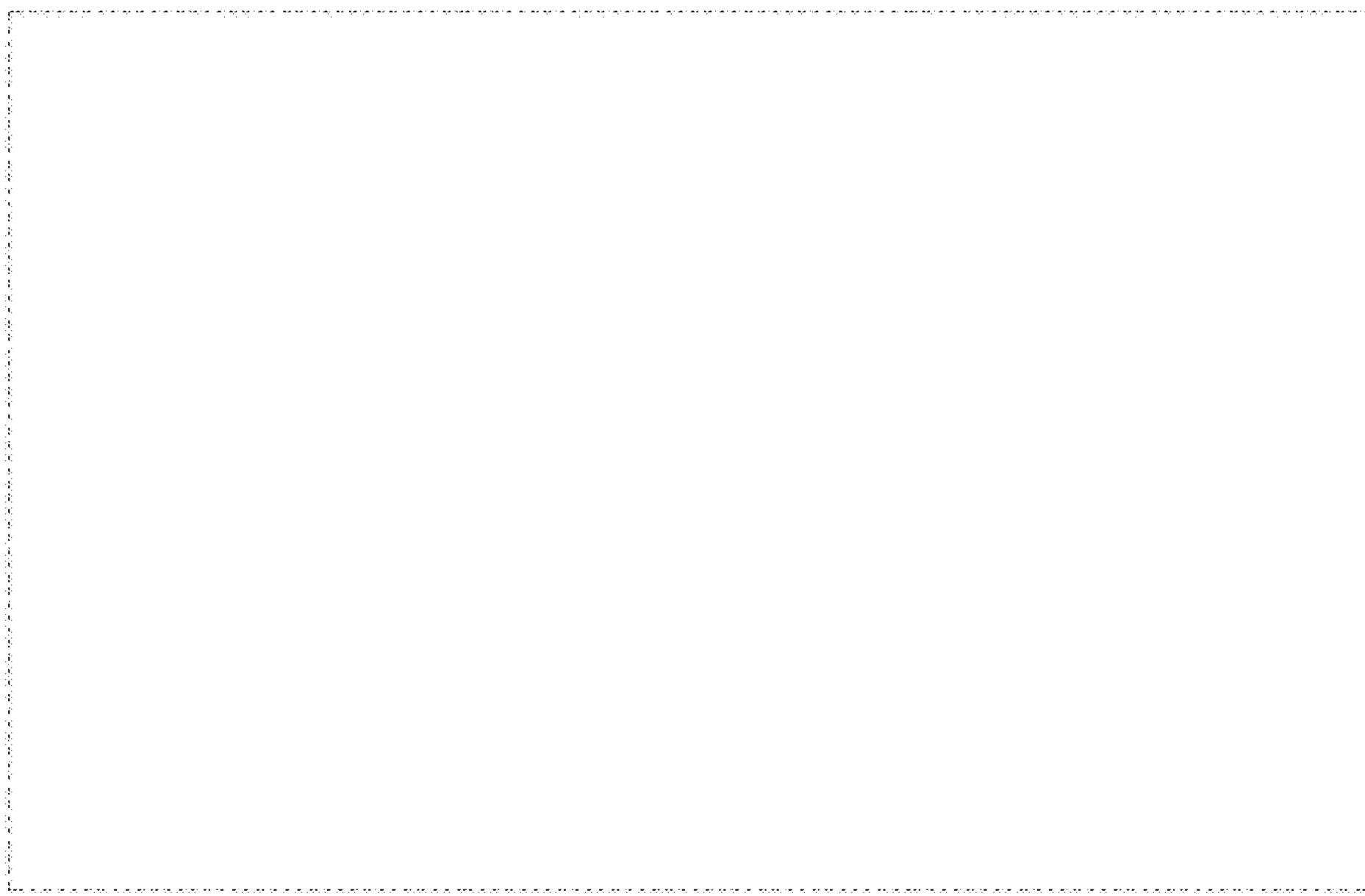

1.12

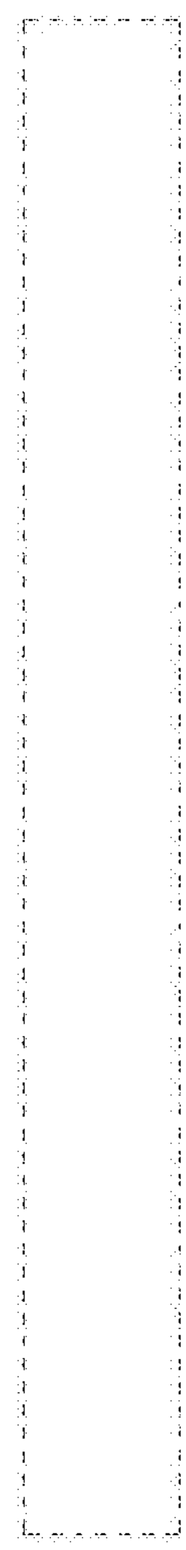

1.13

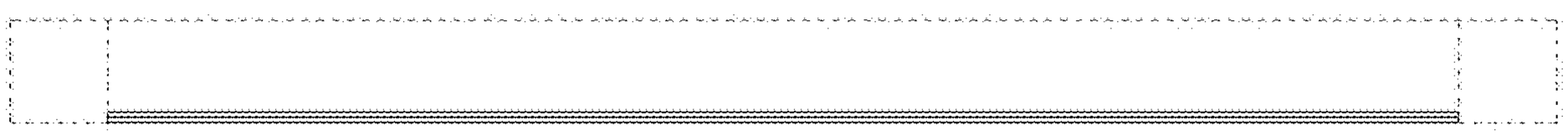

1.14

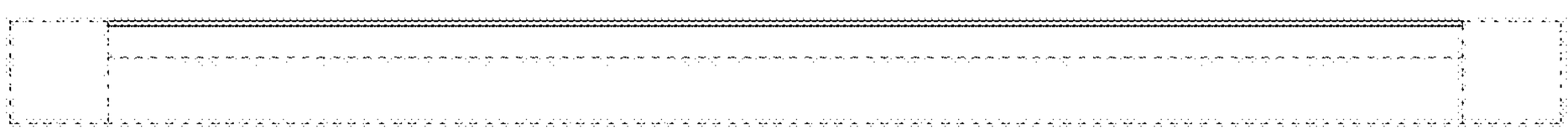

1.15

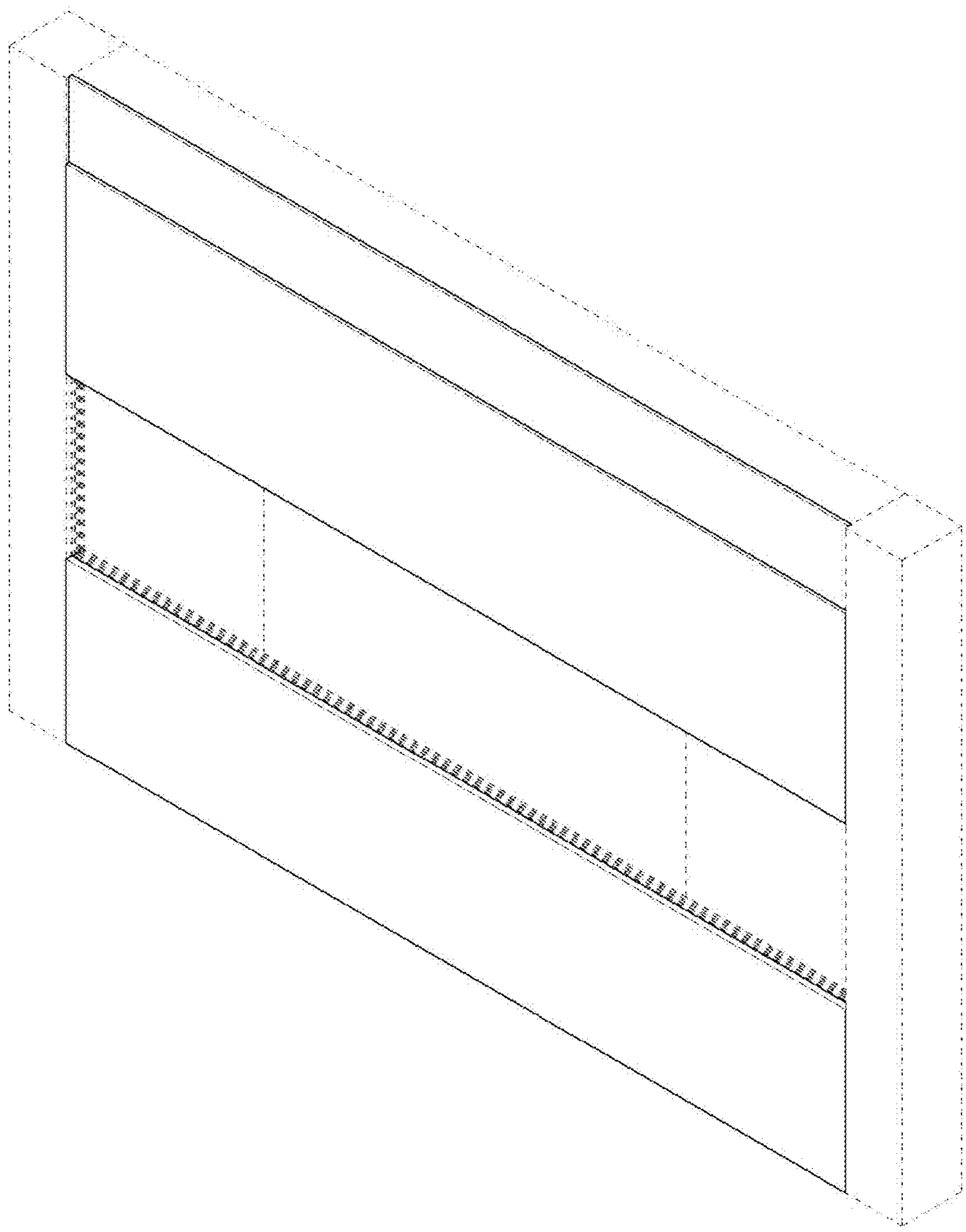

1.16

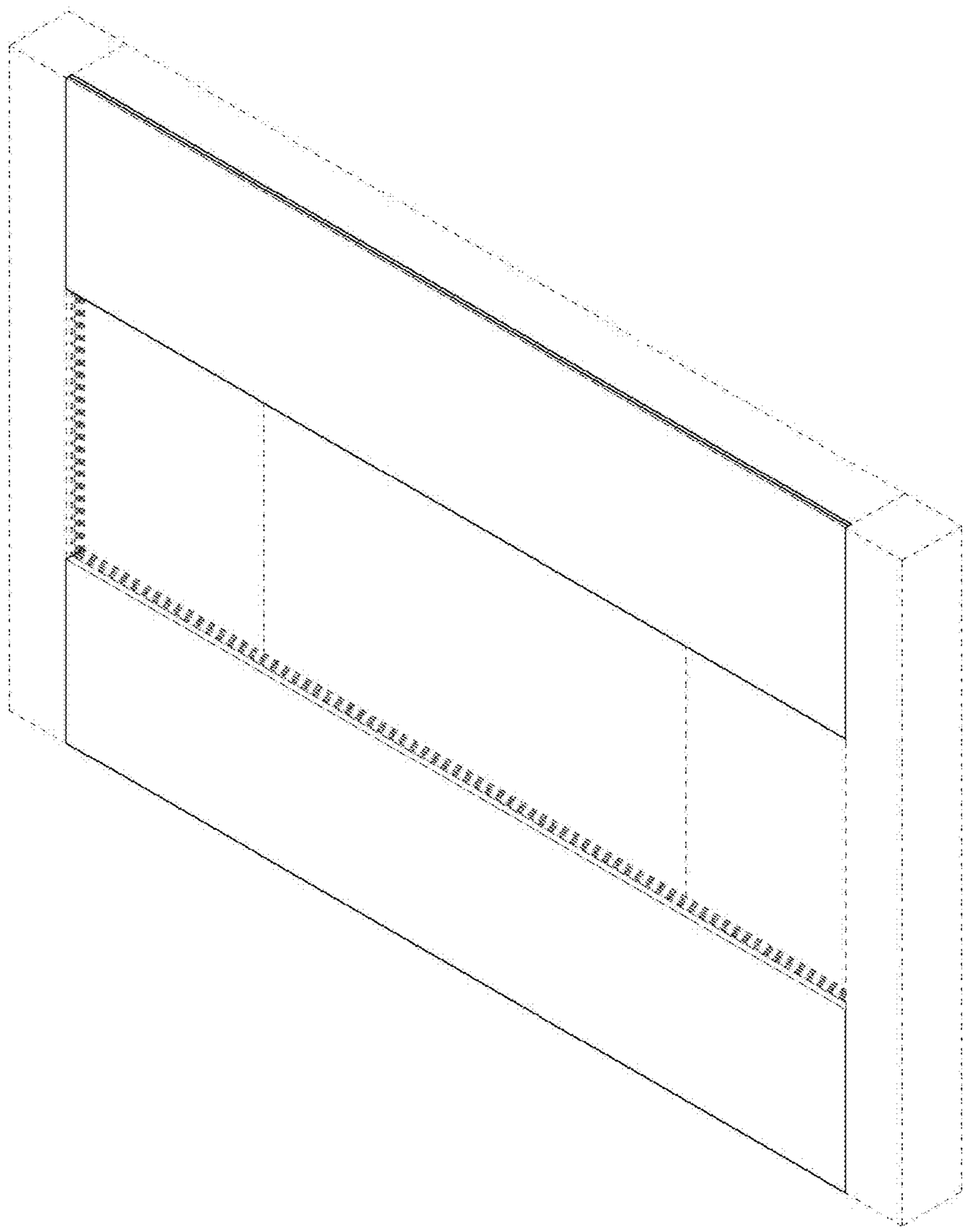

1.17

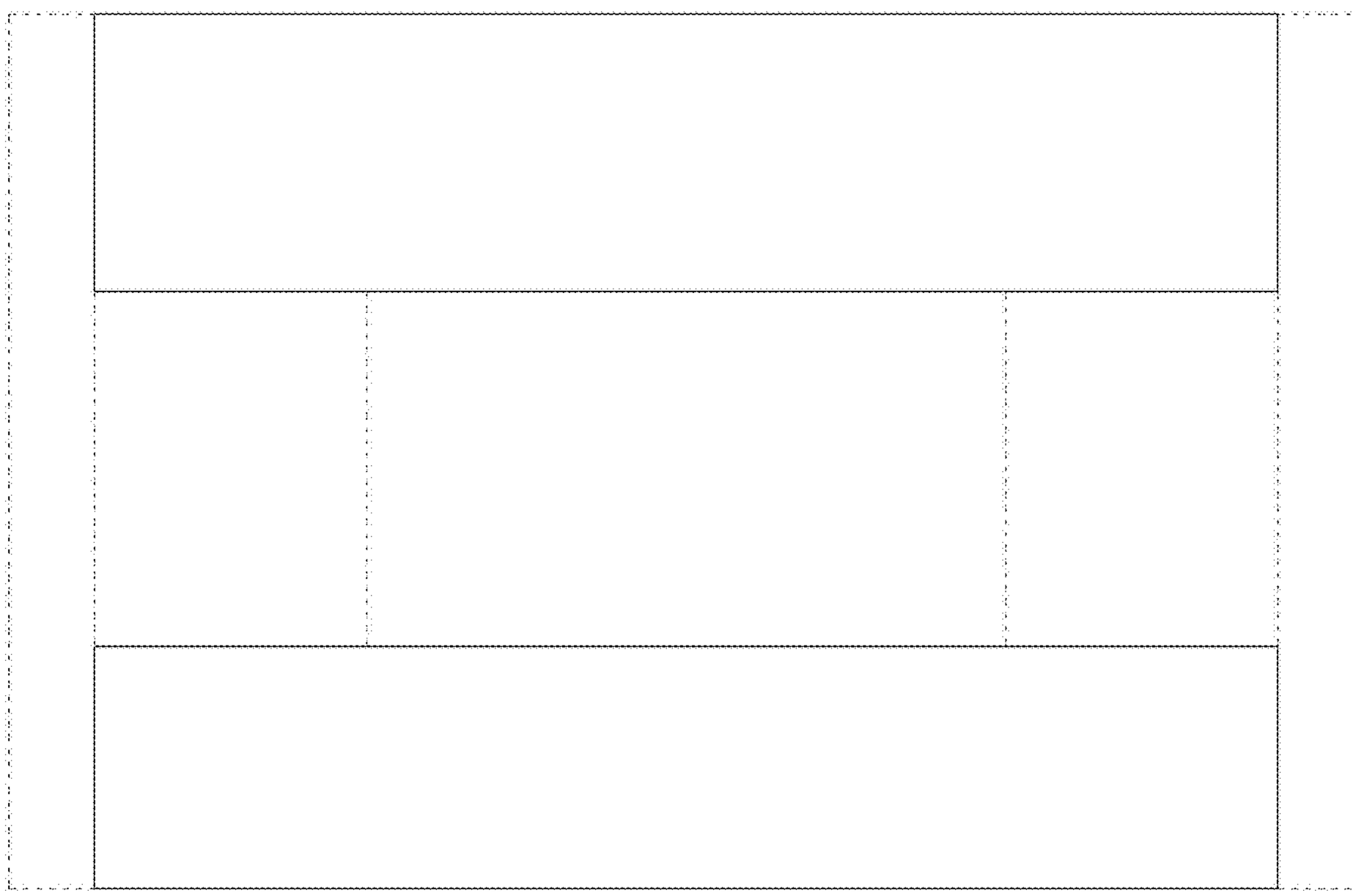

1.18

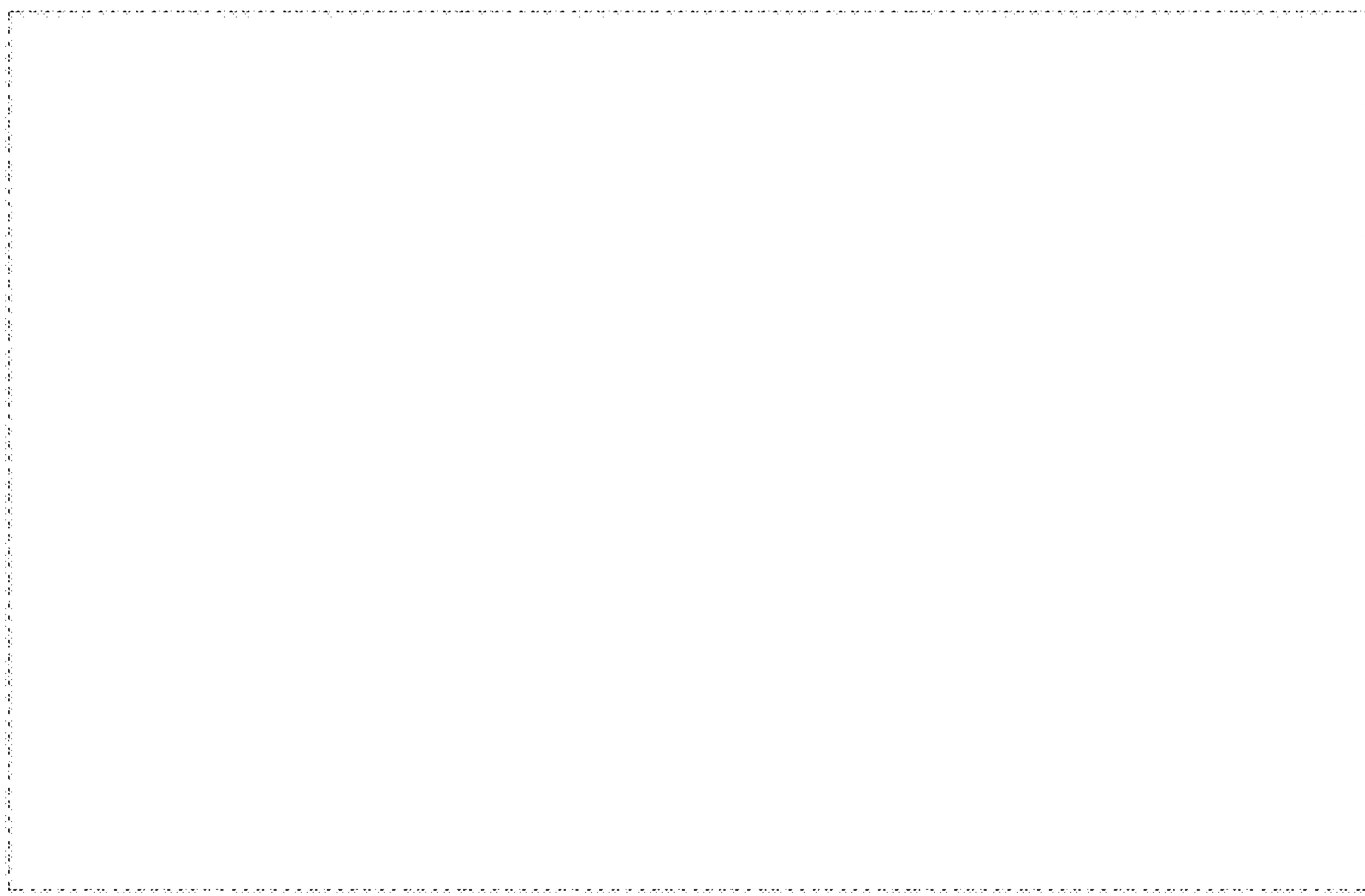

1.19

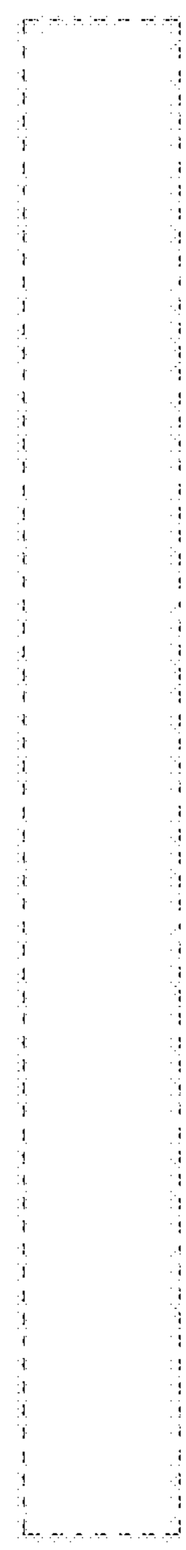

1.20

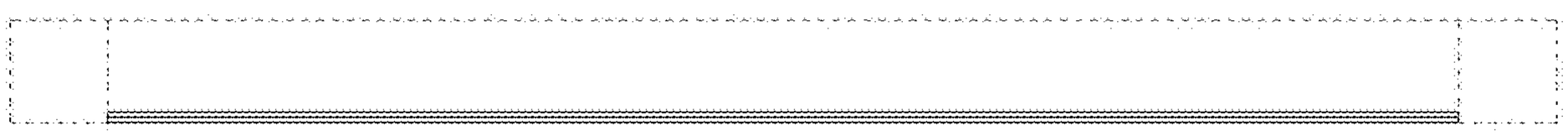

1.21

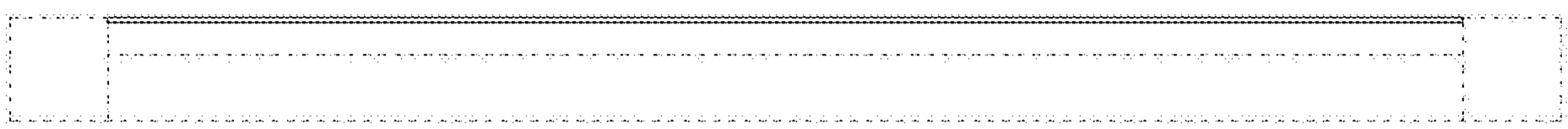

1.22

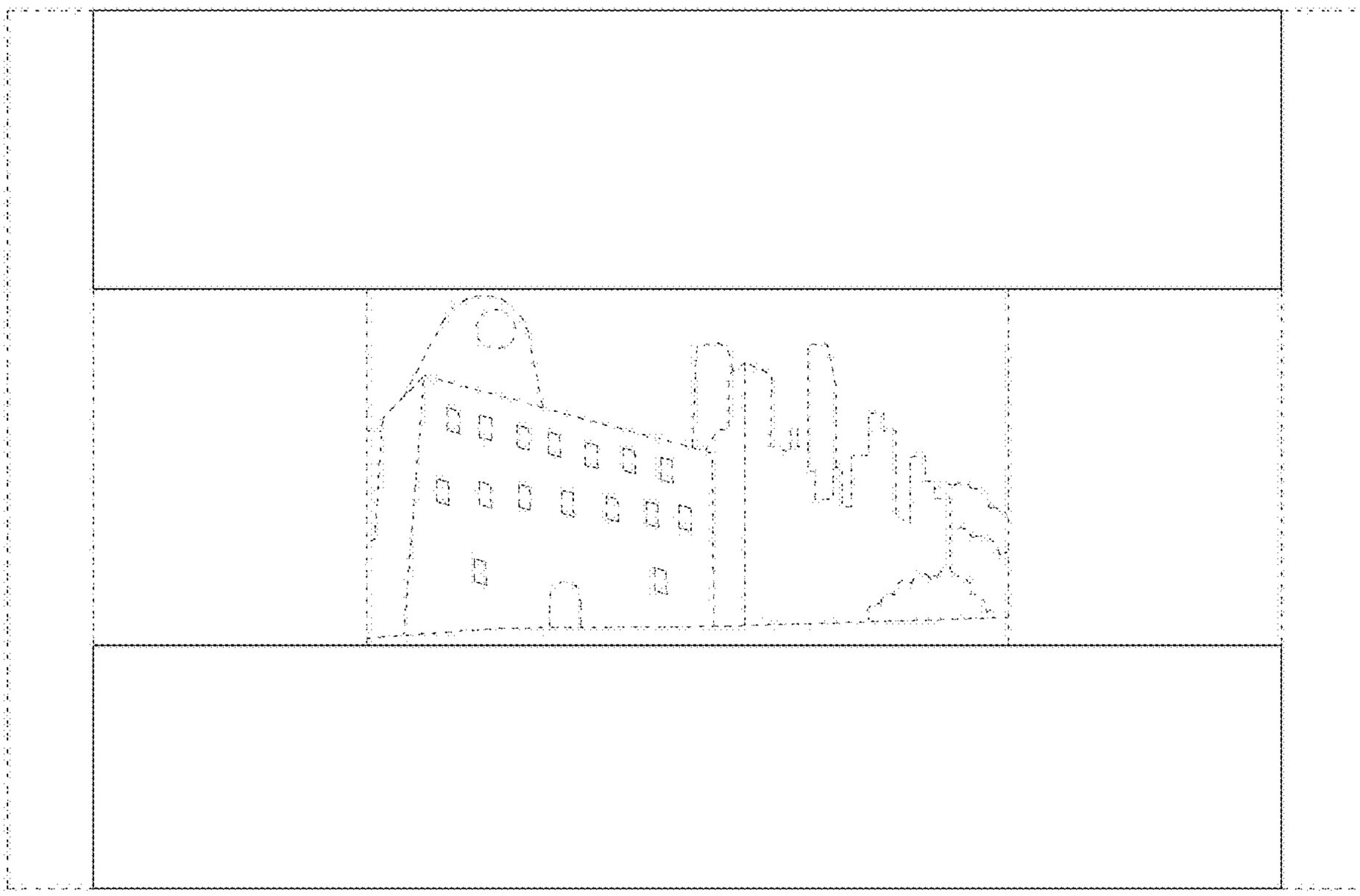

1.23

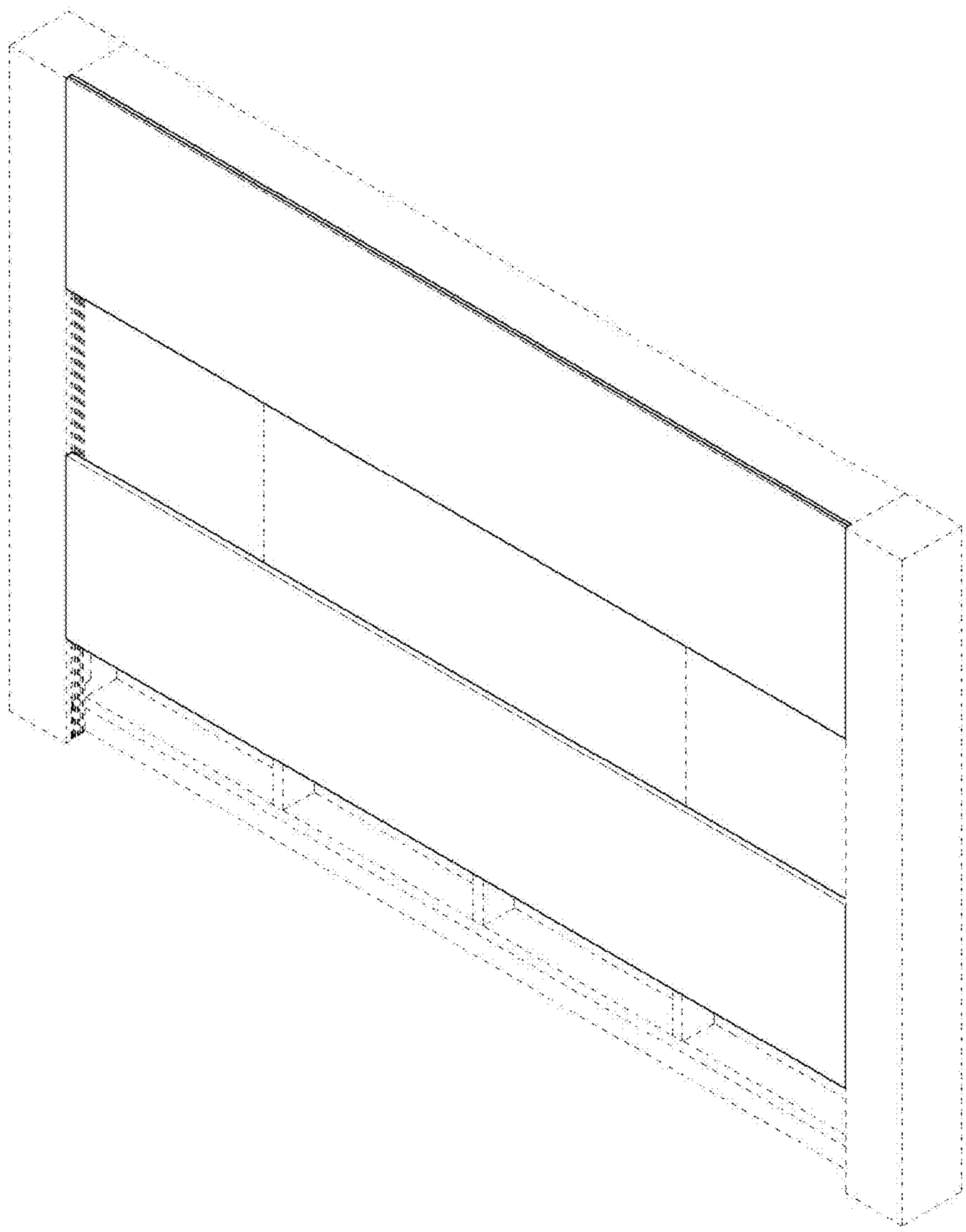

1.24

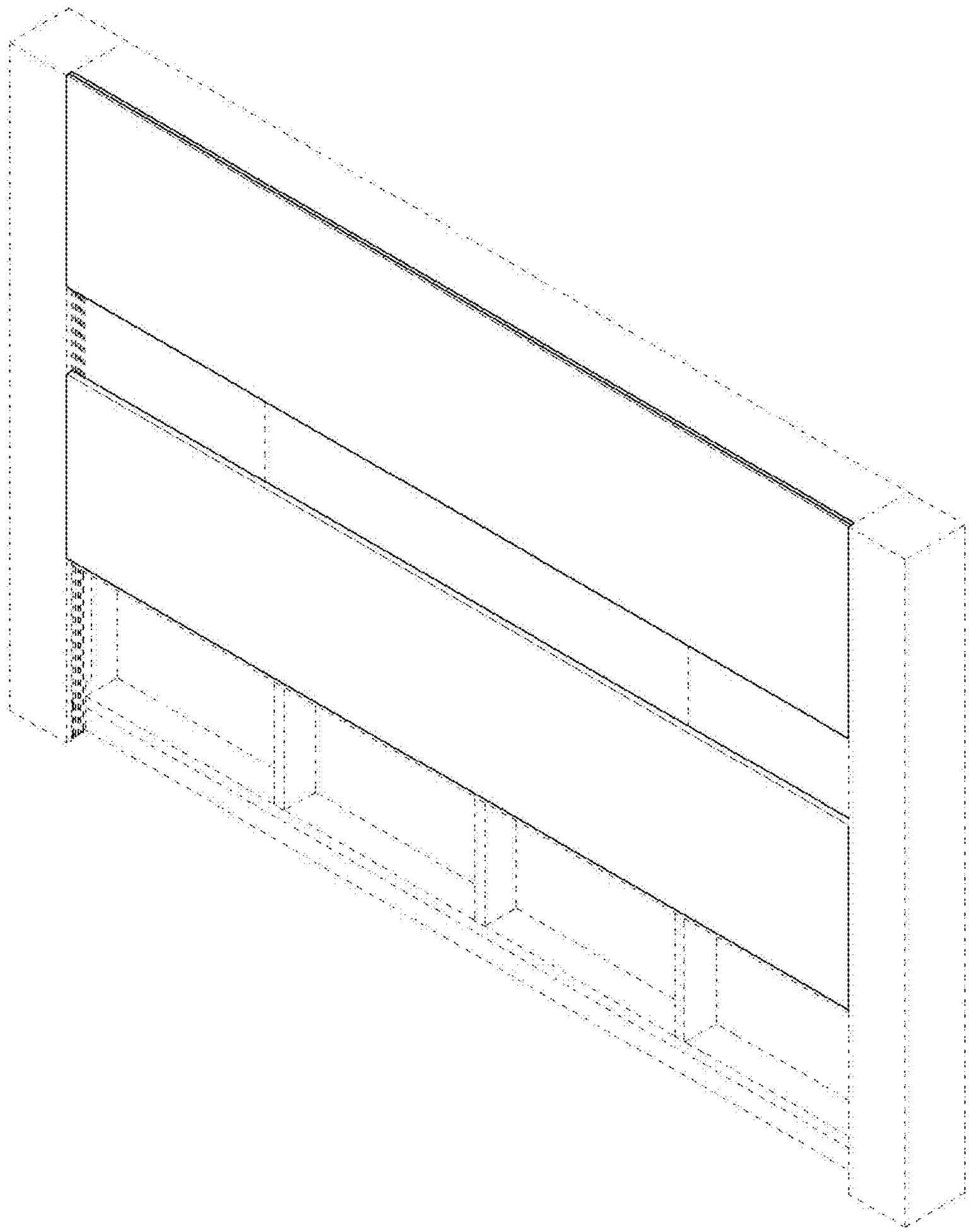

1.25

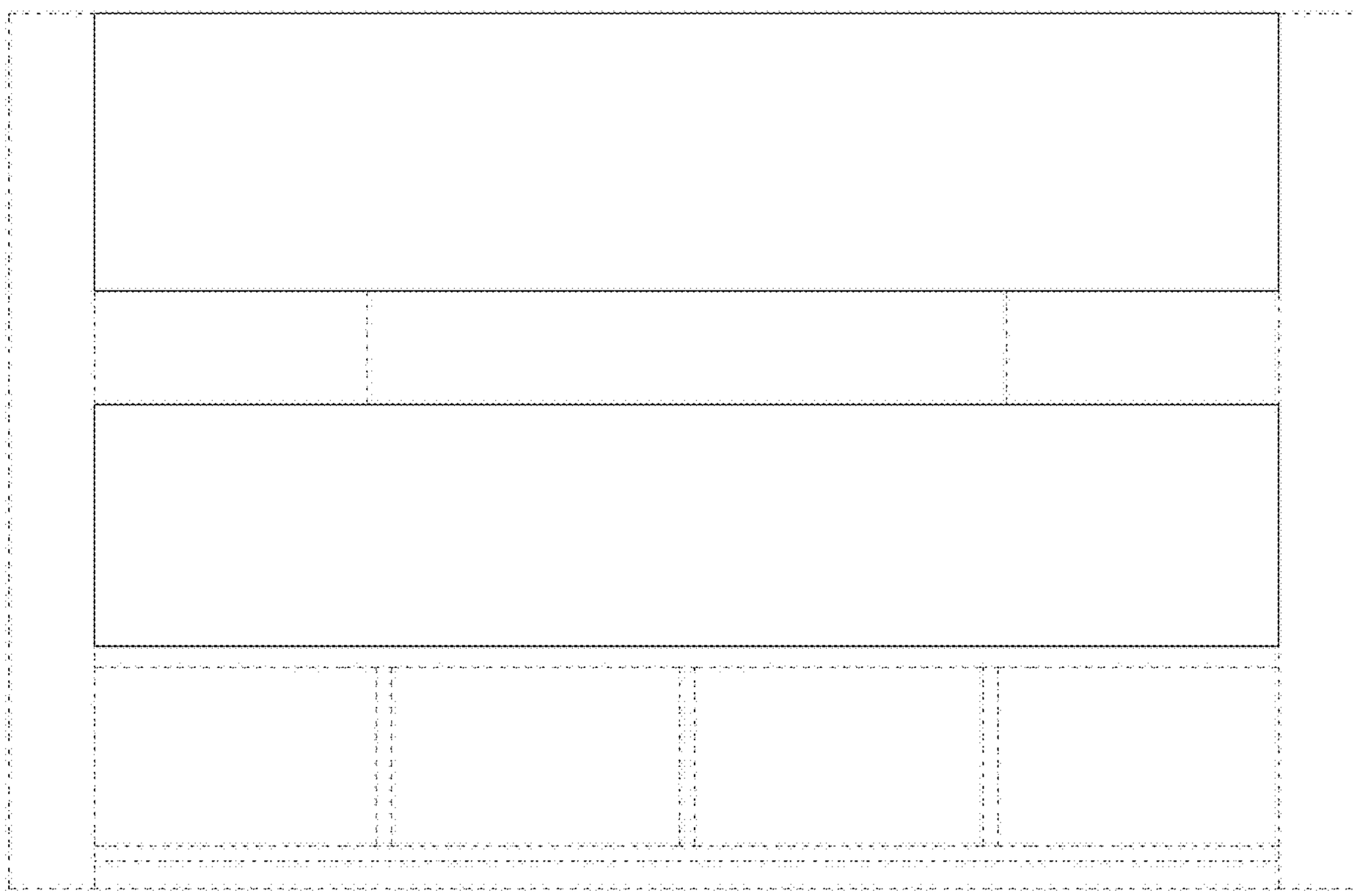

1.26

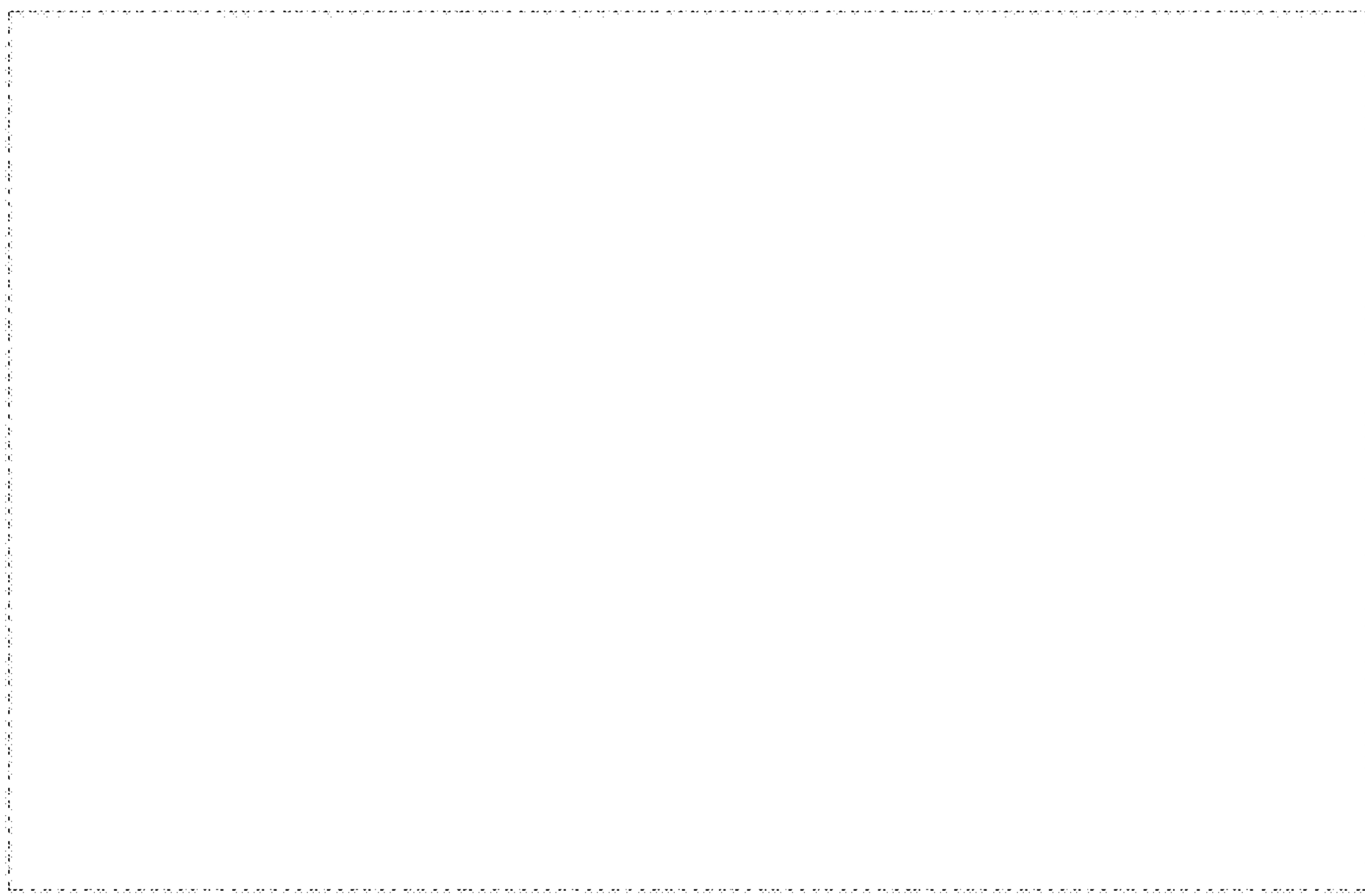

1.27

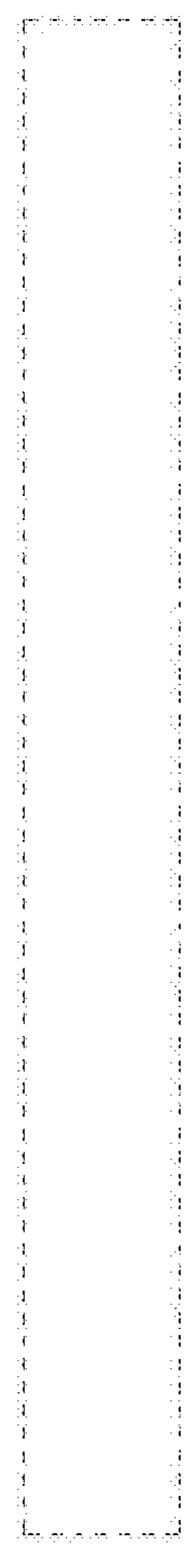

1.28

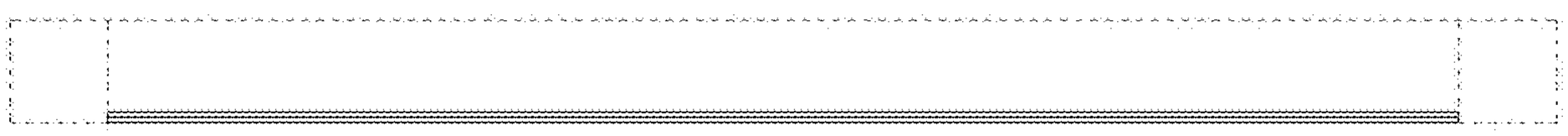
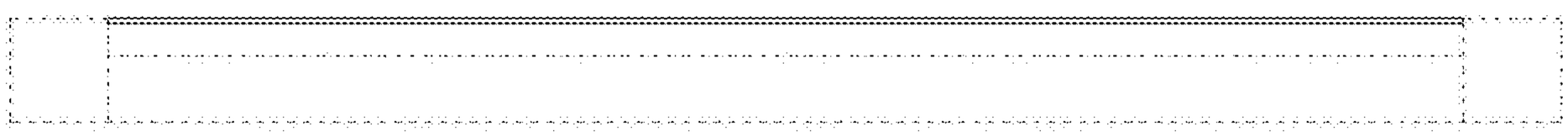
1.29