US00D978694S

(12) United States Design Patent

Weckman et al.

(10) Patent No.: US D978,694 S
(45) Date of Patent: ** Feb. 21, 2023

(54) **SPRAY SENSOR**

(71) Applicant: **Intelligent Agricultural Solutions LLC**, Fargo, ND (US)

(72) Inventors: **Kory Weckman**, Fargo, ND (US); **Dan Bjertness**, Fargo, ND (US); **Ross Eickhoff**, Fargo, ND (US)

(73) Assignee: **Intelligent Agricultural Solutions, LLC**, Fargo, ND (US)

(**) Term: **15 Years**

(21) Appl. No.: **29/800,668**

(22) Filed: **Jul. 22, 2021**

(51) **LOC (14) Cl.** **10-05**

(52) **U.S. Cl.**
USPC **D10/96**

(58) **Field of Classification Search**
USPC D10/40, 85, 96, 97, 99, 101, 102, 103; D13/162; D15/13; D23/206, 233, 235, D23/239, 244, 245; D24/129
CPC . G01F 25/10; G01F 15/14; G01F 1/58; G01F 1/8409; G01F 1/00; G01F 1/3218; G01F 1/26; G01F 23/14; G01F 25/0092; A01G 25/165
See application file for complete search history.

(56) **References Cited**

U.S. PATENT DOCUMENTS

D278,316	S	*	4/1985	Bengtson	D10/96
5,144,767	A		9/1992	McCloy et al.	
D460,526	S	*	7/2002	Weingarten	D23/244
7,502,665	B2		3/2009	Giles et al.	
D604,805	S	*	11/2009	Samborn	D23/233
D682,715	S	*	5/2013	Wang	D10/40
9,532,563	B2		1/2017	Arenson et al.	
D812,504	S	*	3/2018	Headley	D10/96
D832,123	S	*	10/2018	Nakai	D10/96
10,219,506	B2		3/2019	Ni	
D850,960	S	*	6/2019	Headley	D10/96
10,394,209	B2		8/2019	Goodon et al.	
10,624,257	B2		4/2020	Wilger	
D902,061	S	*	11/2020	Dabule	D10/99
D929,544	S	*	8/2021	Okawara	D23/233

OTHER PUBLICATIONS

Office Action from Brazilian Design Patent Application No. 3020220002011, dated May 17, 2022, 4 pages.
"Procedure for Measuring Sprayer Nozzle Wear Rate" from ASAE S471 Mar. 1991 (R2012) Copyright American Society of Agricultural and Biological Engineers, dated Mar. 1991, 4 pages.
"Spray Nozzle Classification by Droplet Spectra" from ANSI/ASAE S572.1 W/Corr. Mar. 1, 2009 (R2013) Copyright American Society of Agricultural and Biological Engineers, dated Mar. 2009, 6 pages.
Product Brochure "Sentry 6140 Tip Flow Monitor", 98-01449-R3, © TeeJet Technologies 2014, 2 pages.

* cited by examiner

Primary Examiner — George D. Kirschbaum
Assistant Examiner — Lillian Windham

(57) **CLAIM**

The ornamental design for a spray sensor, as shown and described.

DESCRIPTION

FIG. **1** is a left front perspective view;
FIG. **2** is a right front perspective view;
FIG. **3** is a right rear perspective view;
FIG. **4** is a left rear perspective view;
FIG. **5** is a top plan view;
FIG. **6** is a bottom plan view;
FIG. **7** is a front elevational view; and,
FIG. **8** is a rear elevational view.
The broken lines shown represent portions of the spray sensor and form no part of the claimed design.

1 Claim, 8 Drawing Sheets

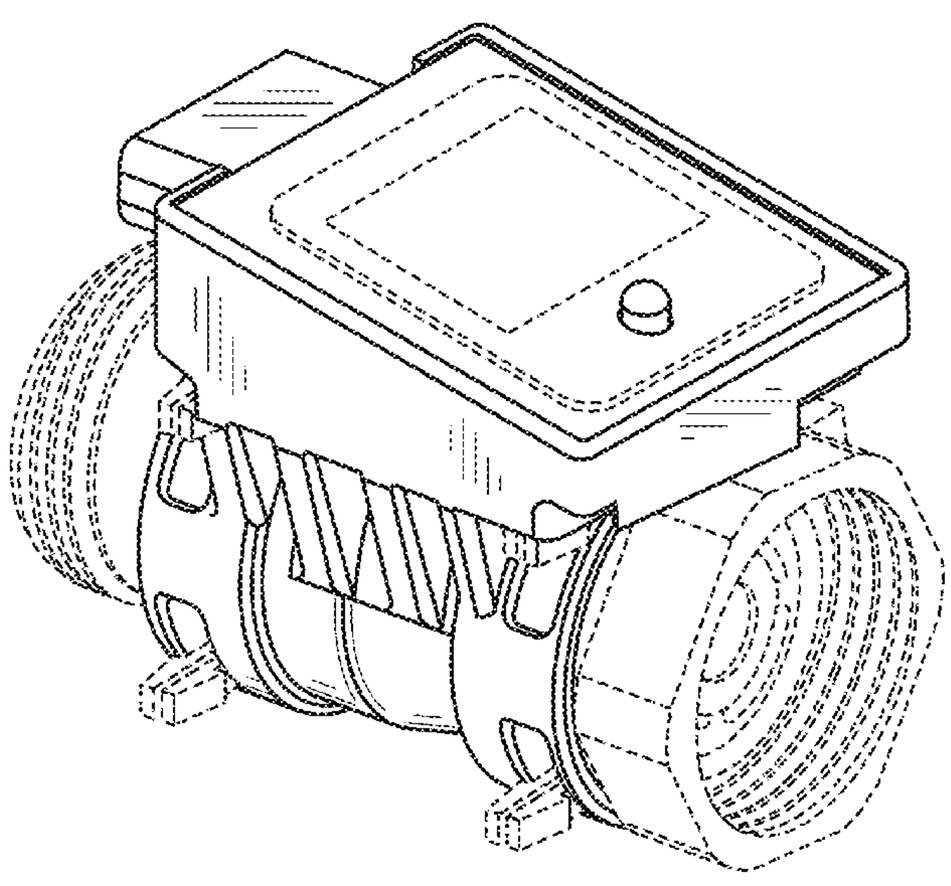

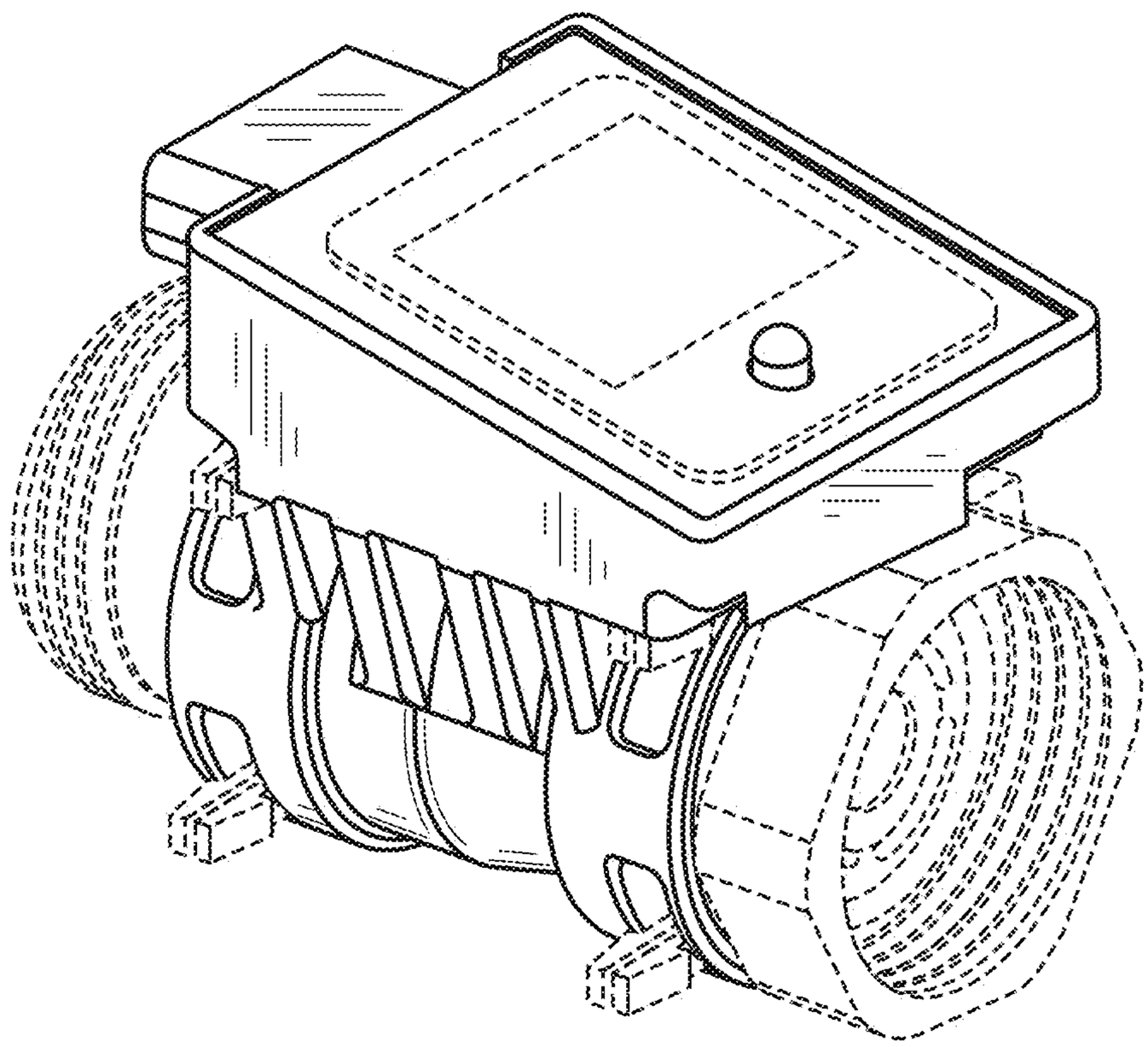

FIG. 1

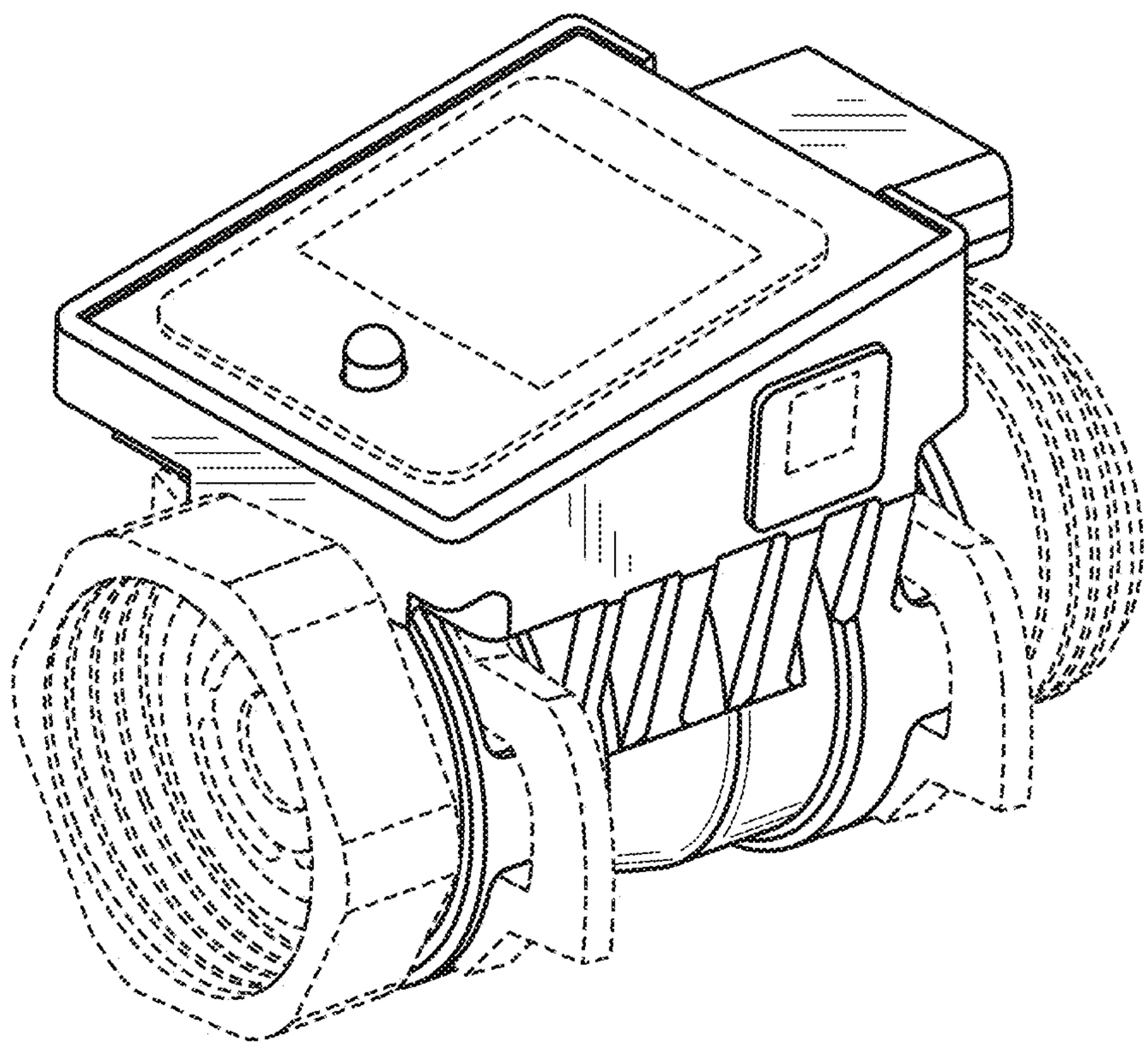

FIG. 2

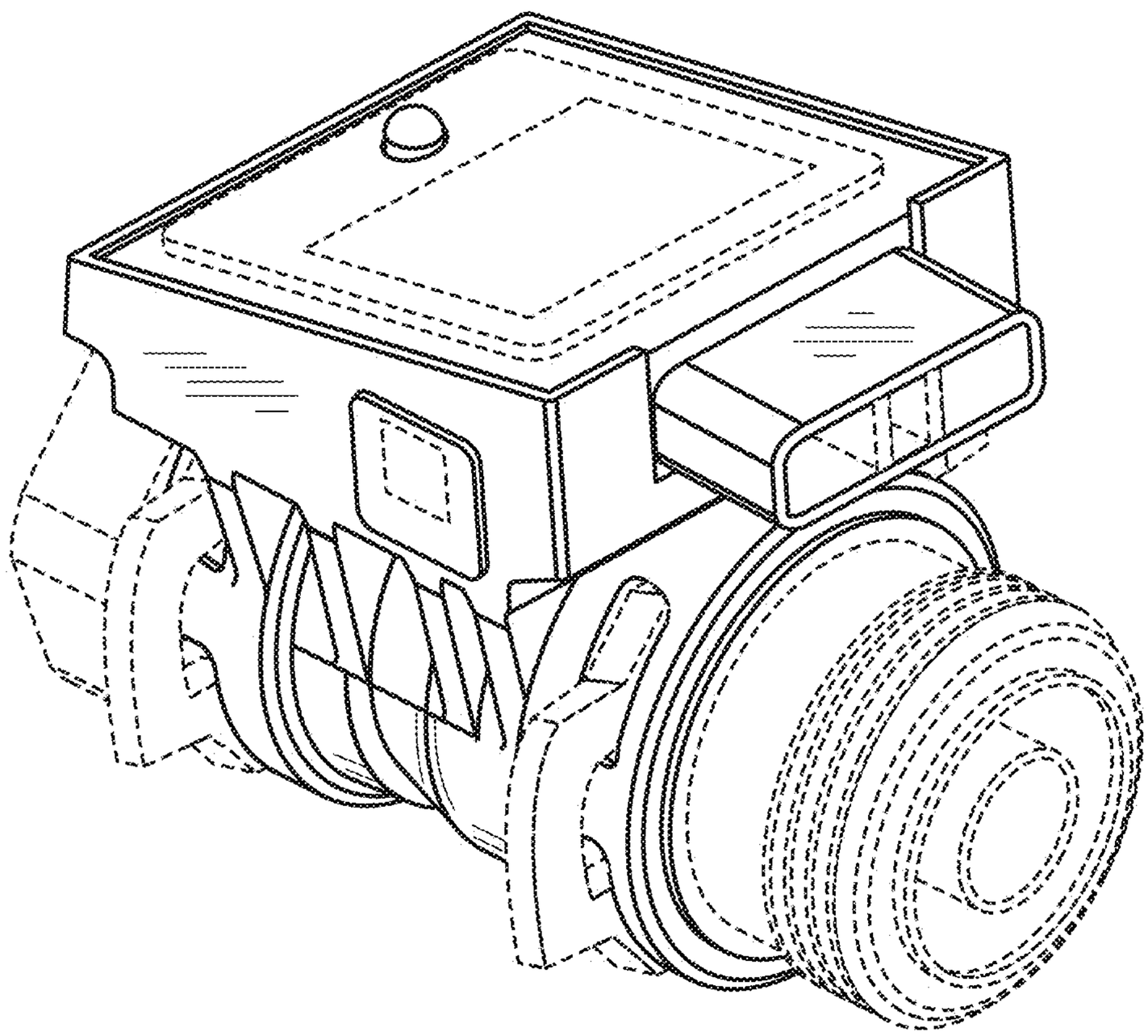

FIG. 3

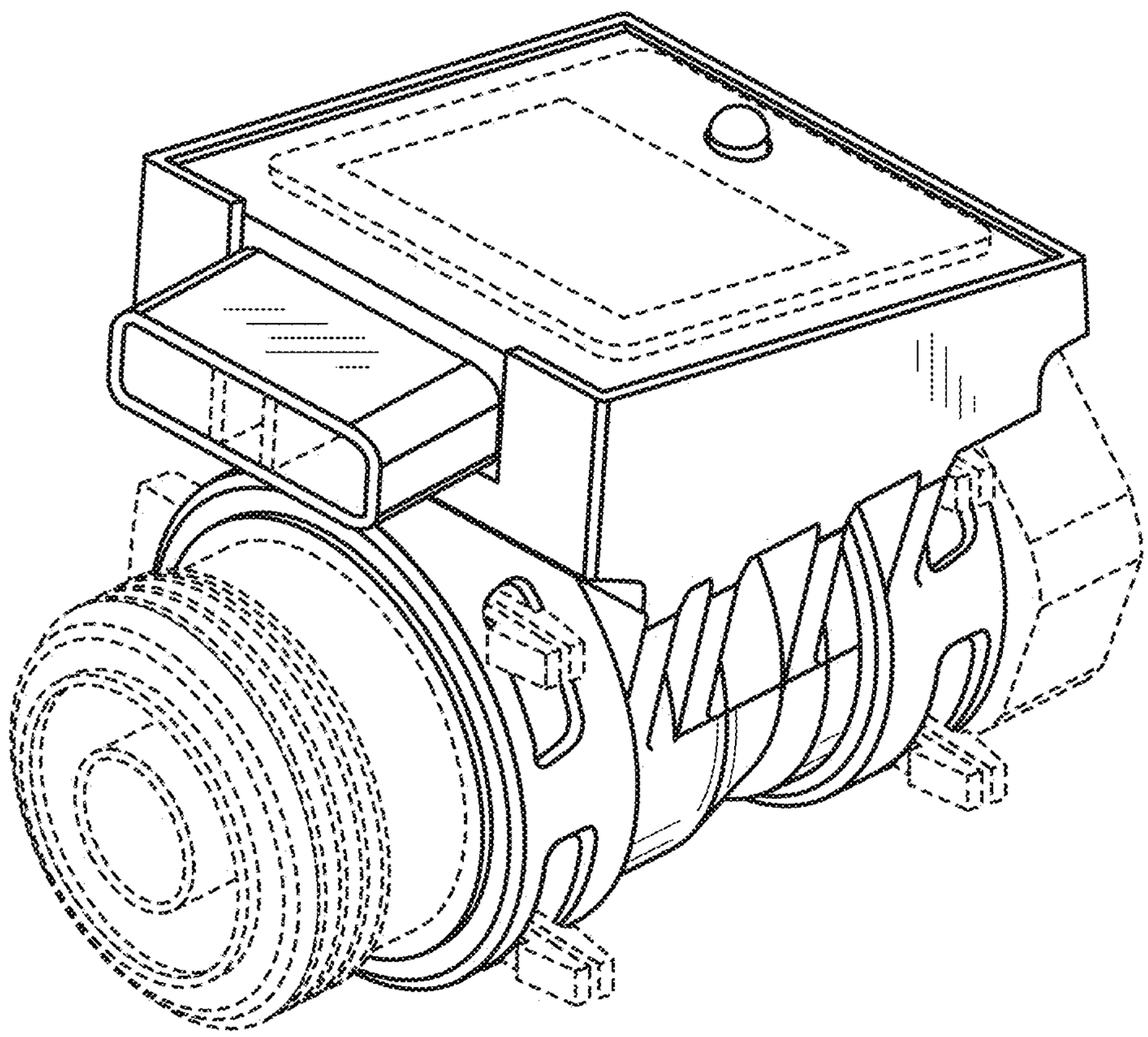

FIG. 4

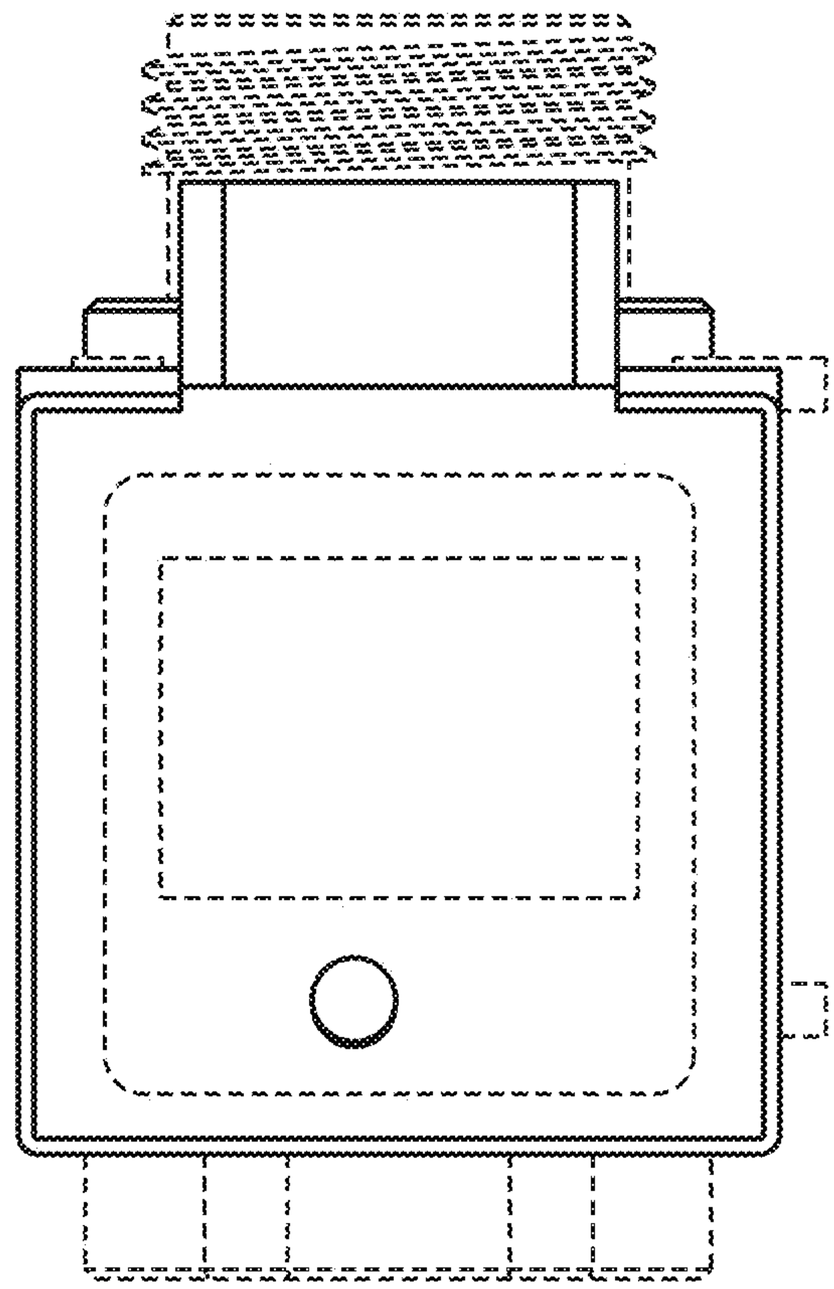

FIG. 5

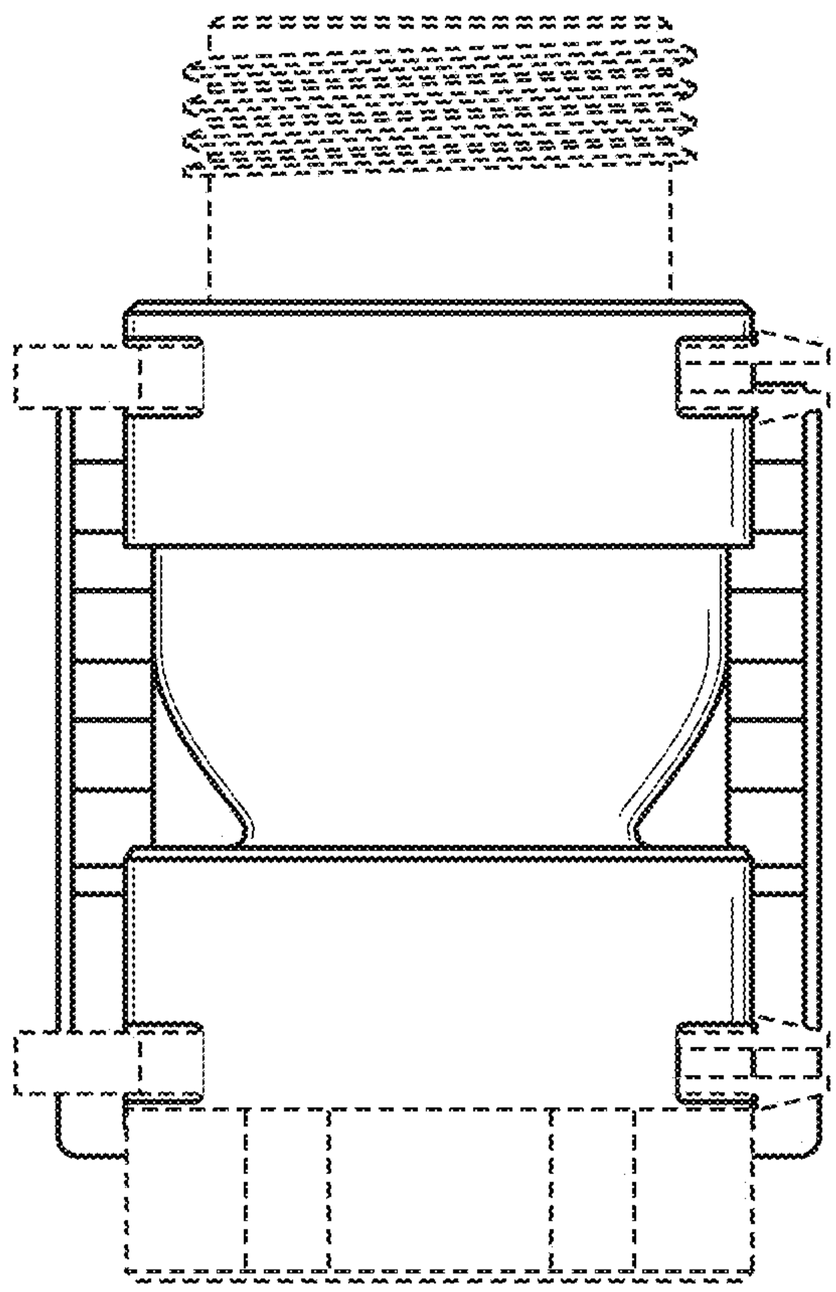

FIG. 6

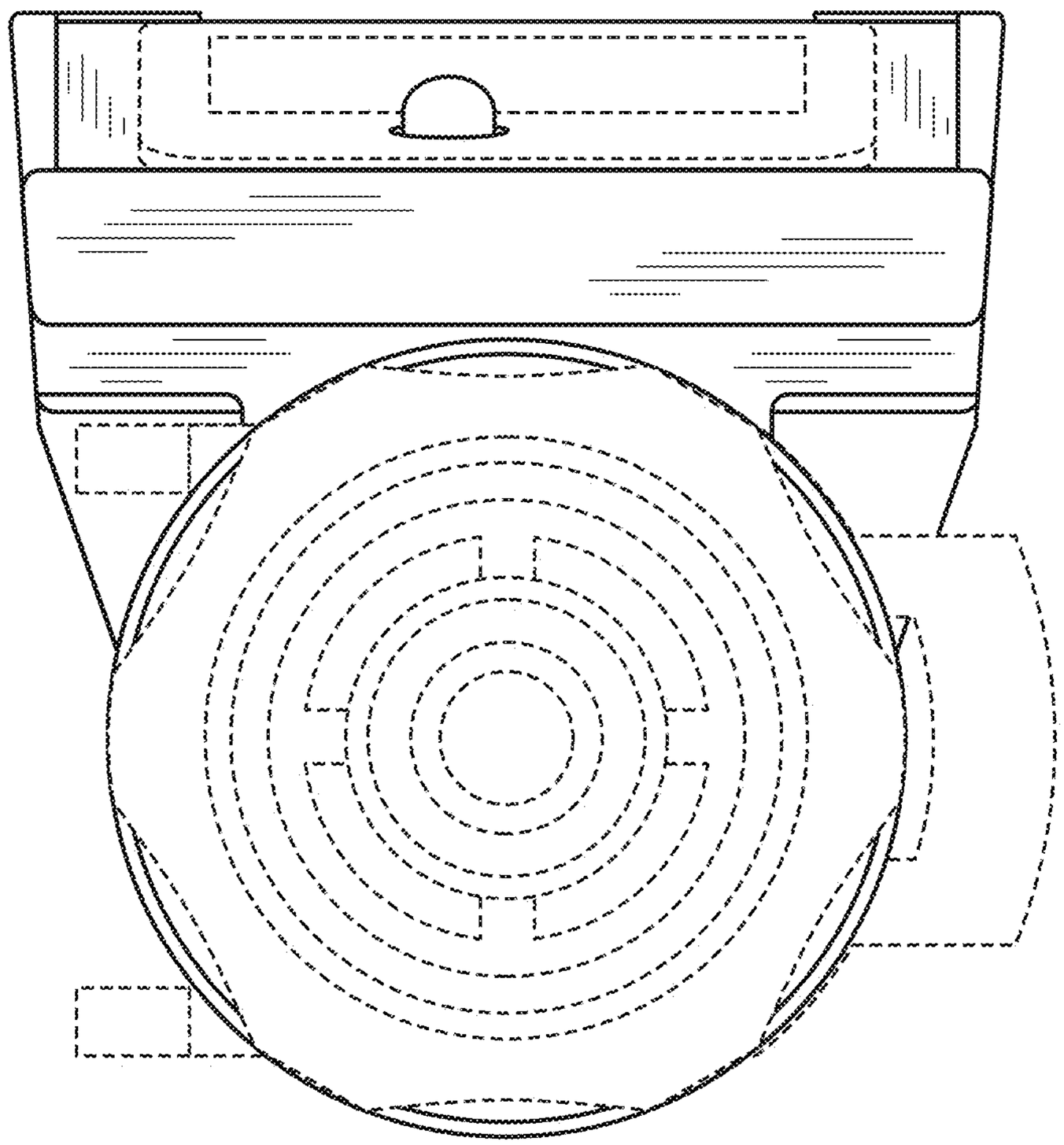

FIG. 7

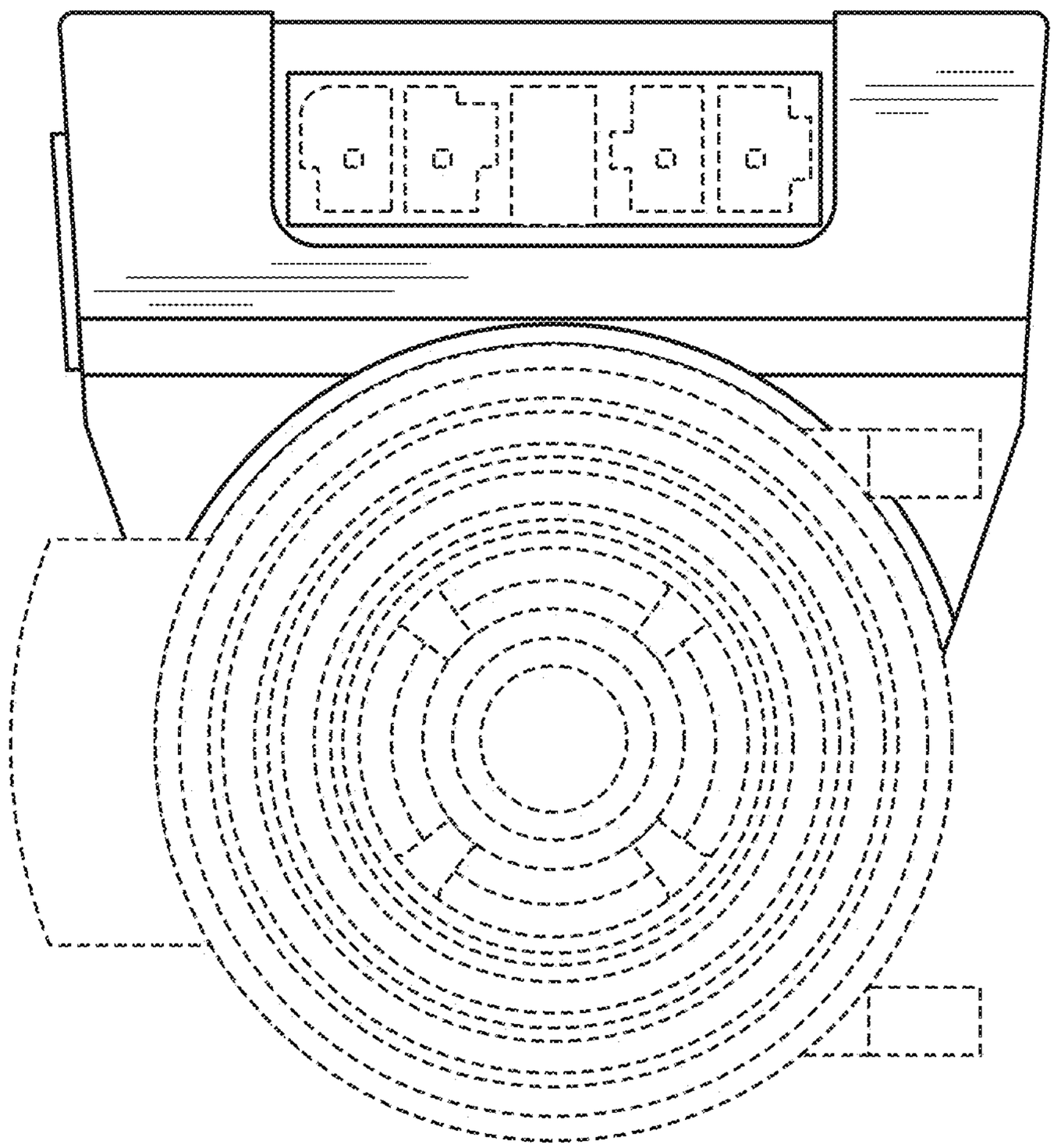

FIG. 8