US00D978120S

(12) United States Design Patent
Castronova

(10) Patent No.: US D978,120 S
(45) Date of Patent: ** Feb. 14, 2023

(54) **WIRELESS ANTENNA SHROUD**

(71) Applicant: **Comptek Technologies, LLC**, Boulder, CO (US)

(72) Inventor: **Dana Anthony Castronova**, Westminster, CO (US)

(73) Assignee: **Comptek Technologies, LLC**, Boulder, CO (US)

(**) Term: **15 Years**

(21) Appl. No.: **29/724,068**

(22) Filed: **Feb. 12, 2020**

(51) **LOC (14) Cl.** **14-03**

(52) **U.S. Cl.**
USPC **D14/230**

(58) **Field of Classification Search**
USPC D14/230–238, 238.1, 243, 299, 358, 217, D14/138; D13/182; D26/26, 72, 74
CPC H01Q 1/243; H01Q 1/36; H01Q 1/38; H01Q 1/50; H01Q 1/12; H01Q 1/40; H01Q 1/42; H01Q 1/00; H01Q 7/00; H01Q 9/0407; H01Q 9/045; H01Q 9/285; H01Q 13/10; H01Q 19/30; H01Q 19/12; H01Q 1/02; H01Q 1/246; H01Q 1/245; H04B 1/034; H04B 1/0475; H04B 2001/0408; H05K 11/00
See application file for complete search history.

(56) **References Cited**

U.S. PATENT DOCUMENTS

3,184,590	A	*	5/1965	Nagel	B60Q 1/2615 362/337
D293,607	S	*	1/1988	Schwartz	D26/26
D333,010	S	*	2/1993	Lowe, Sr.	D26/72
D415,497	S	*	10/1999	Seifert	D14/238
D486,829	S	*	2/2004	Wang	D14/480.5
D486,995	S	*	2/2004	Liu	D7/502
D548,873	S	*	8/2007	Su	D26/85
D642,707	S	*	8/2011	Kang	D26/26
D649,673	S	*	11/2011	Liang	D26/72
D650,506	S	*	12/2011	Kaule	D26/72
D650,507	S	*	12/2011	Osiecki	D26/72
D673,533	S	*	1/2013	Ennabli	D14/230
D728,510	S	*	5/2015	Cai	D14/204
D776,852	S	*	1/2017	Weng	D26/74
10,476,138	B2	*	11/2019	Gonsowski	H01Q 1/02
D888,018	S	*	6/2020	Tompson	D14/217

(Continued)

Primary Examiner — Llorelys Martinez
Assistant Examiner — Kwabena A. Ankobiah
(74) *Attorney, Agent, or Firm* — Russell Manning; FisherBroyles, LLP

(57) **CLAIM**

The ornamental design for a wireless antenna shroud, as shown and described.

DESCRIPTION

FIG. **1** is perspective view of a wireless antenna shroud showing my new design;
FIG. **2** is a front elevational view of the wireless antenna shroud;
FIG. **3** is a rear elevational view of the wireless antenna shroud;
FIG. **4** is a right side elevational view of the wireless antenna shroud, the left side elevational view being a mirror image thereof;
FIG. **5**, is a top elevational view of the wireless antenna shroud, the bottom elevational view being a mirror image thereof; and,
FIG. **6** is a front elevational view of the wireless antenna shroud, shown in an alternate configuration of view.
The broken lines in the drawings illustrate portions of the wireless antenna shroud that form no part of the claimed design. The other broken lines in FIG. **6** represents environmental subject matter only and form no part of the claimed design.

1 Claim, 6 Drawing Sheets

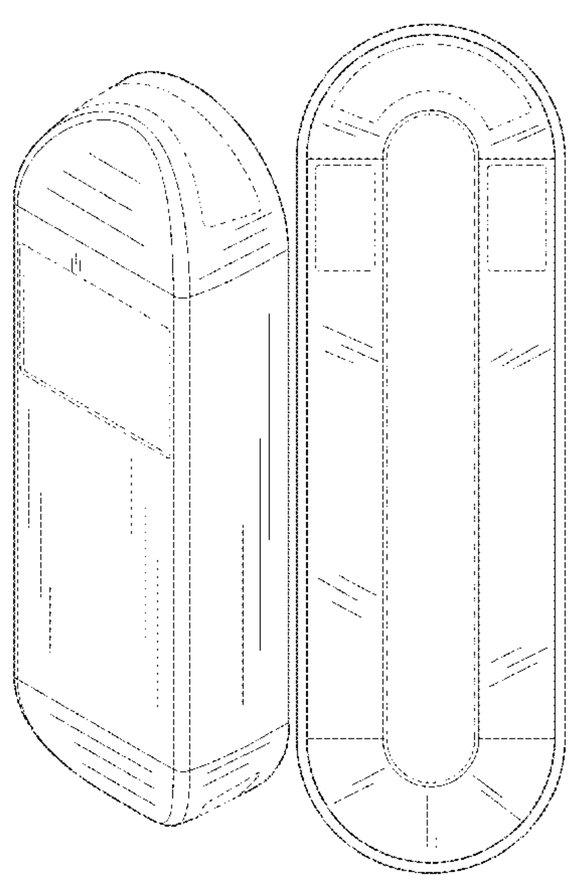

(56) **References Cited**

U.S. PATENT DOCUMENTS

D888,696	S	*	6/2020	Carson	D14/230
D890,135	S	*	7/2020	Tompson	D14/217
D909,349	S	*	2/2021	Kentley-Klay	D14/230
D922,824	S	*	6/2021	Wiens	D7/502
D923,210	S	*	6/2021	Tan	D26/26
D923,211	S	*	6/2021	Zhang	D26/26
D934,092	S	*	10/2021	Luebeck	D10/104.1
D936,640	S	*	11/2021	Elwood	D14/230
D937,464	S	*	11/2021	Zou	D26/85
D938,074	S	*	12/2021	He	D26/26

* cited by examiner

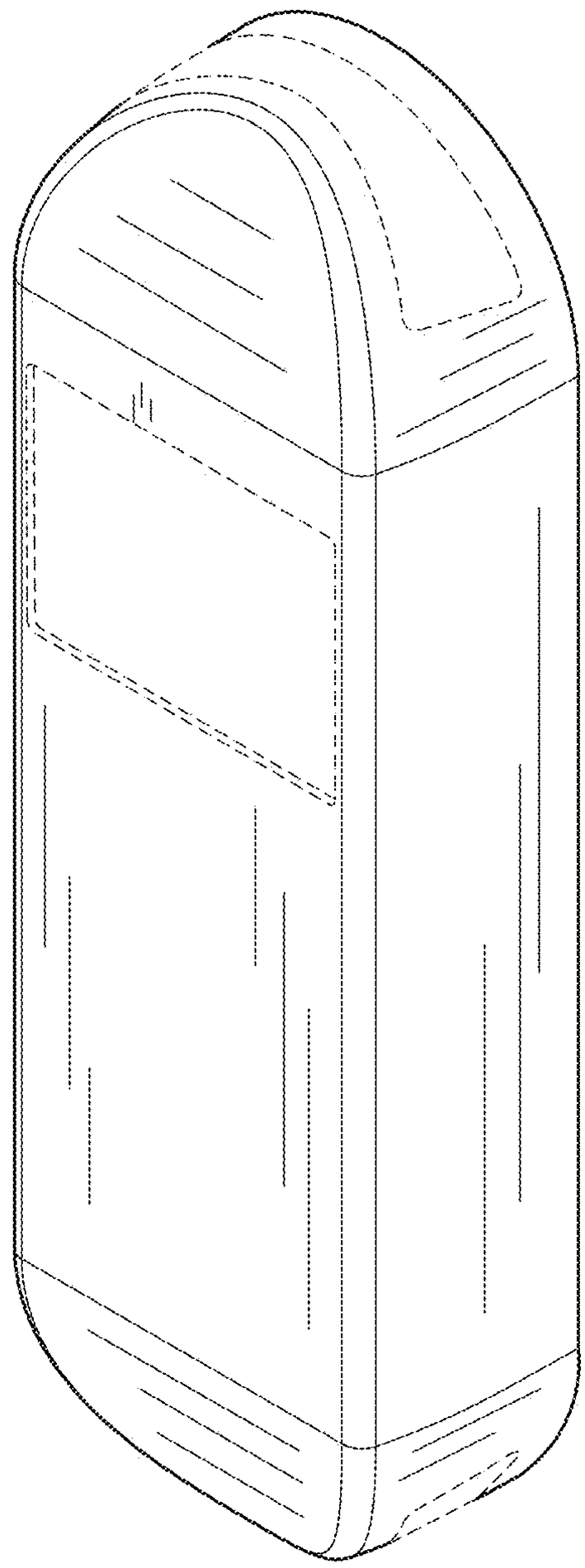

FIG. 1

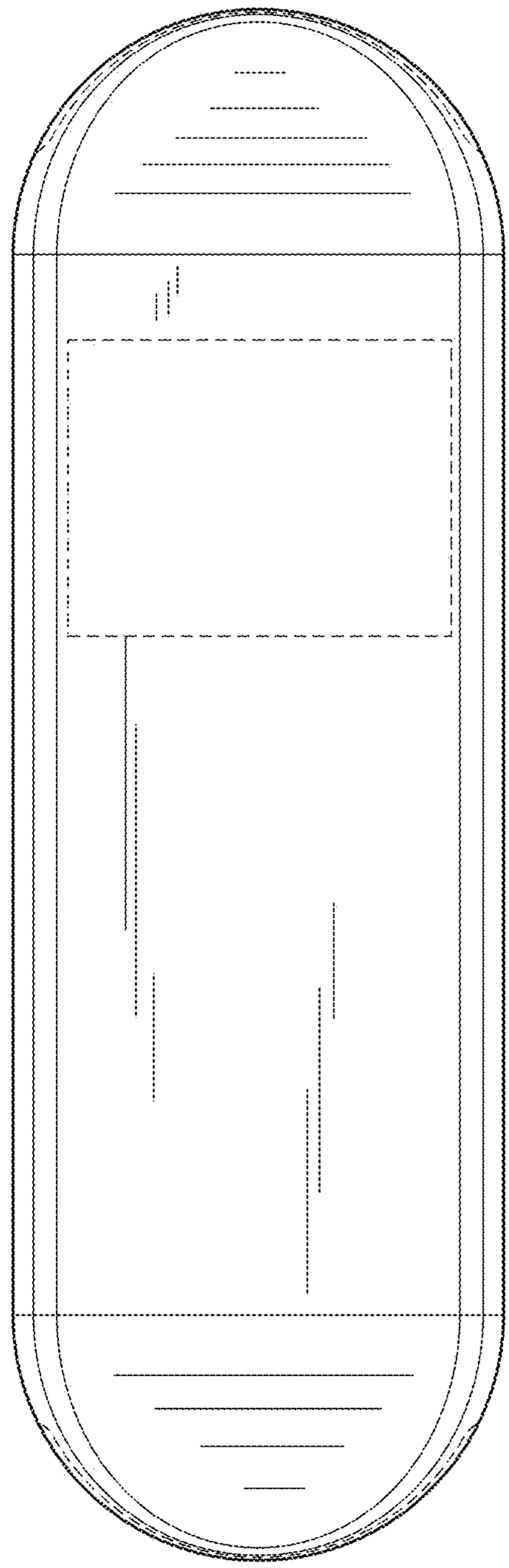

FIG.2

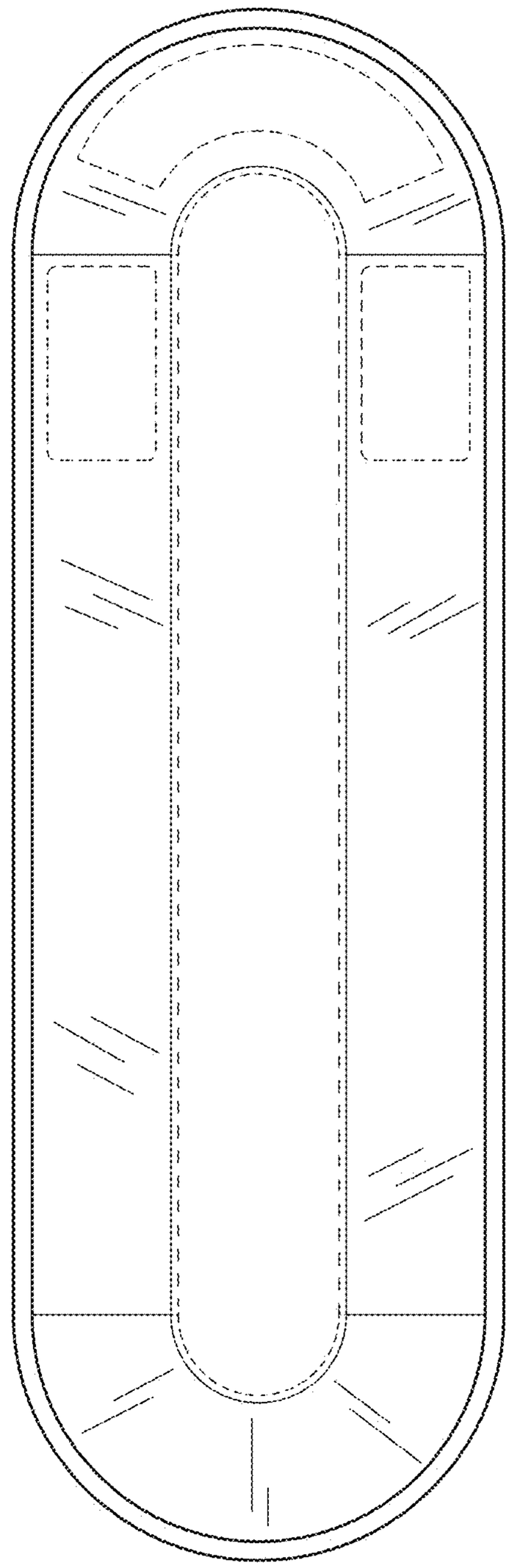

FIG.3

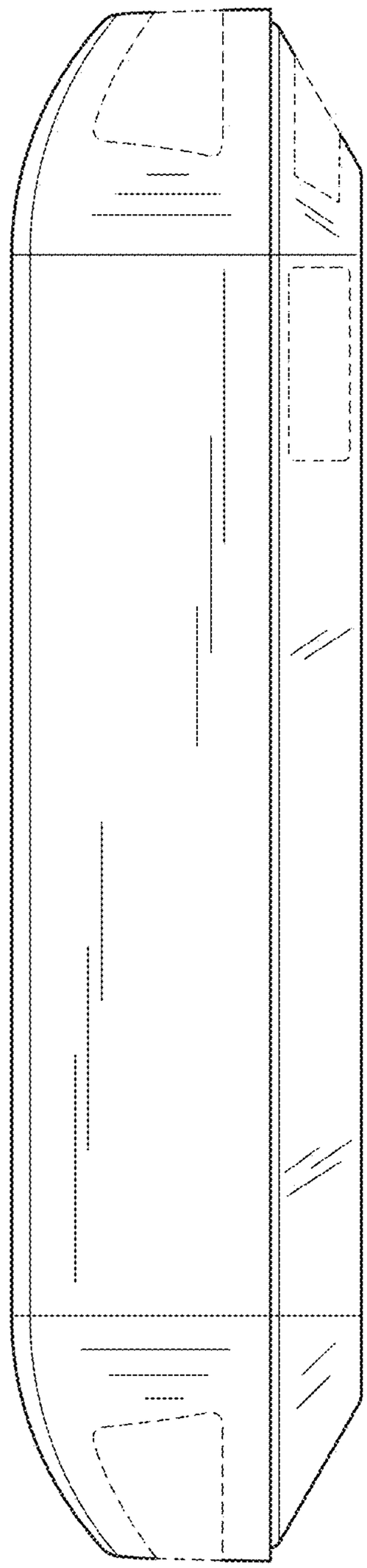

FIG.4

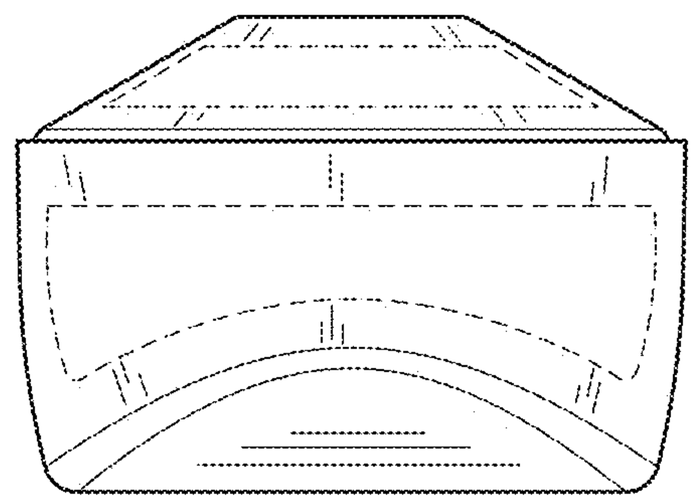

FIG.5

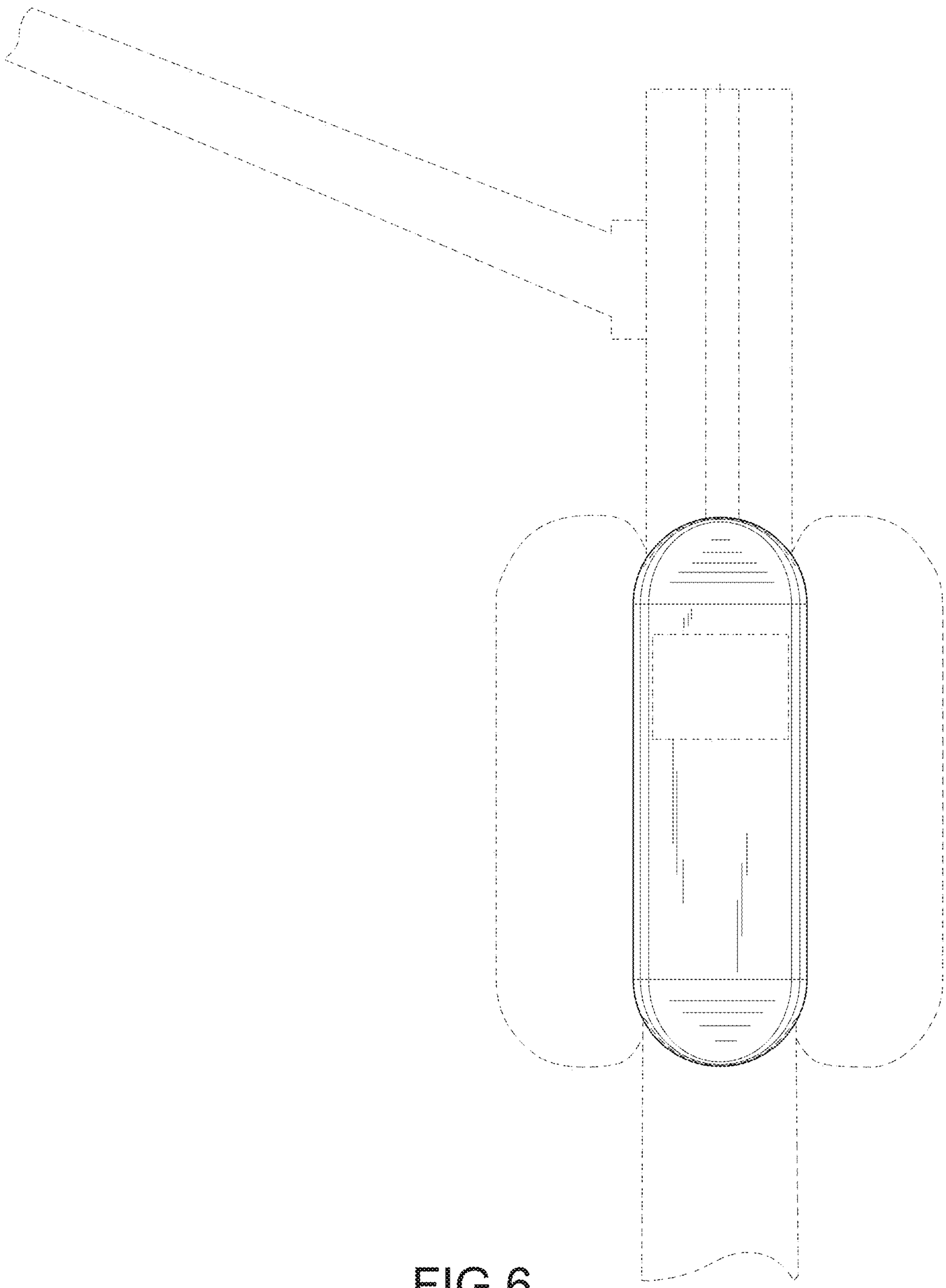

FIG.6