US00D977833S

(12) United States Design Patent

Yang

(10) Patent No.: US D977,833 S
(45) Date of Patent: ** Feb. 14, 2023

(54) **FISHING BOX**

(71) Applicant: **Quanzhou HG Electronics Development Co., Ltd.**, Fujian (CN)

(72) Inventor: **Haijun Yang**, Fujian (CN)

(**) Term: **15 Years**

(21) Appl. No.: **29/691,236**

(22) Filed: **May 15, 2019**

(51) **LOC (14) Cl.** **03-01**

(52) **U.S. Cl.**
USPC **D3/260**; D7/605

(58) **Field of Classification Search**
USPC D3/260, 272, 276, 279, 294, 905; D7/605
CPC F25D 3/06; F25D 3/08; F25D 2400/38
See application file for complete search history.

(56) **References Cited**

U.S. PATENT DOCUMENTS

7,984,997	B1 *	7/2011	Sandberg	B65D 85/72	362/276
D767,277	S *	9/2016	Faibish	D3/905	
D804,819	S *	12/2017	Faibish	D3/905	
D869,244	S *	12/2019	Ellison	D7/605	
D899,869	S *	10/2020	Bullock	B65D 81/3823	D7/605
D904,128	S *	12/2020	Ellison	D7/605	
D922,065	S *	6/2021	Yang	D3/260	
D922,148	S *	6/2021	Yang	D7/605	
D927,939	S *	8/2021	Ellison	D7/605	
D929,189	S *	8/2021	Pennington	D7/605	
D942,812	S *	2/2022	Luo	D7/605	
D948,292	S *	4/2022	Deng	D7/605	
D964,110	S *	9/2022	Ellison	D7/605	
2007/0284377	A1 *	12/2007	Chandler	A63B 69/0068	273/338
2012/0132657	A1 *	5/2012	Seiders	E05B 1/0053	220/592.2
2014/0197059	A1 *	7/2014	Evans	B25H 3/02	206/349
2015/0101498	A1 *	4/2015	Ernst	F25D 23/12	100/102
2022/0289462	A1 *	9/2022	Papera	B62B 1/208	

* cited by examiner

Primary Examiner — W. A. Teddy Falloway
(74) *Attorney, Agent, or Firm* — Prakash Nama; Global IP Services, PLLC

(57) **CLAIM**

The ornamental design for a fishing box, as shown.

DESCRIPTION

FIG. **1** is a front elevational view of a fishing box showing my new design;
FIG. **2** is a rear elevational view thereof;
FIG. **3** is a left side view thereof;
FIG. **4** is a right side view thereof;
FIG. **5** is a top plan view thereof;
FIG. **6** is a bottom plan view thereof;
FIG. **7** is a perspective view thereof; and,
FIG. **8** is another perspective view thereof.

1 Claim, 8 Drawing Sheets

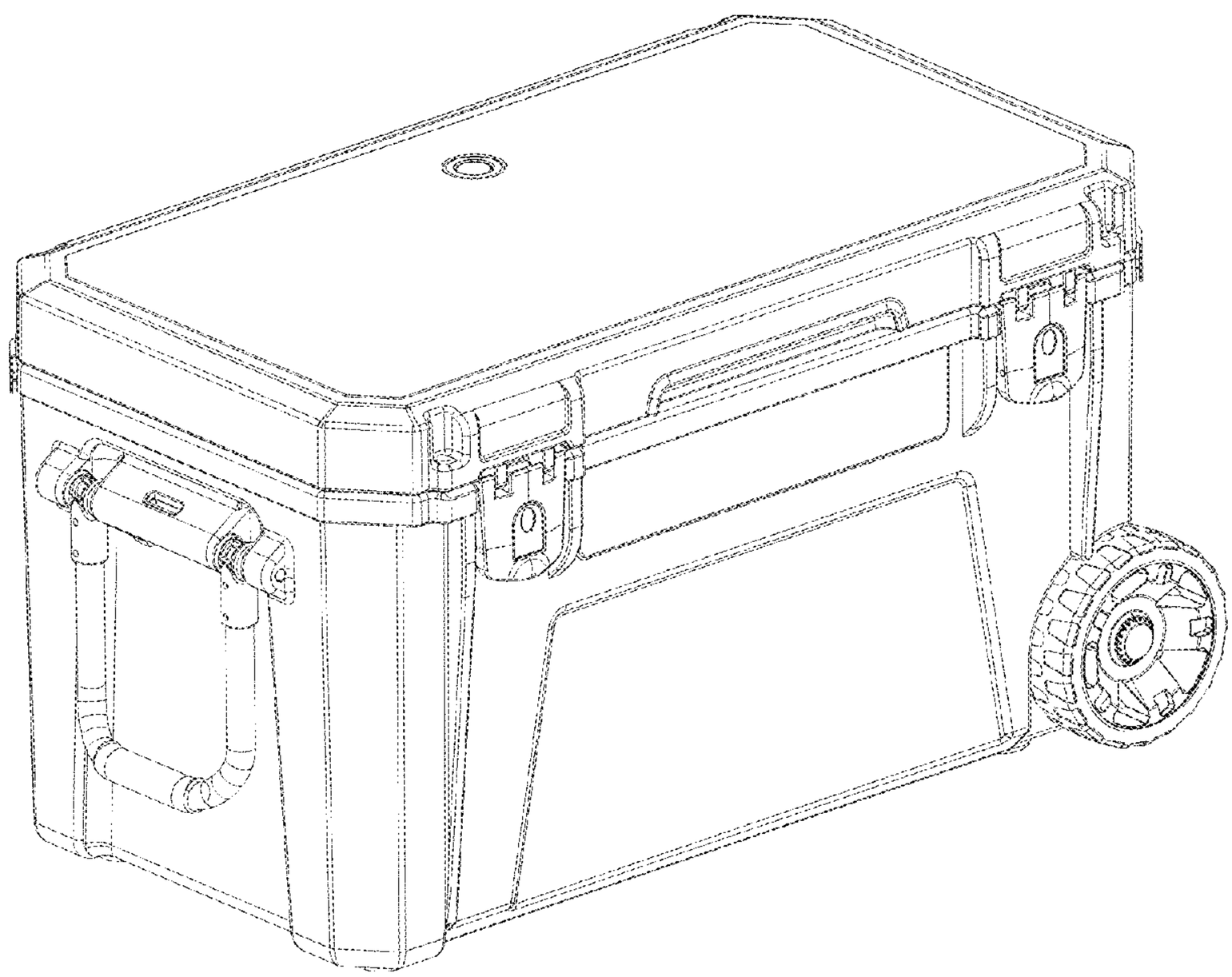

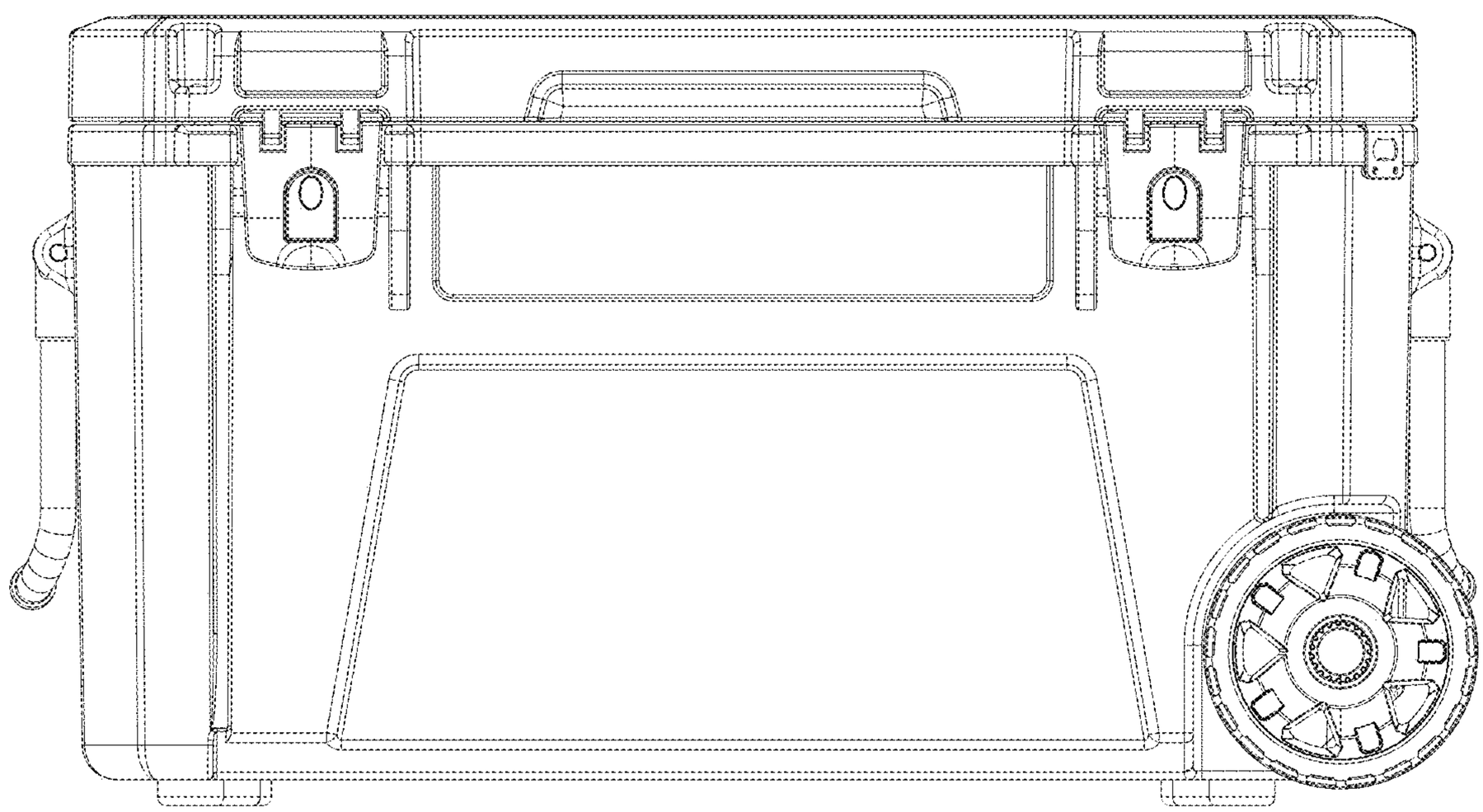

Fig. 1

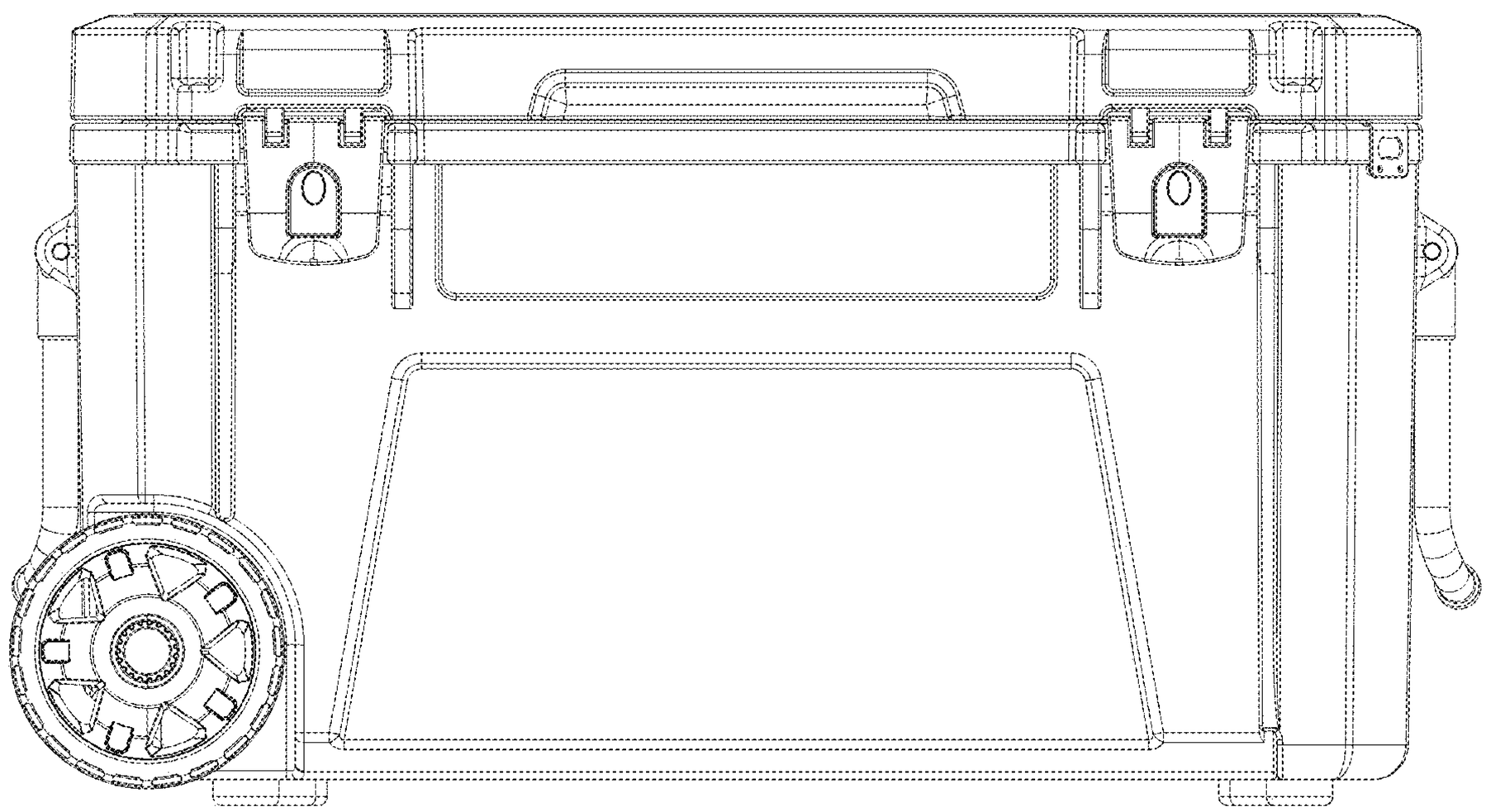

Fig. 2

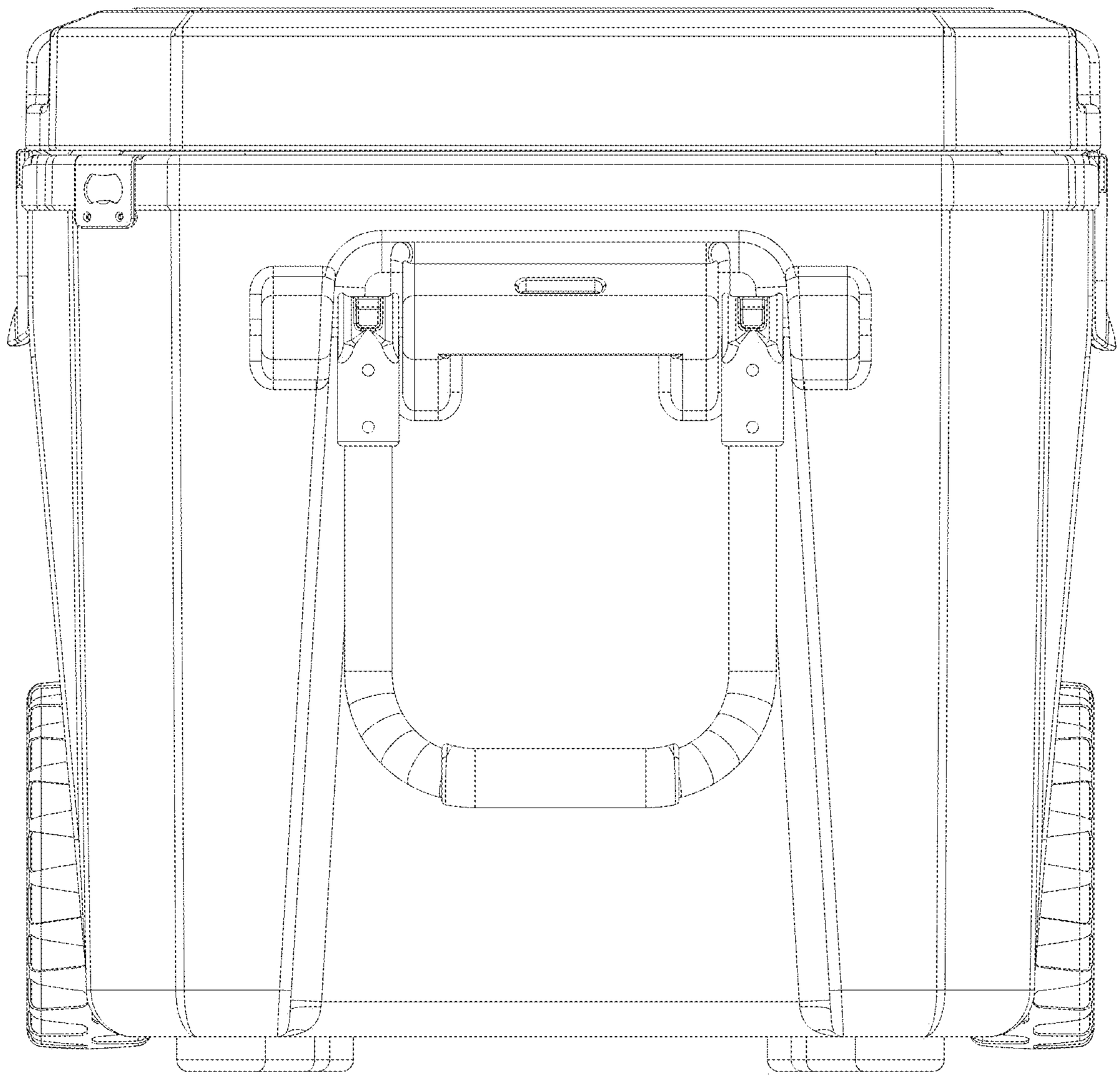

Fig. 3

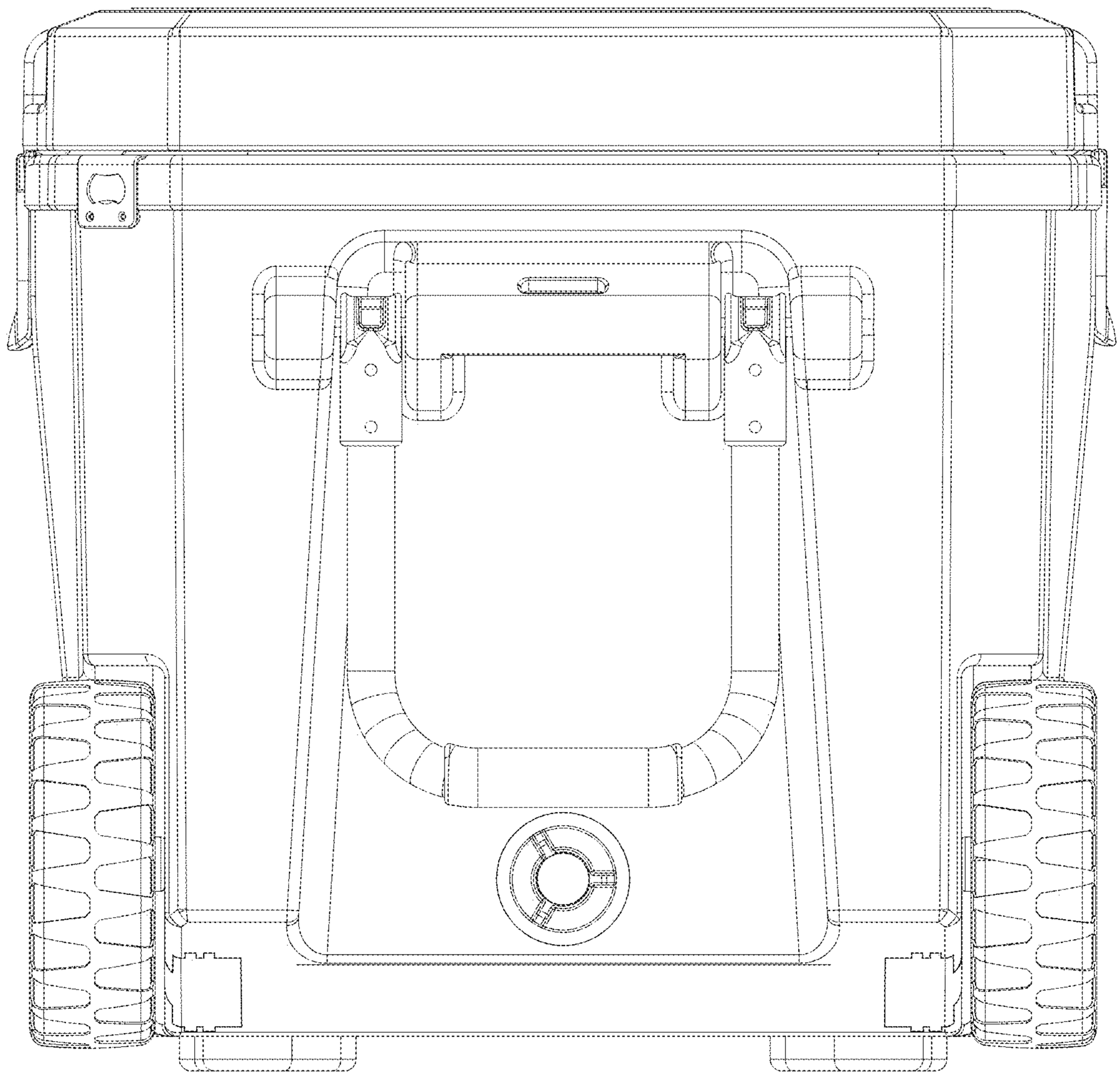

Fig. 4

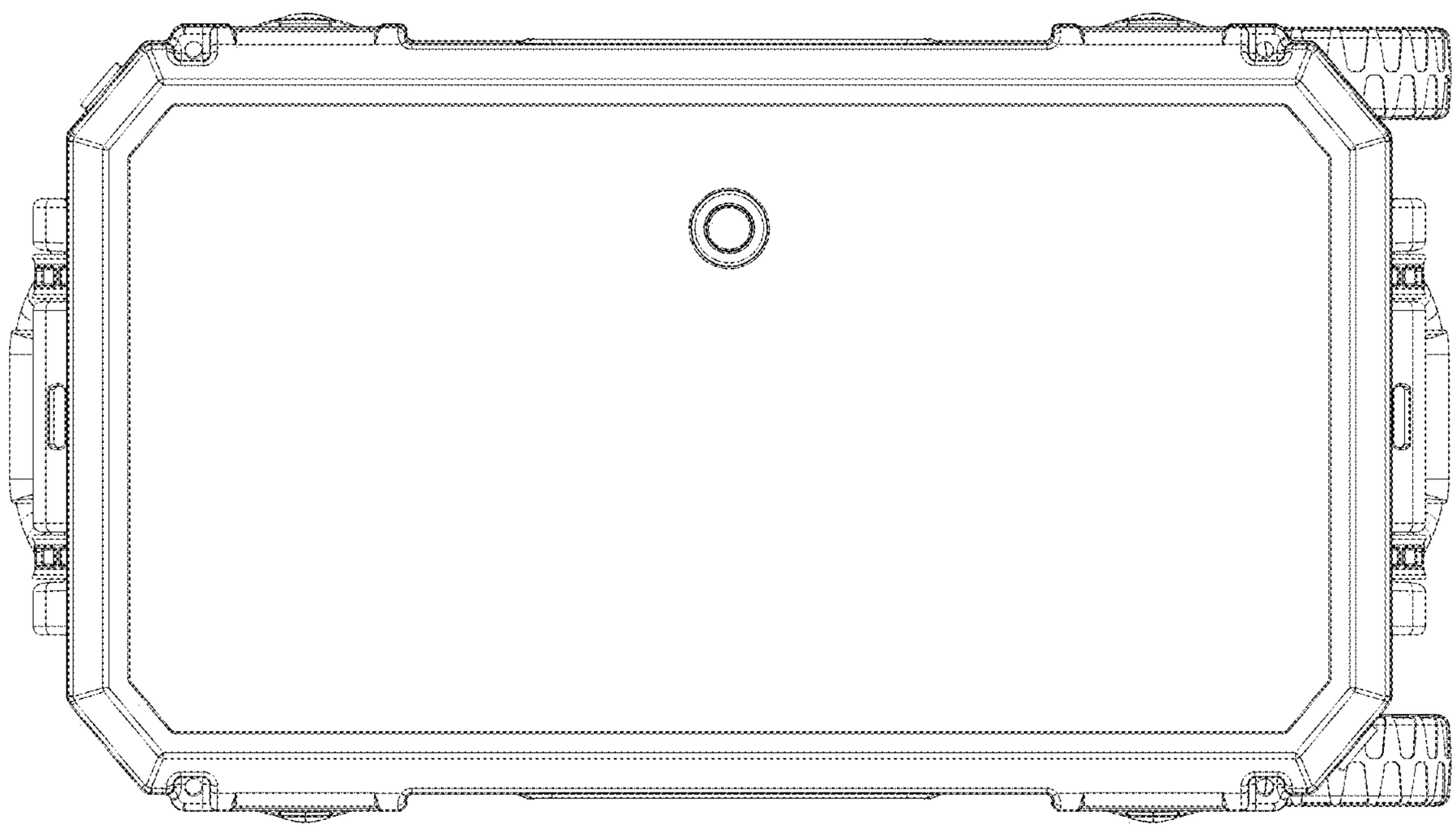

Fig. 5

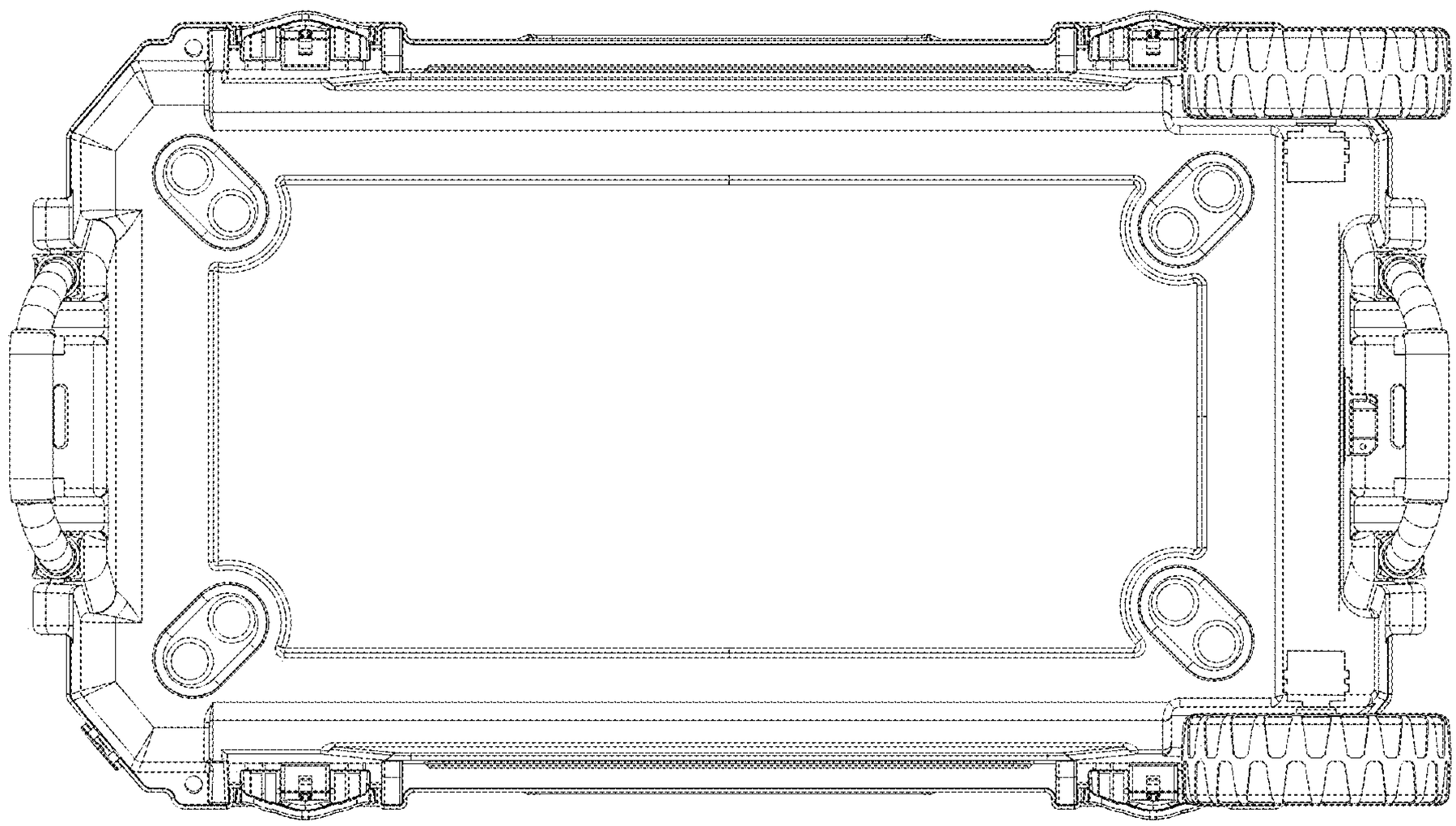

Fig. 6

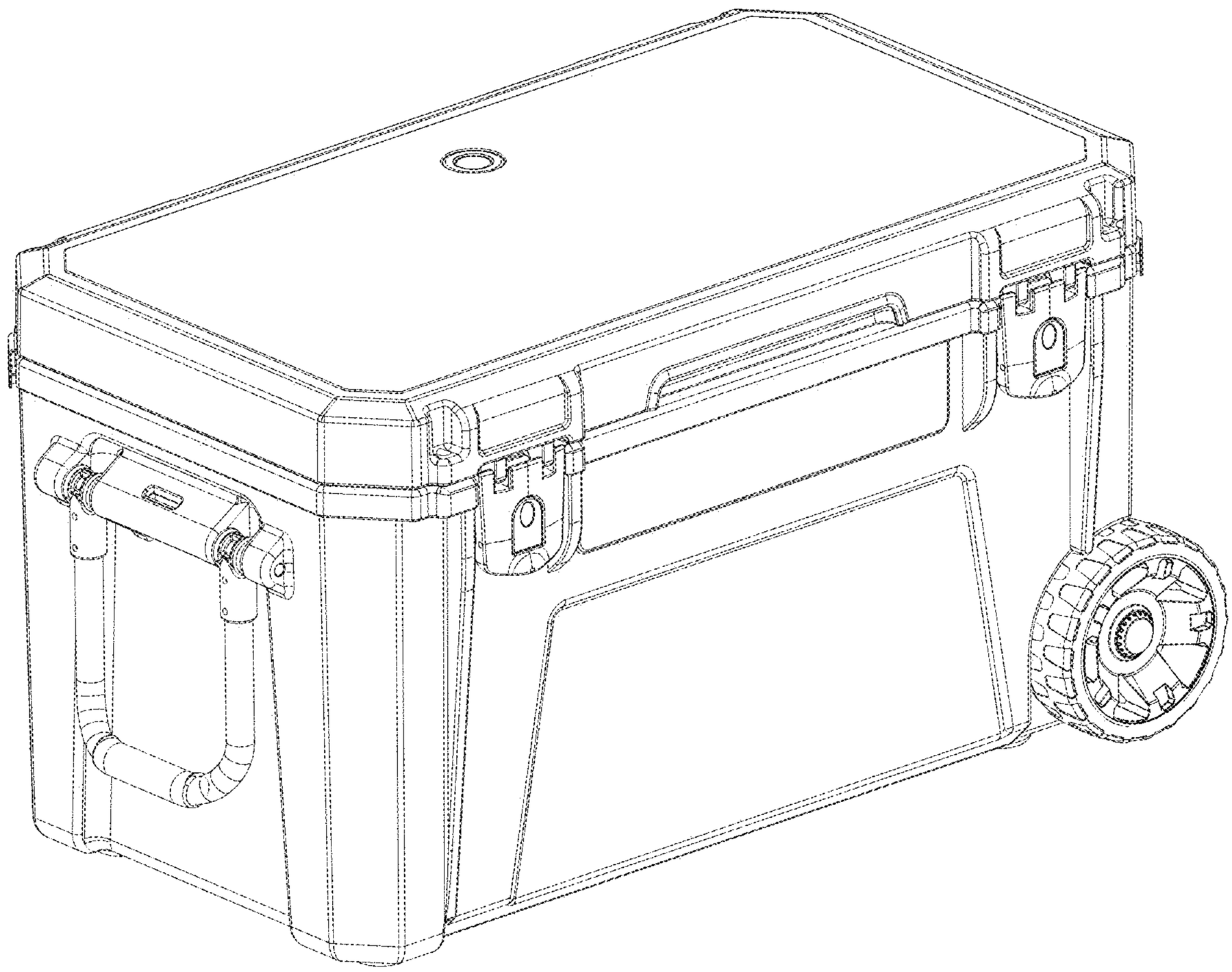

Fig. 7

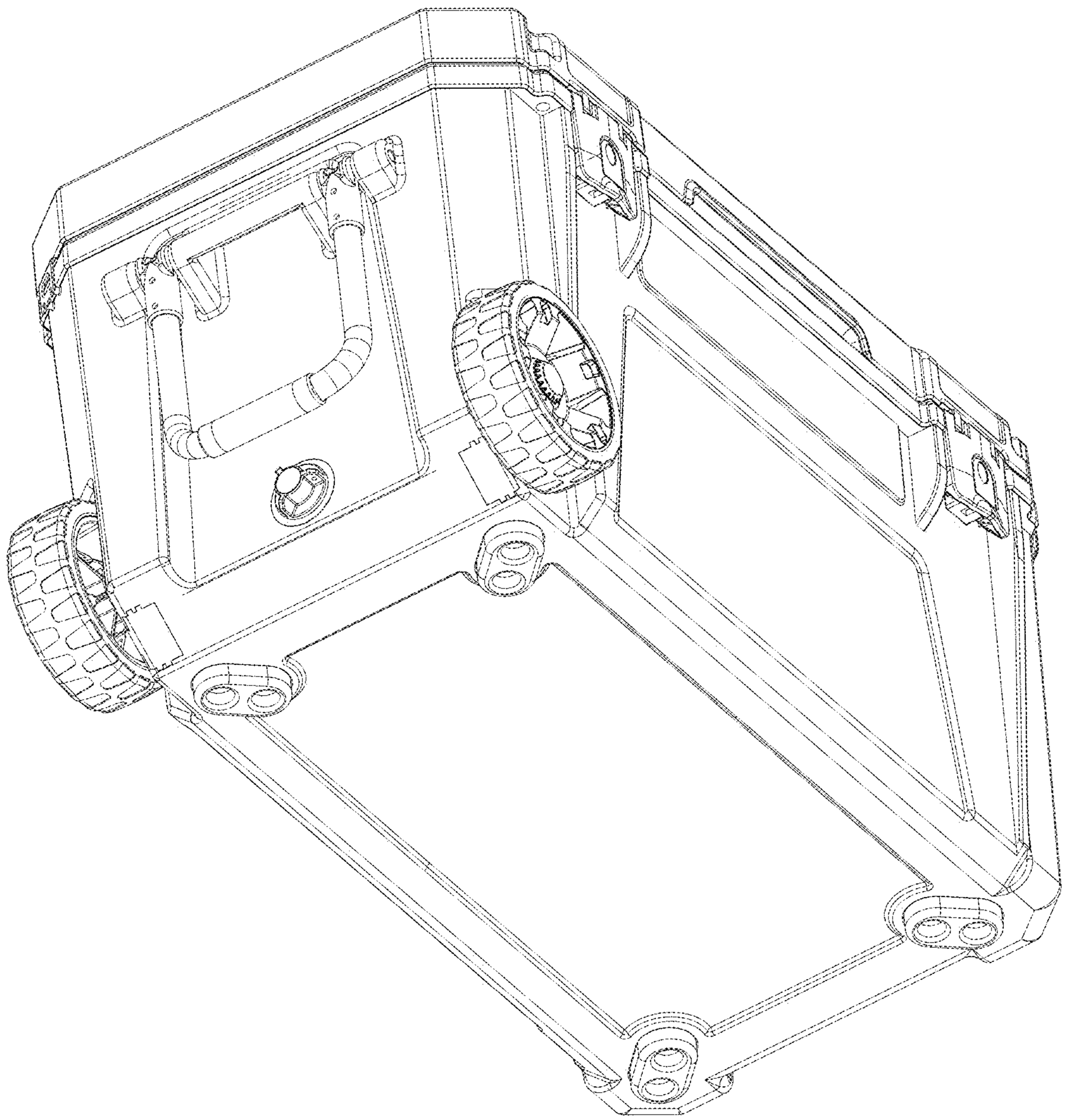

Fig. 8