US00D976973S

# (12) United States Design Patent

Le Roux et al.

(10) Patent No.: US D976,973 S
(45) Date of Patent: ** Jan. 31, 2023

(54) **PRINTING TOWER SYSTEM**

(71) Applicant: **Icon Technology, Inc.**, Austin, TX (US)

(72) Inventors: **Alex Le Roux**, Austin, TX (US); **Henry Wang**, Austin, TX (US); **Nathan Wang**, Austin, TX (US)

(73) Assignee: **ICON TECHNOLOGY, INC.**, Austin, TX (US)

(**) Term: **15 Years**

(21) Appl. No.: **29/773,039**

(22) Filed: **Mar. 5, 2021**

(51) **LOC (14) Cl.** ..... **15-09**

(52) **U.S. Cl.**
USPC ..... **D15/135**

(58) **Field of Classification Search**
USPC ..... D18/40, 43, 46, 47, 48, 53, 54, 55, 56; D15/122, 135, 138; D14/314, 432
CPC . G06T 2207/30196; G06T 2207/30242; G06T 7/70; G06F 3/126; G06F 3/1284
See application file for complete search history.

(56) **References Cited**

U.S. PATENT DOCUMENTS

| | | | | | |
|---|---|---|---|---|---|
| D693,401 | S | * | 11/2013 | Landa | D18/53 |
| D757,170 | S | * | 5/2016 | Rafa | D18/53 |
| D846,634 | S | * | 4/2019 | Chang | D18/50 |
| 10,597,289 | B1 | * | 3/2020 | Woolley | B81C 1/00119 |
| D899,471 | S | * | 10/2020 | Liu | D15/122 |
| D920,406 | S | * | 5/2021 | Longo | D15/145 |
| D933,723 | S | * | 10/2021 | Chen | D15/122 |
| 2005/0062807 | A1 | * | 3/2005 | Ito | B41J 2/14209 347/72 |
| 2016/0107384 | A1 | * | 4/2016 | Enache | B29C 64/118 425/375 |

(Continued)

FOREIGN PATENT DOCUMENTS

| | | | |
|---|---|---|---|
| CN | 303181668 | * | 4/2015 |
| CN | 304081196 | * | 3/2017 |

OTHER PUBLICATIONS

Vulcan Icon 3D printer,Instagram, date published Nov. 2, 2019,date retrieved Jul. 9, 2022—29773039-https://www.instagram.com/p/B4YVgcZlg-1/(Year: 2019).*

(Continued)

*Primary Examiner* — Jennifer L Rempfer
*Assistant Examiner* — Danielle Nichole Bowly
(74) *Attorney, Agent, or Firm* — Kokka & Backus, PC

(57) **CLAIM**

The ornamental design for a printing tower system, as shown and described herein.

**DESCRIPTION**

FIG. **1** illustrates a front, right, perspective view of a printing tower system, of the invention.
FIG. **2** illustrates a front view of the printing tower system shown in FIG. **1**.
FIG. **3** illustrates a rear view of the printing tower system shown in FIG. **1**.
FIG. **4** illustrates a left side view of the printing tower system shown in FIG. **1**.
FIG. **5** illustrates a right side view of the printing tower system shown in FIG. **1**.
FIG. **6** illustrates a top view of the printing tower system shown in FIG. **1**; and,
FIG. **7** illustrates a bottom view of the printing tower system shown in FIG. **1**.
The ornamental design that is claimed is shown in solid lines in the drawings. The broken lines shown in the drawings represent portions of the printer tower system that form no part of the claimed design.

**1 Claim, 7 Drawing Sheets**

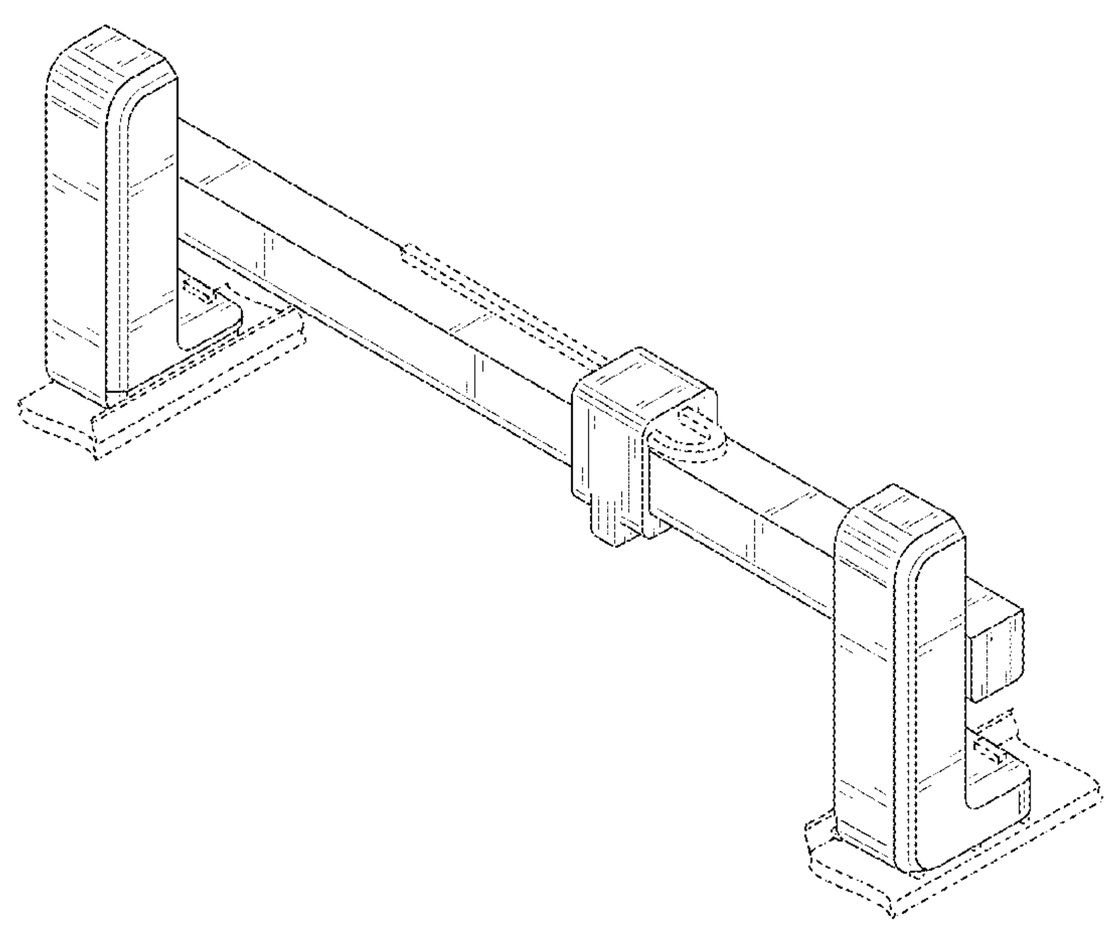

(56) **References Cited**

U.S. PATENT DOCUMENTS

| | | | | |
|---|---|---|---|---|
| 2016/0136886 | A1* | 5/2016 | Jeong | B25J 9/023 425/375 |
| 2016/0303807 | A1* | 10/2016 | Diamante | B33Y 40/00 |
| 2018/0043628 | A1* | 2/2018 | Nadeau | B33Y 40/00 |
| 2018/0079150 | A1* | 3/2018 | Ho | B33Y 50/02 |
| 2018/0169894 | A1* | 6/2018 | Höchsmann | B22F 12/84 |
| 2018/0186096 | A1* | 7/2018 | Huang | B33Y 50/00 |
| 2018/0304552 | A1* | 10/2018 | Lee | B33Y 10/00 |
| 2018/0311895 | A1* | 11/2018 | Budmen | A23P 30/20 |
| 2019/0061239 | A1* | 2/2019 | Liu | B33Y 30/00 |
| 2020/0353683 | A1* | 11/2020 | Yang | B33Y 10/00 |
| 2021/0206074 | A1* | 7/2021 | Lee | B29C 64/118 |
| 2022/0193996 | A1* | 6/2022 | Durand | B29C 64/25 |

OTHER PUBLICATIONS

Vulcan Icon 3D printer, YouTube, date published Apr. 19, 2019,date retrieved Jul. 9, 2022—29773039-https://www.youtube.com/watch?v=kcZT_BUIxZM (Year: 2019).*

* cited by examiner

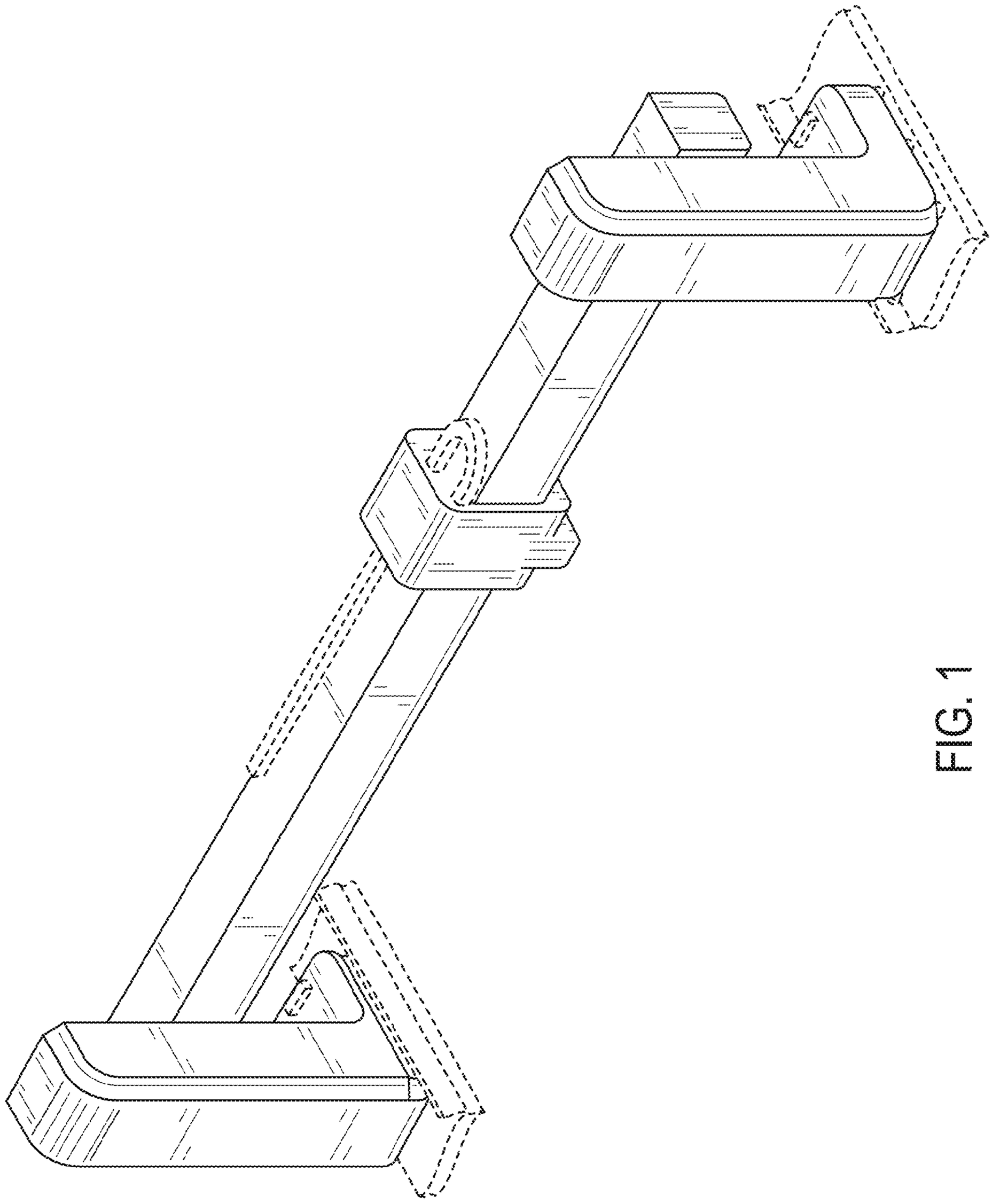

FIG. 1

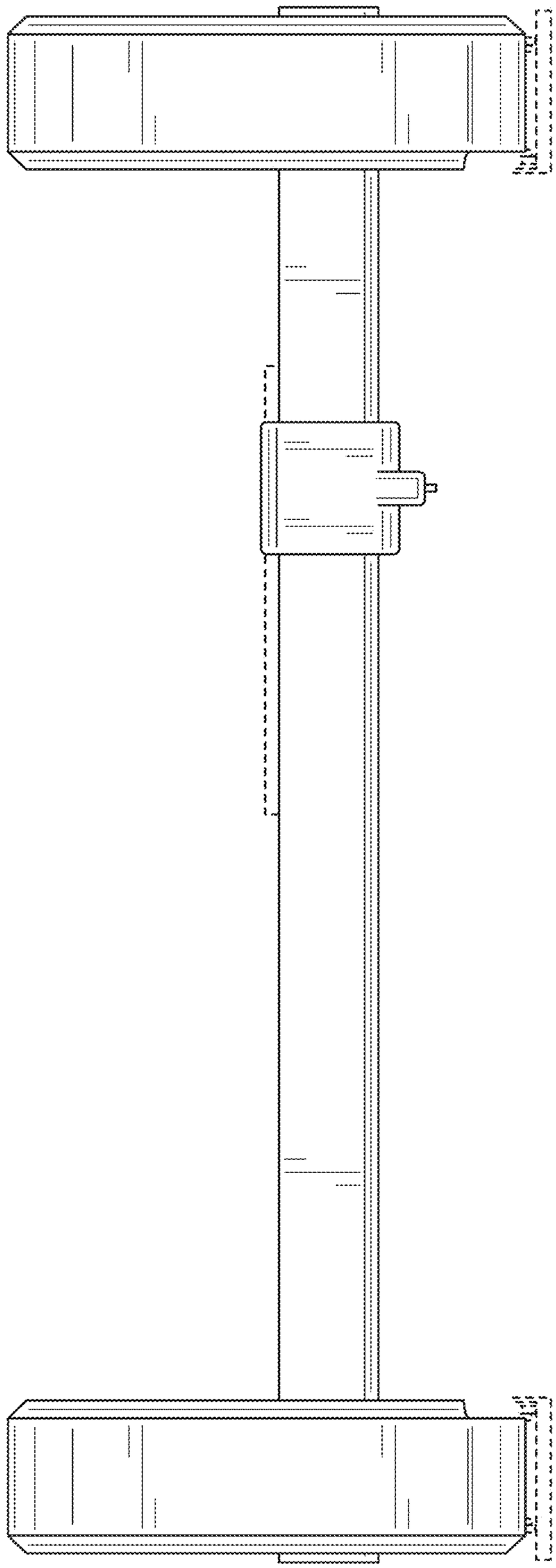

FIG. 2

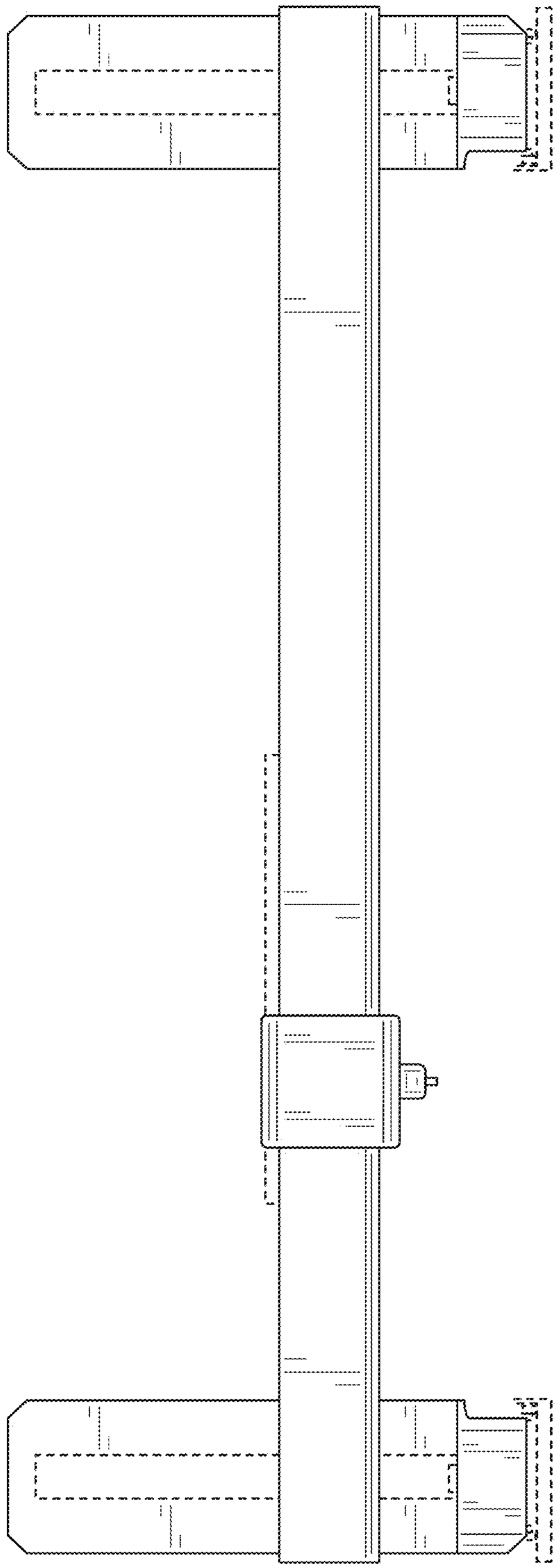

FIG. 3

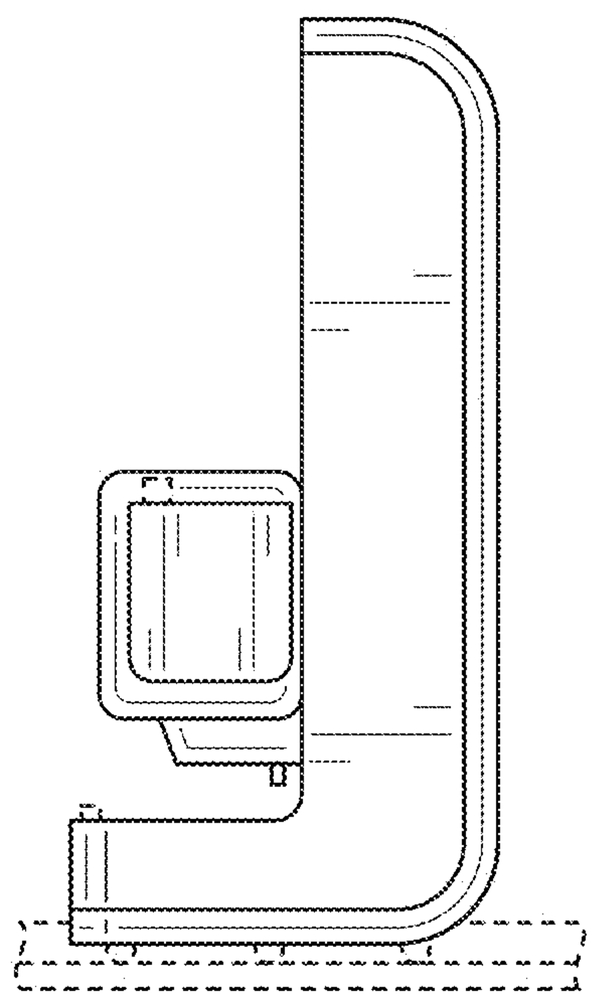

FIG. 4

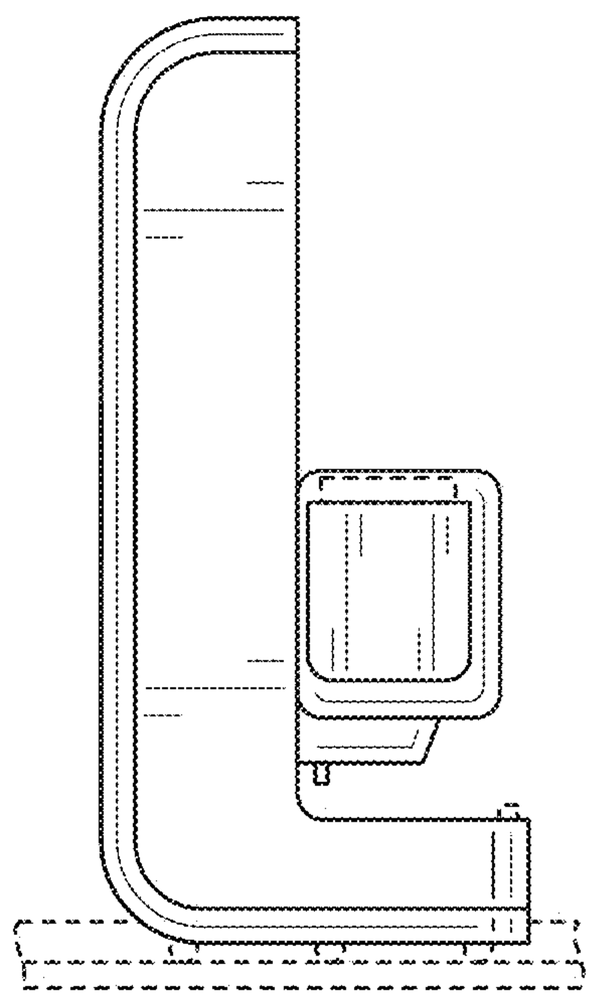

FIG. 5

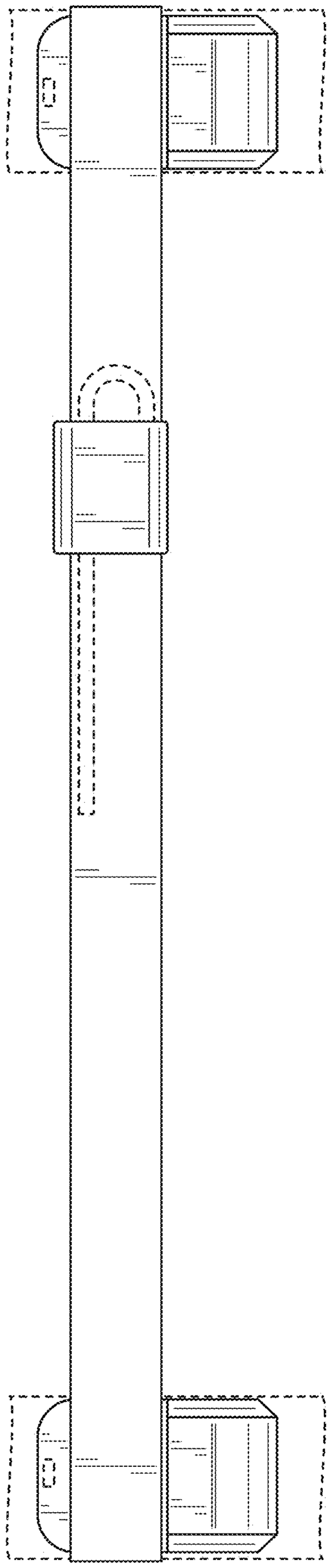

FIG. 6

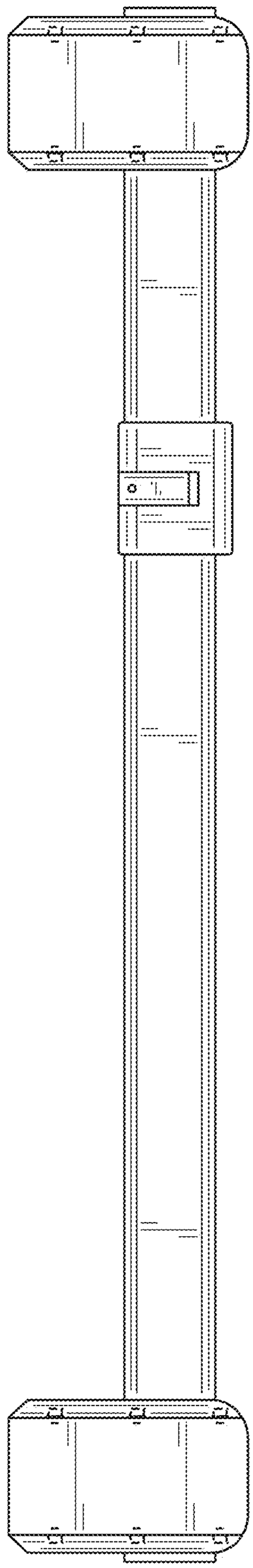

FIG. 7