US00D976345S

(12) United States Design Patent
Sisler

(10) Patent No.: US D976,345 S
(45) Date of Patent: ** Jan. 24, 2023

(54) **ADJUSTABLE KETTLEBELL**

(71) Applicant: **Craig Louis Sisler**, Meadowview, VA (US)

(72) Inventor: **Craig Louis Sisler**, Meadowview, VA (US)

(**) Term: **15 Years**

(21) Appl. No.: **29/840,103**

(22) Filed: **May 26, 2022**

Related U.S. Application Data

(63) Continuation-in-part of application No. 29/815,985, filed on Nov. 18, 2021.

(51) **LOC (14) Cl.** **21-02**

(52) **U.S. Cl.**
USPC **D21/682**; D21/680; D21/694

(58) **Field of Classification Search**
USPC D21/680, 682, 662, 684, 686, 692, 681; 482/93, 106, 110, 108, 44, 91, 112; D30/160; D19/64
CPC A63B 21/0728; A63B 21/00065; A63B 21/072; A63B 21/075; A63B 21/4035; A63B 21/06; A63B 21/0602; A63B 21/0004
See application file for complete search history.

(56) **References Cited**

U.S. PATENT DOCUMENTS

4,717,147 A * 1/1988 Rochelle A63B 21/0724 482/106
D416,959 S * 11/1999 Tumminia D21/679
6,387,022 B1 * 5/2002 Smith A63B 65/06 482/106
D522,594 S * 6/2006 Donahue D21/682
D522,595 S * 6/2006 Donahue D21/682
D571,418 S * 6/2008 Gormley D21/680
7,491,157 B1 * 2/2009 Lin A63B 21/072 482/107
7,563,208 B1 * 7/2009 Chen A63B 21/075 482/93
7,762,933 B1 * 7/2010 Yu A63B 21/075 482/109
7,883,452 B1 * 2/2011 Chen A63B 21/072 482/93
D644,701 S * 9/2011 Towley, III D21/681
D651,672 S * 1/2012 Towley, III D21/681
D652,877 S * 1/2012 Dalebout D21/682
D653,715 S * 2/2012 Tumminia A63B 21/072 D21/679
D664,613 S * 7/2012 Dalebout D21/682
D692,509 S * 10/2013 Kessler D21/682
9,022,906 B1 * 5/2015 Nelson A63B 21/4035 482/109
(Continued)

Primary Examiner — Ryan Harvey
(74) *Attorney, Agent, or Firm* — Gearhart Law LLC; David Postolski

(57) **CLAIM**

I claim the ornamental design for an adjustable kettlebell, as shown and described.

DESCRIPTION

FIG. **1** depicts a top perspective view of a new and ornamental design for an adjustable kettlebell;
FIG. **2** depicts a bottom perspective view of FIG. **1**;
FIG. **3** depicts a front elevational view of FIG. **1**;
FIG. **4** depicts a rear elevational view of FIG. **1**;
FIG. **5** depicts a left side elevational view of FIG. **1**;
FIG. **6** depicts a right side elevational view of FIG. **1**;
FIG. **7** depicts a top plan view of FIG. **1**;
FIG. **8** depicts a bottom plan view of FIG. **1**; and,
FIG. **9** depicts a perspective view of the adjustable kettlebell, shown in use.
The broken line showing of portions of the adjustable kettlebell forms no part of the claim.

1 Claim, 9 Drawing Sheets

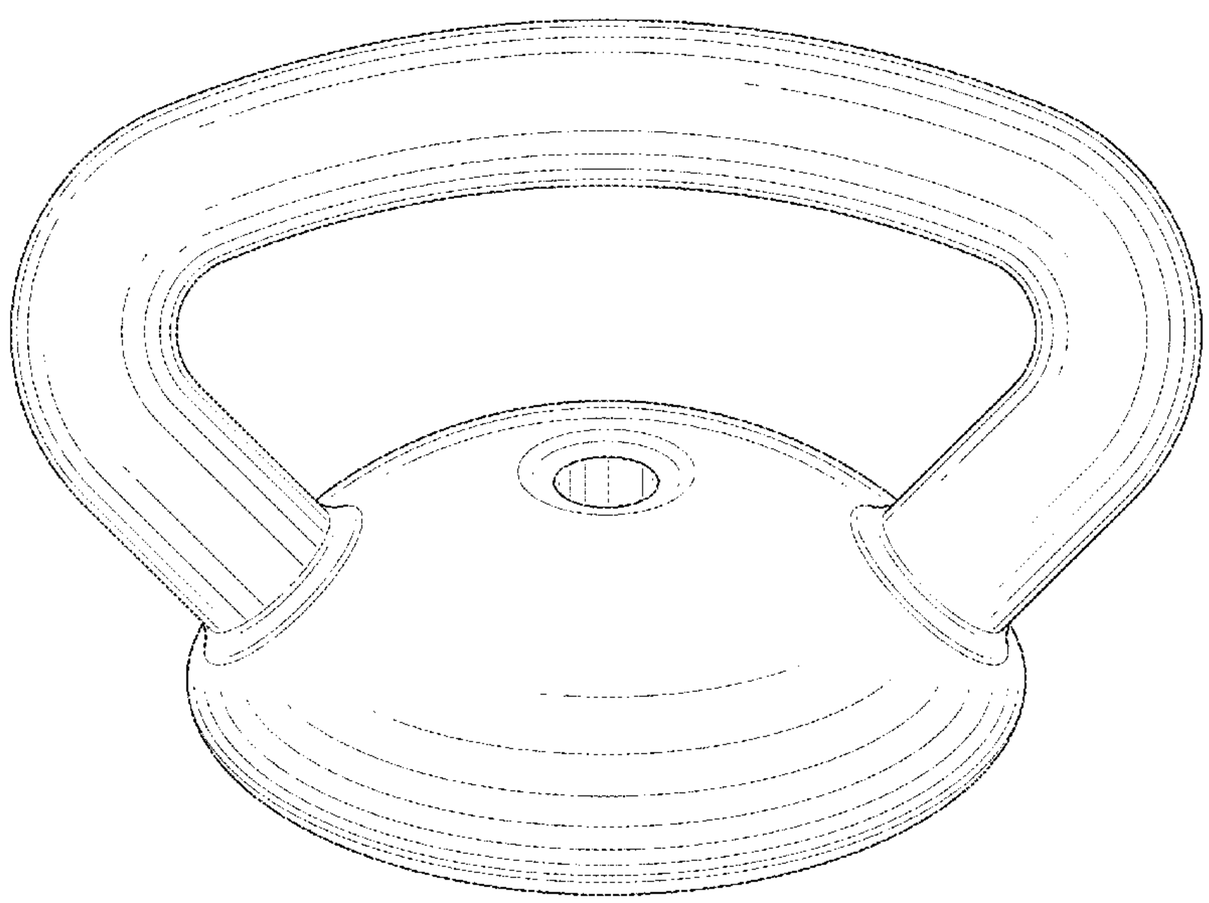

(56) **References Cited**

U.S. PATENT DOCUMENTS

9,327,159 B1 * 5/2016 Medina A63B 21/0726
9,731,159 B2 * 8/2017 Reynolds A63B 21/4035
D796,592 S * 9/2017 Towley D21/682
9,814,421 B2 * 11/2017 Edwards A61B 5/221
D804,592 S * 12/2017 Wittmack D21/681
10,099,083 B1 * 10/2018 Owusu A63B 24/0062
10,188,899 B1 * 1/2019 Acuna, Jr. A63B 21/0442
D843,511 S * 3/2019 Harrison D21/682
D844,718 S * 4/2019 Buikema D21/682
D879,888 S * 3/2020 Flick D21/680
D879,891 S * 3/2020 Sundblad D21/694
D888,848 S * 6/2020 Owusu D21/680
10,695,614 B2 * 6/2020 Owusu A61B 5/6895
D896,325 S * 9/2020 Sundblad D21/682
D908,819 S * 1/2021 Flick D21/680
D942,559 S * 2/2022 Wang D21/680
2006/0035767 A1 * 2/2006 Ekhaus A63B 21/0601
482/50
2007/0135274 A1 * 6/2007 Blateri A63B 21/075
482/109
2008/0081744 A1 * 4/2008 Gormley A63B 21/0728
482/93
2009/0062085 A1 * 3/2009 Polevoy A63B 21/0728
482/93
2010/0120588 A1 * 5/2010 Krull A63B 21/0728
482/93
2010/0190619 A1 * 7/2010 Chen A63B 21/072
482/108
2010/0331151 A1 * 12/2010 Signorile A63B 21/00196
482/93
2011/0263392 A1 * 10/2011 Yu A63B 21/072
482/93
2011/0275494 A1 * 11/2011 Radi A63B 21/0603
482/93
2012/0252641 A1 * 10/2012 Odneal A63B 21/072
482/108
2013/0040789 A1 * 2/2013 Kessler A63B 21/072
482/108
2013/0210589 A1 * 8/2013 Thompson A63B 21/0726
482/108
2014/0024506 A1 * 1/2014 Vixathep A63B 21/072
482/108
2014/0057764 A1 * 2/2014 Klukas A63B 21/0728
482/109
2015/0105224 A1 * 4/2015 Odneal A63B 21/0726
164/47
2015/0196792 A1 * 7/2015 Towley A63B 21/075
482/93
2017/0225025 A1 * 8/2017 Towley A63B 71/0036
2017/0246495 A1 * 8/2017 Wyncott A63B 21/00065
2018/0117387 A1 * 5/2018 Wang A63B 21/072
2018/0169460 A1 * 6/2018 Chen A63B 21/075
2019/0217146 A1 * 7/2019 Sisler A63B 21/072
2019/0240526 A1 * 8/2019 Owusu A63B 21/0724
2021/0154520 A1 * 5/2021 Sundblad A63B 21/0728
2021/0244994 A1 * 8/2021 Wang A63B 21/075
2021/0379440 A1 * 12/2021 Sisler A63B 21/0728

* cited by examiner

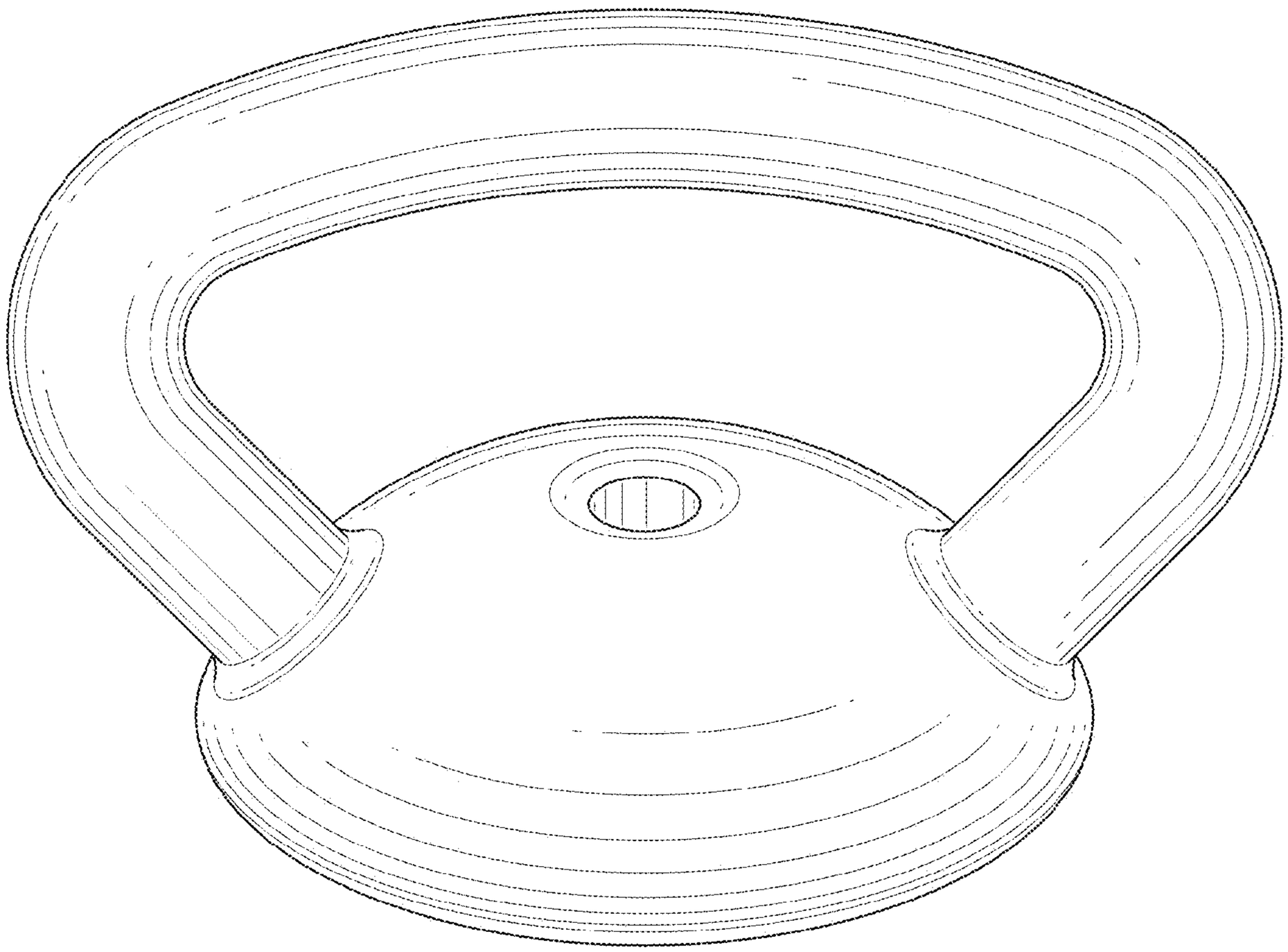

FIG. 1

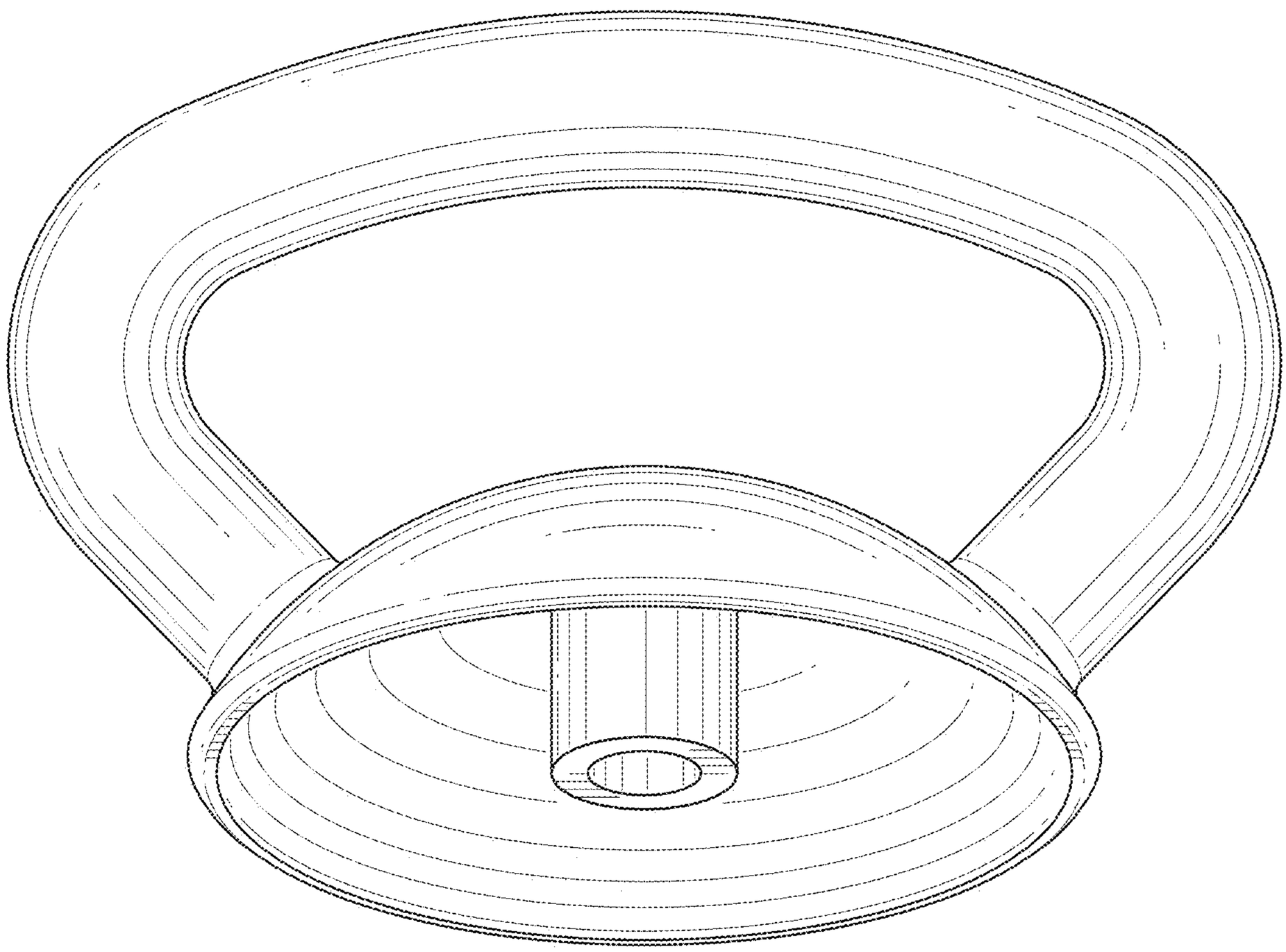

FIG. 2

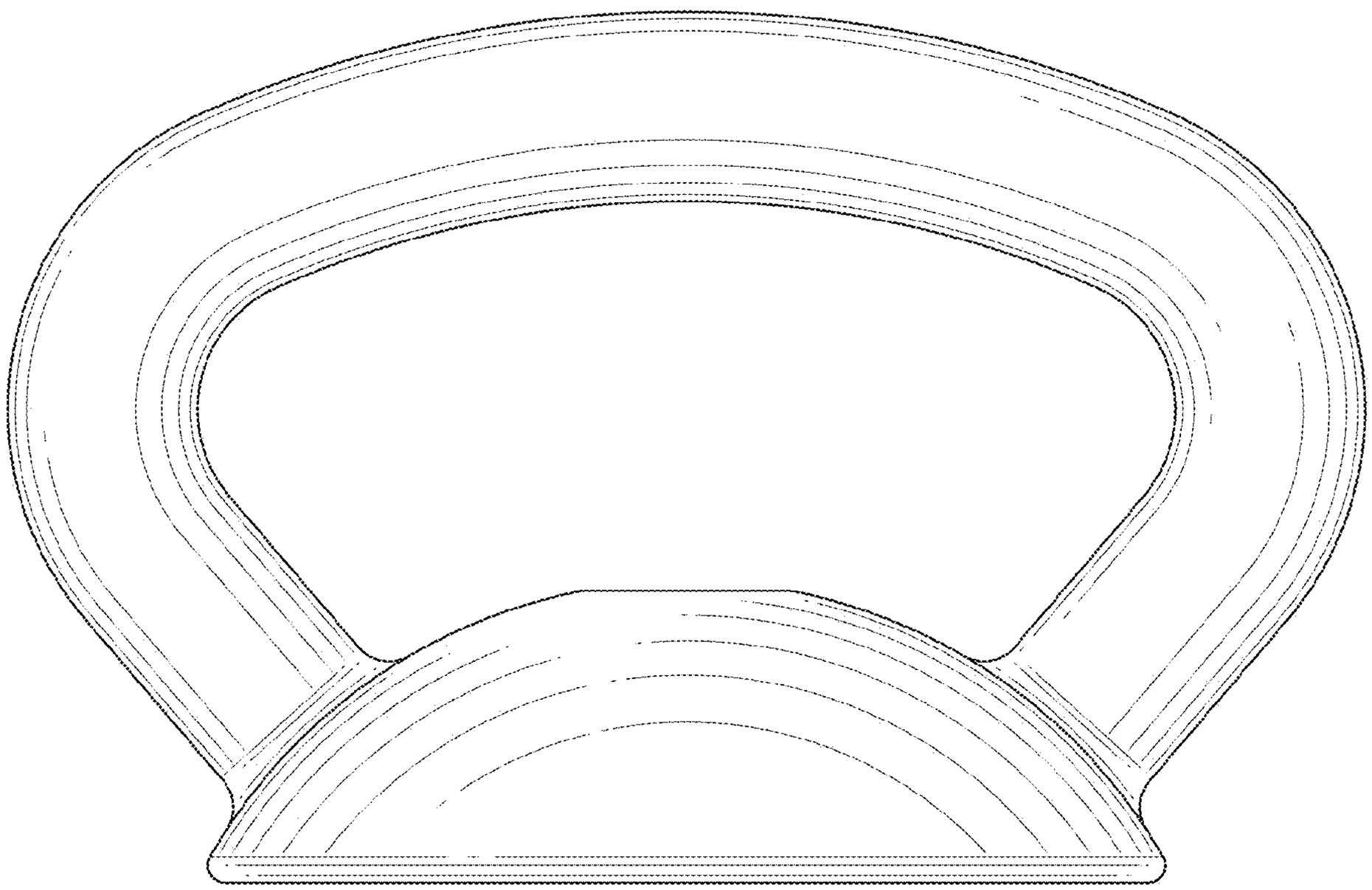

FIG. 3

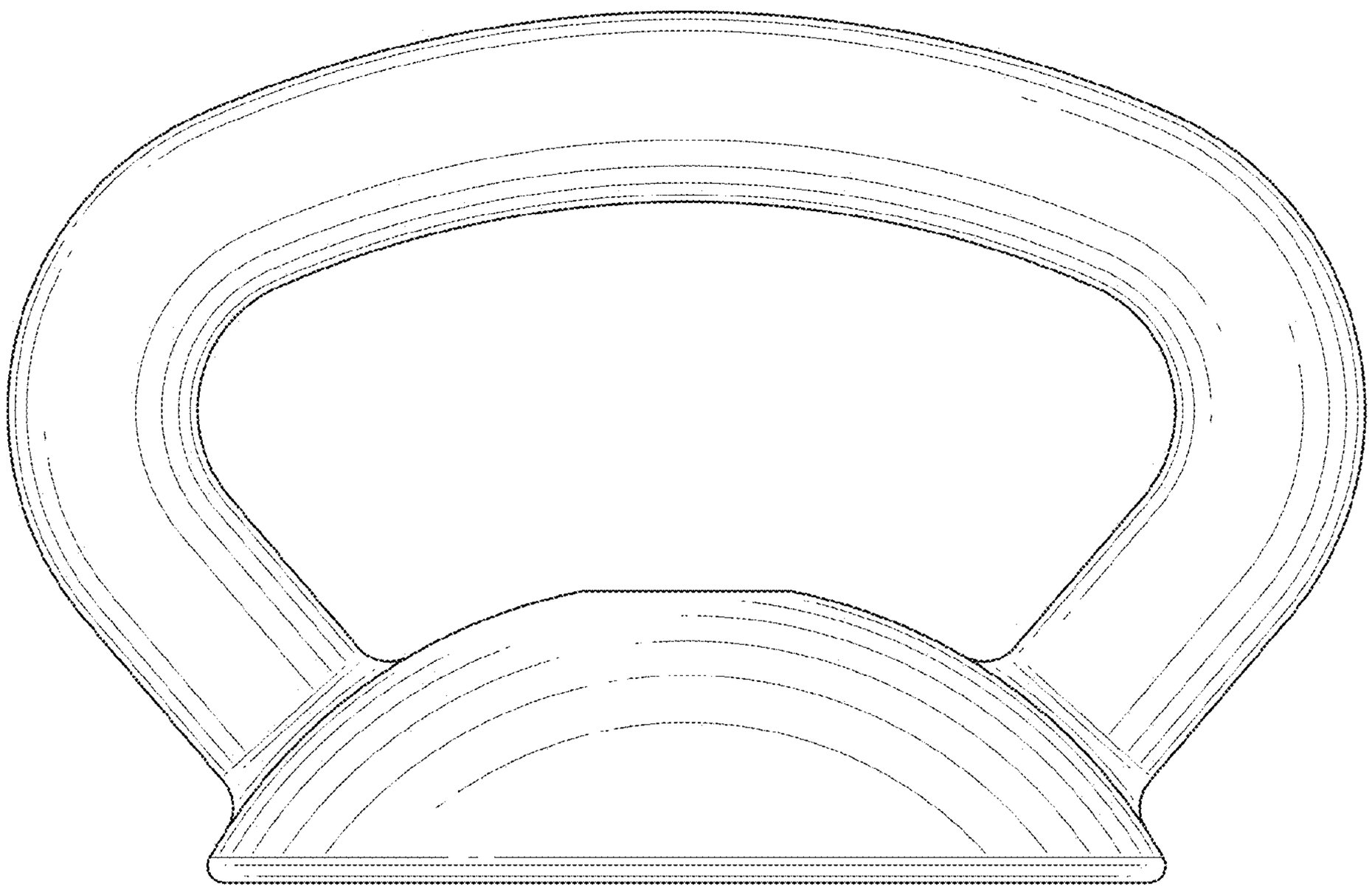

FIG.4

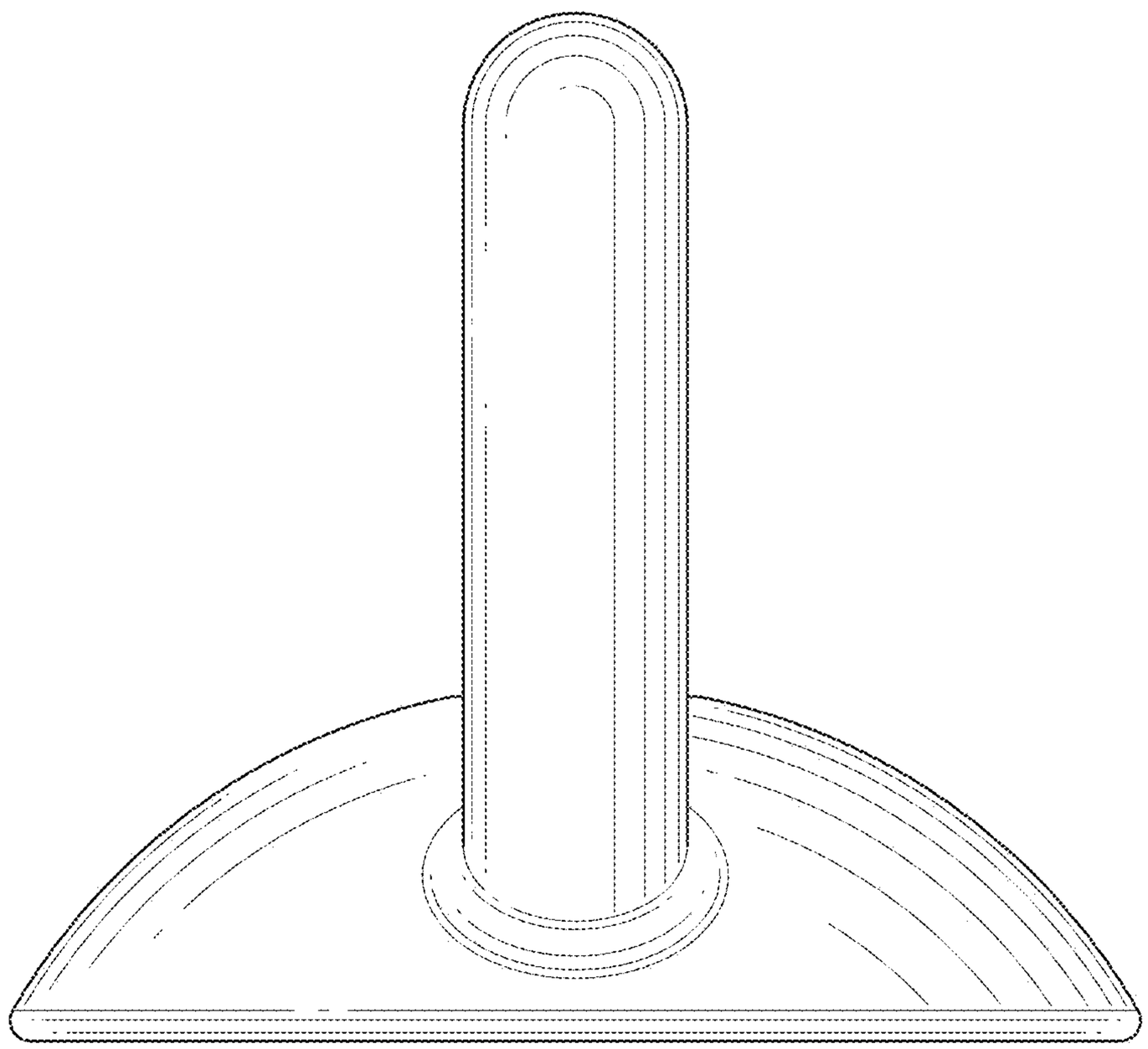

FIG.5

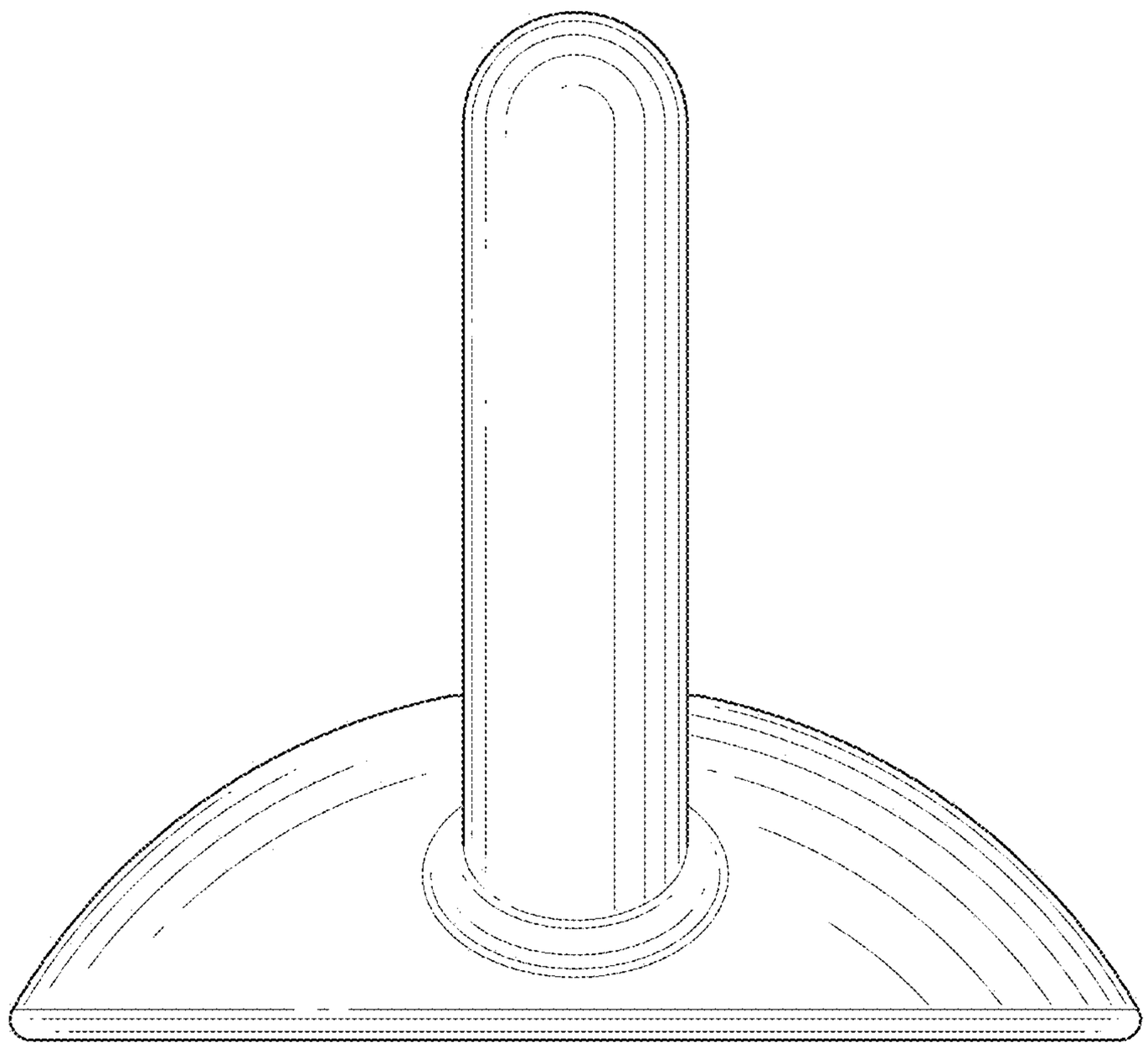

FIG.6

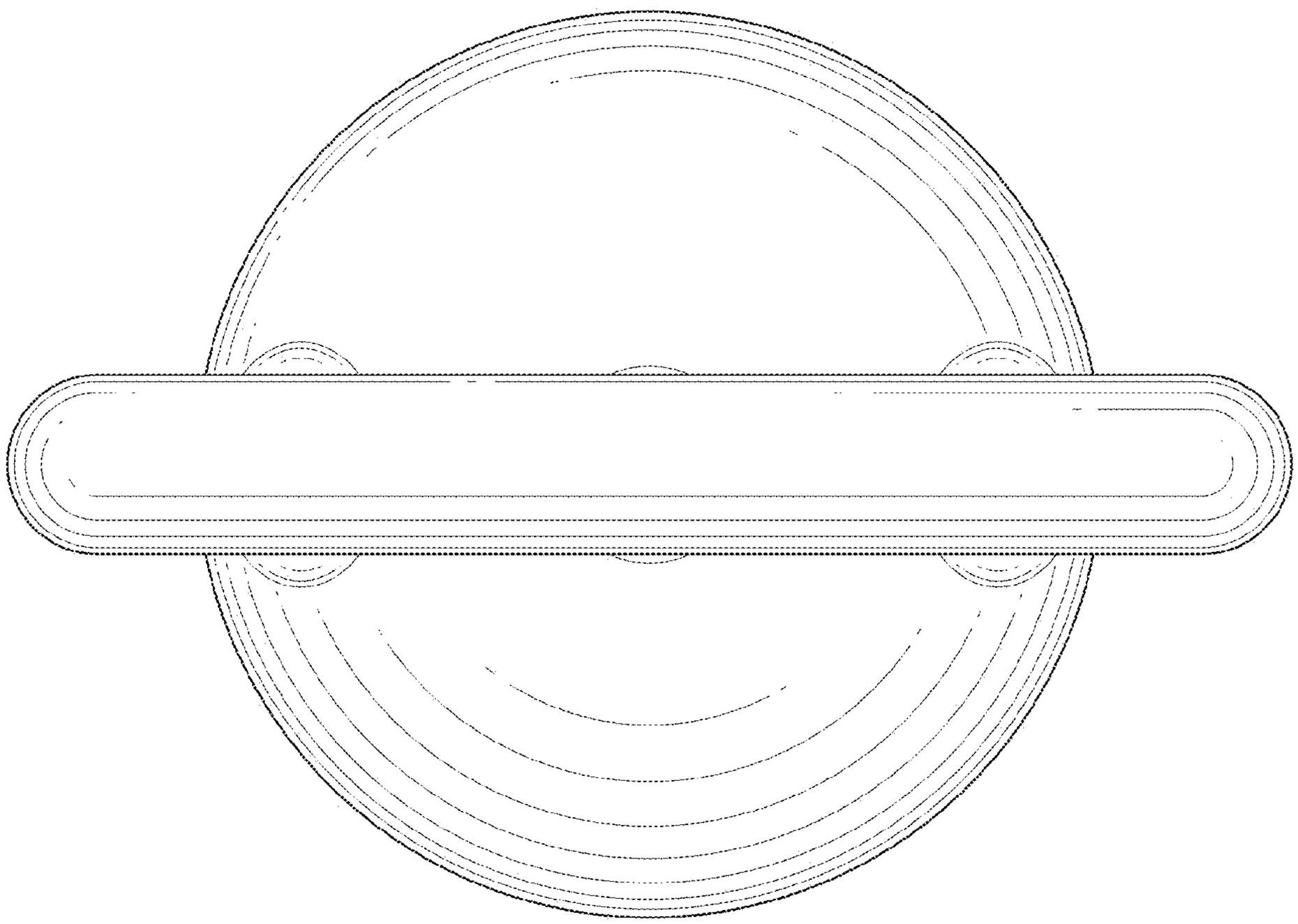

FIG.7

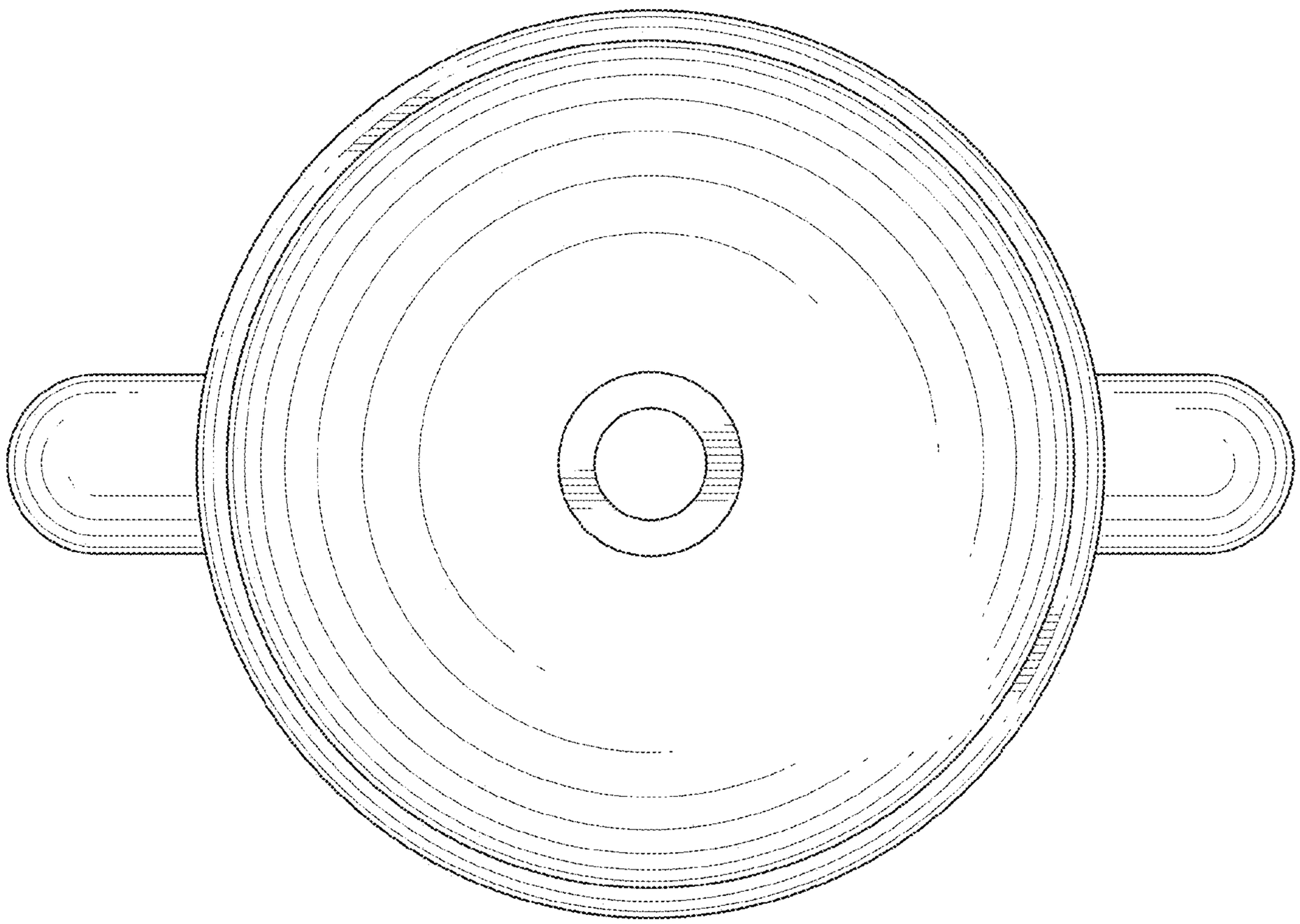

FIG.8

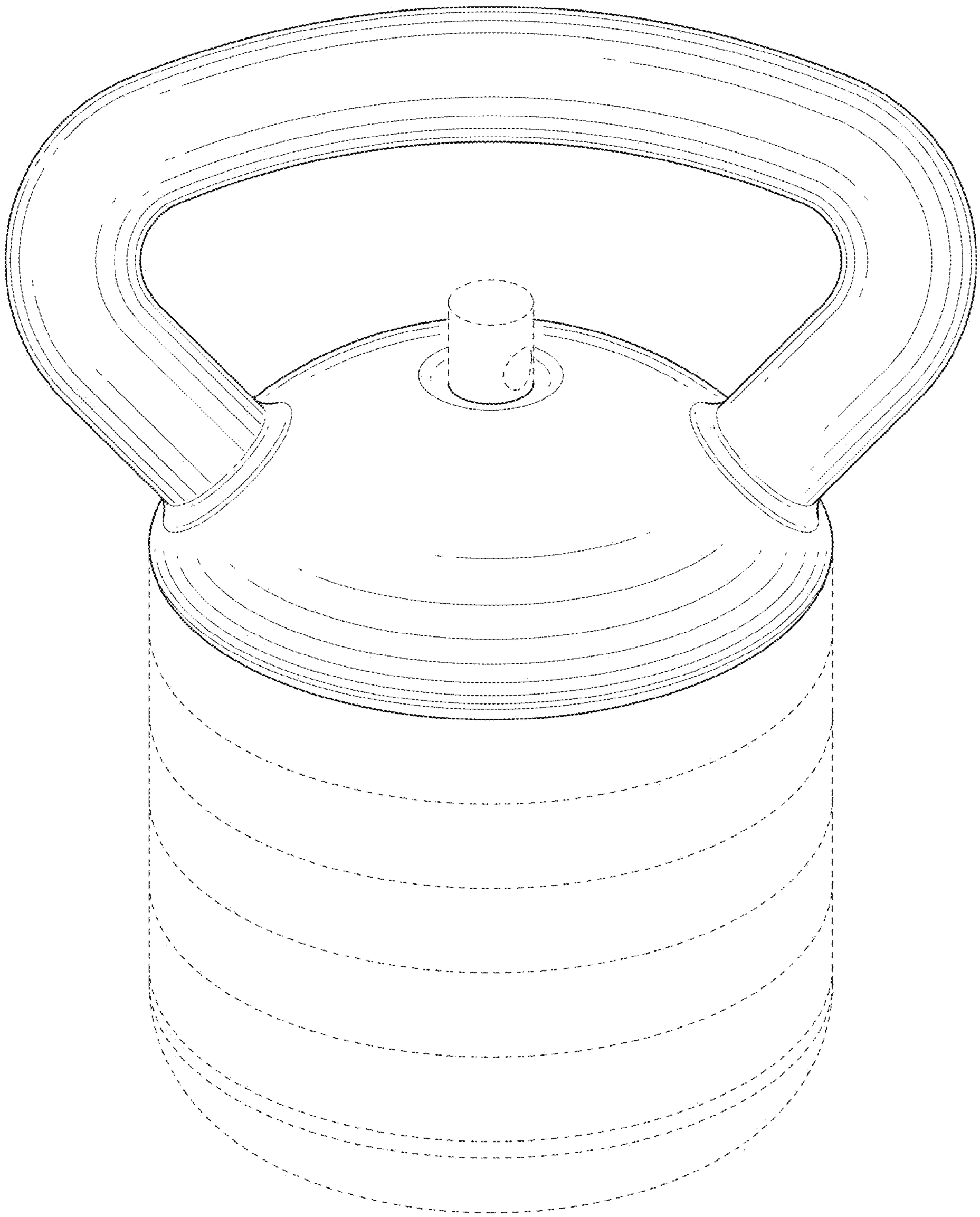

FIG.9