US00D974537S

(12) United States Design Patent

Hamasaki et al.

(10) Patent No.: US D974,537 S
(45) Date of Patent: ** Jan. 3, 2023

(54) **AIR CONDITIONER**

(71) Applicant: **Mitsubishi Electric Corporation**, Tokyo (JP)

(72) Inventors: **Izuru Hamasaki**, Tokyo (JP); **Satoshi Arai**, Tokyo (JP); **Takanori Ikegaya**, Tokyo (JP)

(73) Assignee: **Mitsubishi Electric Corporation**, Tokyo (JP)

(**) Term: **15 Years**

(21) Appl. No.: **29/733,040**

(22) Filed: **Apr. 29, 2020**

(30) **Foreign Application Priority Data**

Oct. 29, 2019 (JP) 2019-024097
Oct. 29, 2019 (JP) 2019-024098

(51) **LOC (14) Cl.** **23-04**

(52) **U.S. Cl.**
USPC **D23/351**

(58) **Field of Classification Search**
USPC D23/333, 335, 351–367, 388; D13/111, D13/102; D15/7–9.3, 144, 144.2; D34/7
CPC . A01G 13/06; A24F 25/00; A61L 9/00; A61L 9/03; A61L 9/04; A61L 9/14; A61L 9/015; A61L 9/032; A61L 9/035; A61L 9/122; A61L 2209/14; B05B 7/1686; F24F 1/00; F24F 1/027; F24F 1/02; F24F 1/08; F24F 1/42; F24F 1/56; F24F 1/60; F24F 1/62; F24F 1/64; F24F 1/0007; F24F 3/12; F24F 3/14; F24F 3/16; F24F 3/048; F24F 13/32; F24F 2221/20
See application file for complete search history.

(56) **References Cited**

U.S. PATENT DOCUMENTS

D612,469	S	*	3/2010	Nagahori	D23/351
D623,281	S	*	9/2010	Ishida	D23/351
D667,095	S	*	9/2012	Yamana	D23/351
D669,161	S	*	10/2012	Yamana	D23/351
D669,566	S	*	10/2012	Yamana	D23/351
D669,567	S	*	10/2012	Yamana	D23/351
D670,799	S	*	11/2012	Yamana	D23/351
D849,910	S	*	5/2019	Arai	D23/351
D849,911	S	*	5/2019	Arai	D23/351
D849,912	S	*	5/2019	Arai	D23/351

* cited by examiner

Primary Examiner — Gino Colan
Assistant Examiner — David Obrien
(74) *Attorney, Agent, or Firm* — Studebaker & Brackett PC

(57) **CLAIM**

The ornamental design for an air conditioner, as shown and described.

DESCRIPTION

FIG. **1**. is a perspective view of the front, right, and bottom sides of an air conditioner showing our new design;
FIG. **2**. is a front view thereof;
FIG. **3**. is a rear view thereof;
FIG. **4**. is a left side view thereof;
FIG. **5**. is a right side view thereof,
FIG. **6**. is a top plan view thereof; and,
FIG. **7**. is a bottom plan view thereof.
The broken lines shown in the figures are for the purpose of illustrating portions of the air conditioner and form no part of the claimed design.

1 Claim, 7 Drawing Sheets

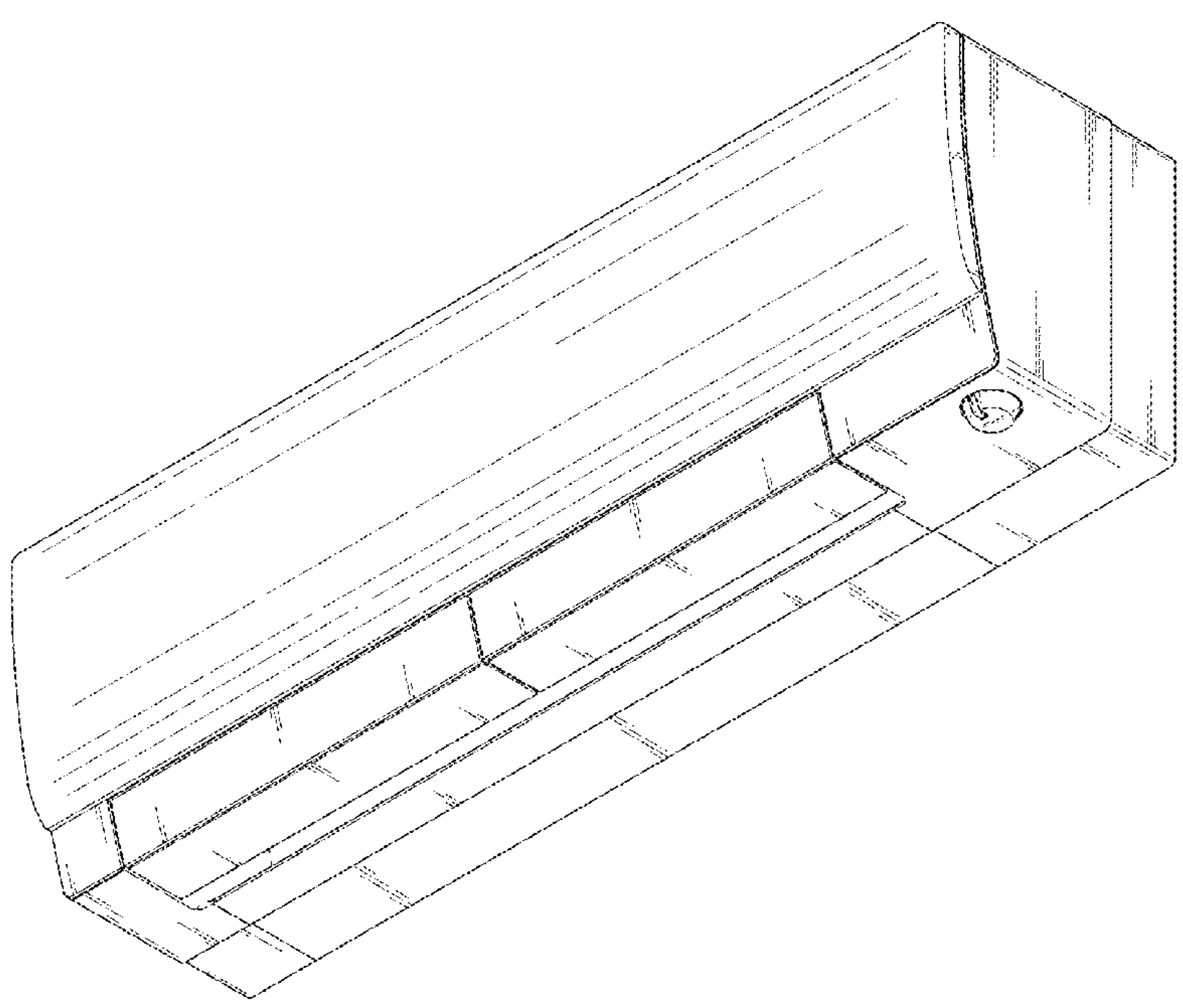

Fig.1

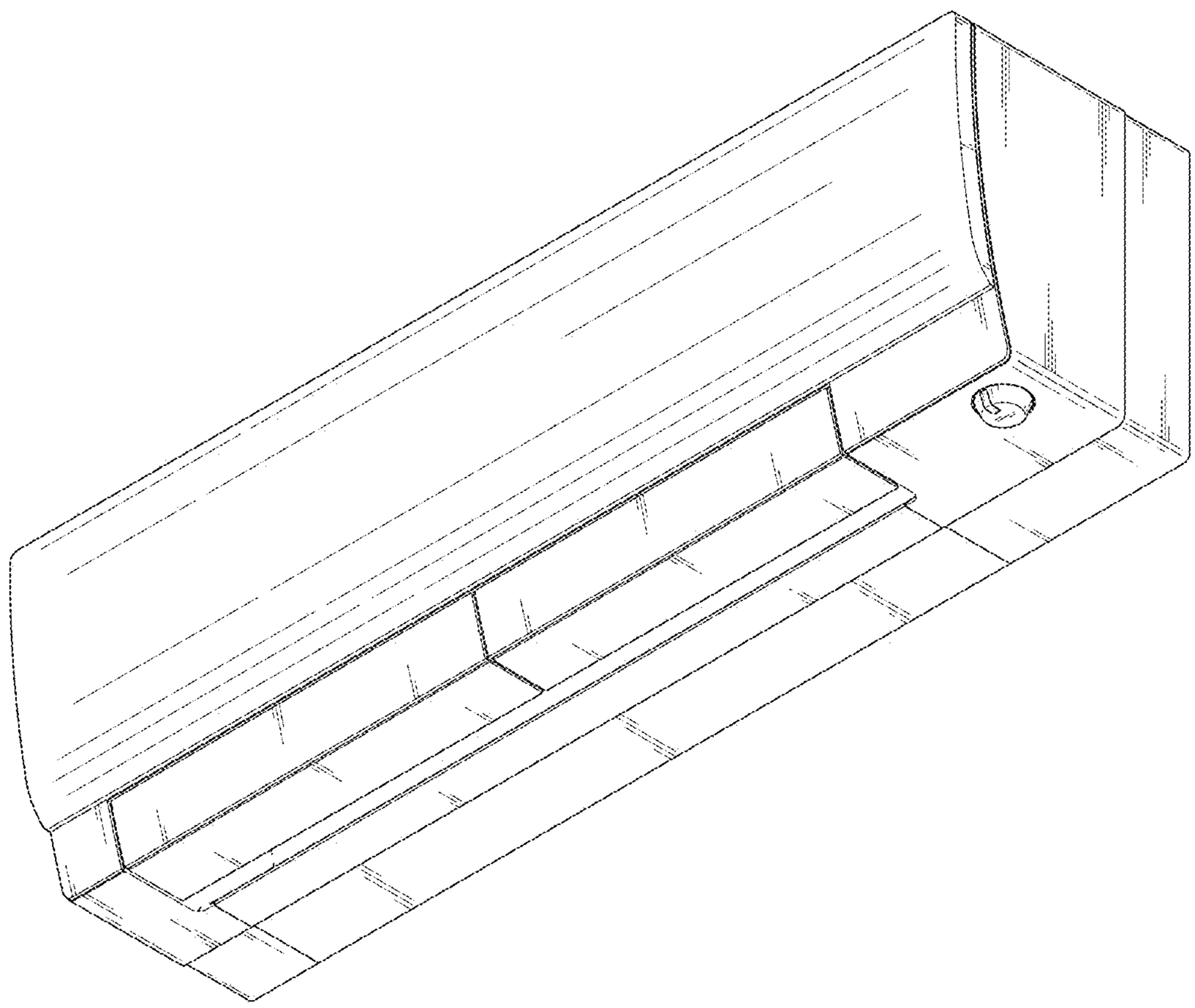

Fig.2

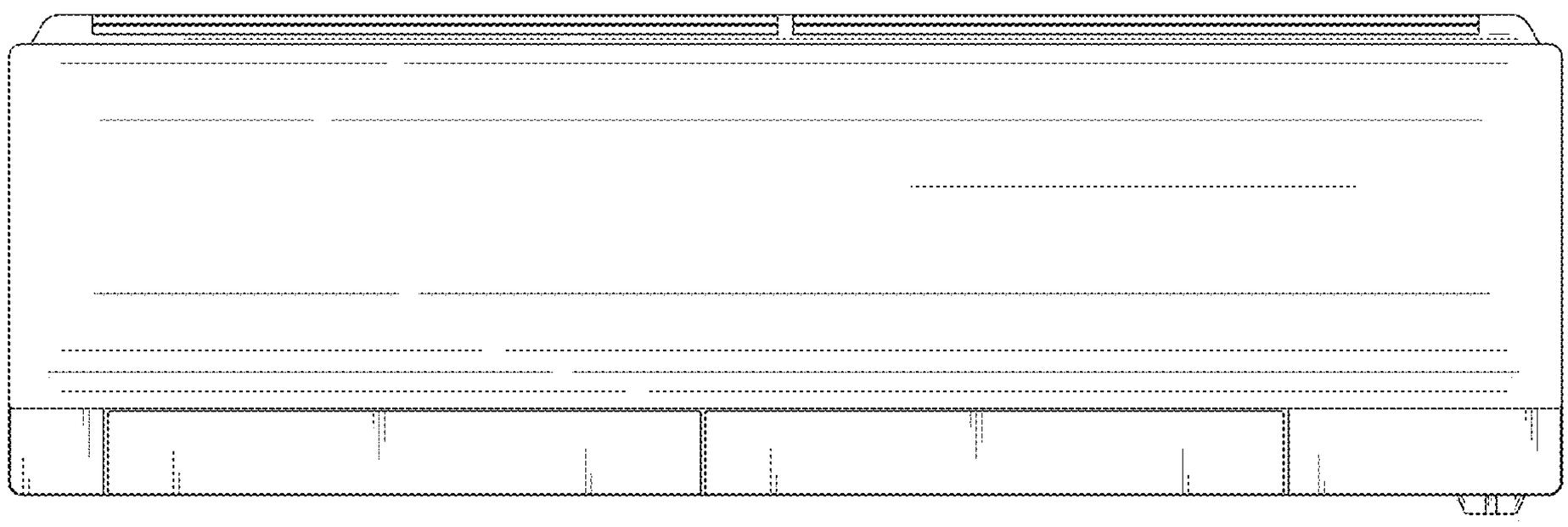

Fig.3

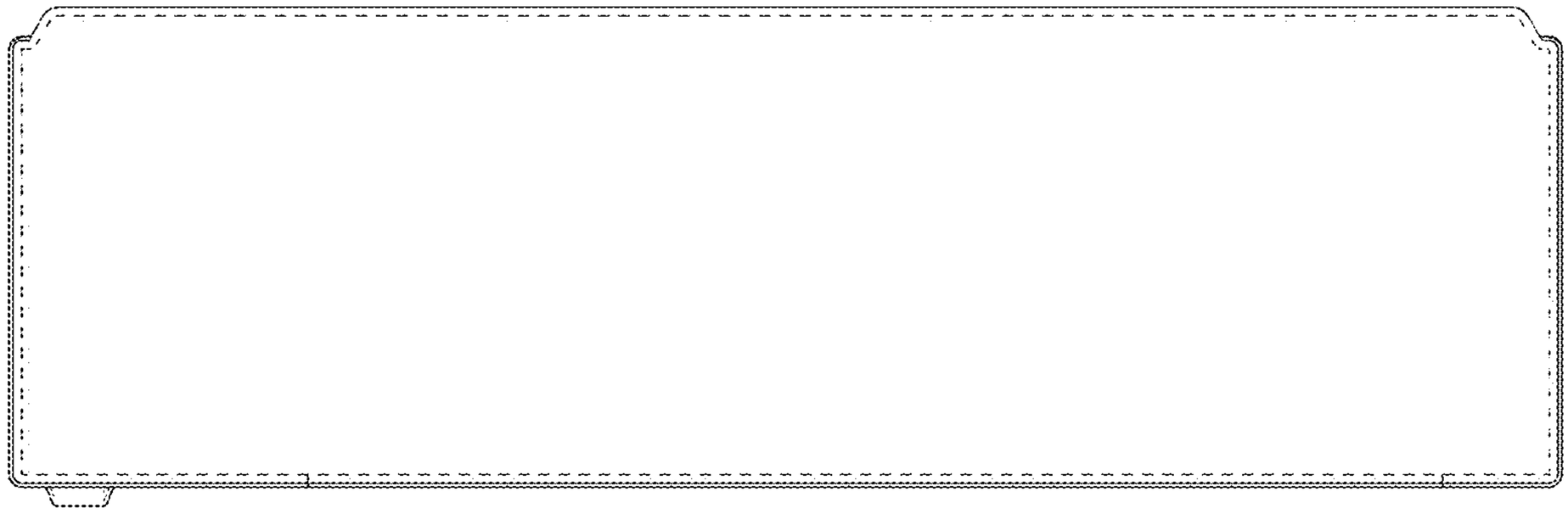

Fig.4

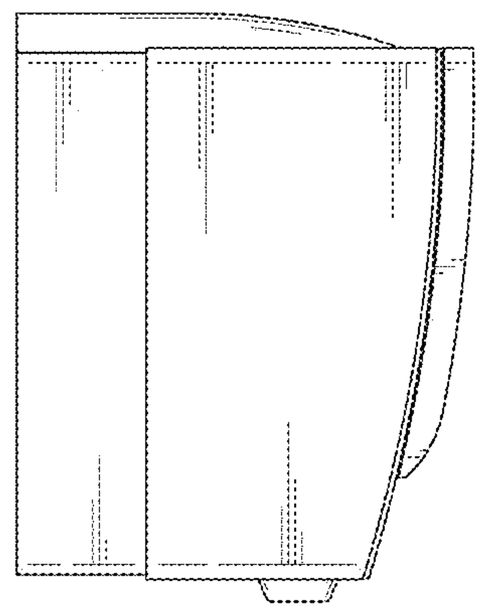

Fig.5

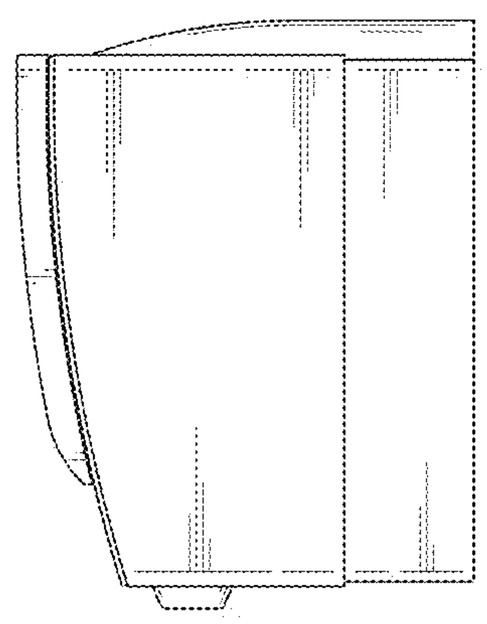

Fig.6

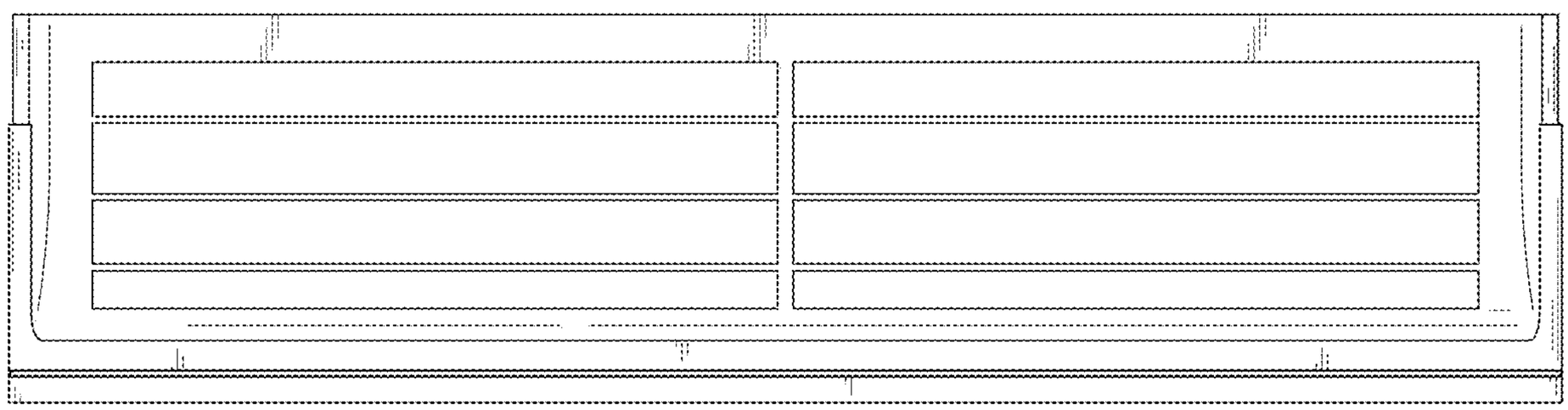
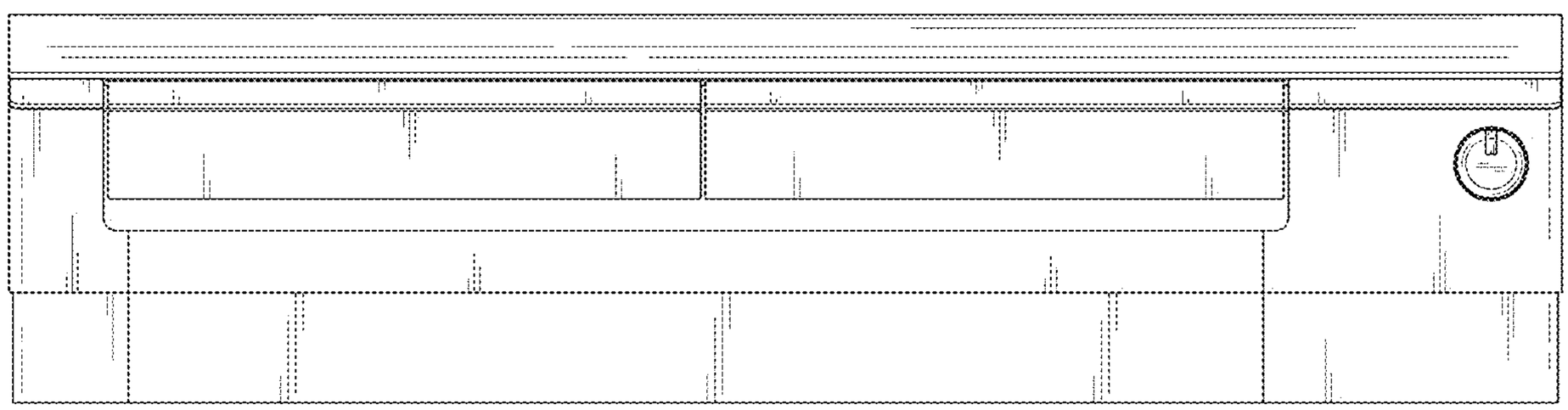
Fig.7