US00D973855S

(12) United States Design Patent
Whipple et al.

(10) Patent No.: US D973,855 S
(45) Date of Patent: ** Dec. 27, 2022

(54) **INTERCOOLER CORE**

(71) Applicant: **Whipple Industries, Inc.**, Fresno, CA (US)

(72) Inventors: **Dustin E. Whipple**, Fresno, CA (US); **Garrett Wayne Bright**, Clovis, CA (US)

(73) Assignee: **WHIPPLE INDUSTRIES, INC.**, Fresno, CA (US)

(**) Term: **15 Years**

(21) Appl. No.: **29/754,629**

(22) Filed: **Oct. 13, 2020**

(51) **LOC (13) Cl.** **23-04**

(52) **U.S. Cl.**
USPC **D23/351**

(58) **Field of Classification Search**
USPC D23/314, 330, 328, 324, 341, 395; 165/174, 175, 48.1, 41, 61, 42, 43; 237/70, 49; 180/68.4, 68.1, 68.3, 229; D13/112, 113, 114, 115, 122; D12/163, D12/166, 177, 197, 216
CPC ... F28F 1/022; F28F 9/26; F28F 1/025; F02B 29/0475; F02B 9/0412; F02B 29/0462; F02M 31/20; F28D 7/1692; F28D 7/0075; F28D 2021/0082
See application file for complete search history.

(56) **References Cited**

U.S. PATENT DOCUMENTS

D263,461	S	*	3/1982	Young	D12/166
D265,403	S	*	7/1982	Gewelber	D15/5
D534,185	S	*	12/2006	Chan	D15/5
D619,511	S	*	7/2010	Sullivan	D12/166
D621,016	S	*	8/2010	Garcia	D23/330
D647,436	S	*	10/2011	Sullivan	D12/166
D703,126	S	*	4/2014	Tafe	D12/223
D717,218	S	*	11/2014	Tafe	D12/166
D717,702	S	*	11/2014	McCardle	D12/166
D746,732	S	*	1/2016	Pruitt	D12/166
D751,472	S	*	3/2016	Pruitt	D12/166

(Continued)

FOREIGN PATENT DOCUMENTS

TR 201502412-0007 * 5/2015

OTHER PUBLICATIONS

"Mishimoto Performance Aluminum Radiator", https://www.americanmuscle.com/mishimoto-mustang-radiator-1516eco.html#customer_reviews, review date: Jul. 4, 2016, retrieved Jul. 20, 2022. (Year: 2016).*

(Continued)

Primary Examiner — Amy C Wierenga
Assistant Examiner — Andrea Marie McKay
(74) *Attorney, Agent, or Firm* — Procopio Cory Hargreaves and Savitch LLP

(57) **CLAIM**

The ornamental appearance of an intercooler core, as shown and described.

DESCRIPTION

FIG. **1** is a top perspective view of an intercooler core.
FIG. **2** is a bottom perspective view of the intercooler core.
FIG. **3** is a front elevational view of the intercooler core.
FIG. **4** is a rear elevational view of the intercooler core.
FIG. **5** is a top plan view of the intercooler core.
FIG. **6** is a bottom plan view of the intercooler core.
FIG. **7** is a left side elevational view of the intercooler core; and,
FIG. **8** is a right side elevational view of the intercooler core.
The broken lines shown in the drawings depict portions of the intercooler core that form no part of the claimed design.

1 Claim, 6 Drawing Sheets

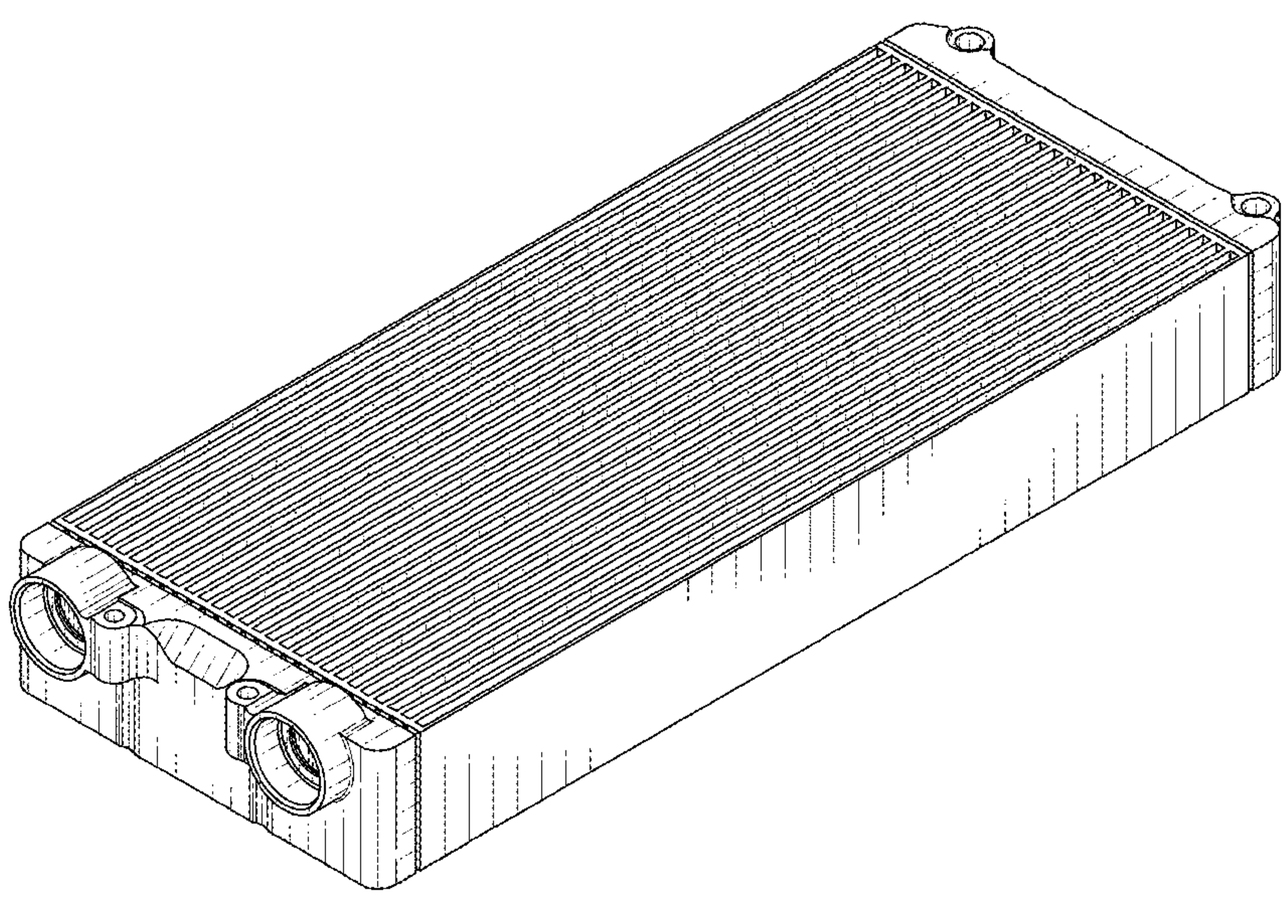

(56) **References Cited**

U.S. PATENT DOCUMENTS

D802,492	S	*	11/2017	Pruitt	D12/166
D802,493	S	*	11/2017	Pruitt	D12/166
D802,494	S	*	11/2017	Pruitt	D12/166
D802,495	S	*	11/2017	Pruitt	D12/166
D890,642	S	*	7/2020	Wettig	D12/166
D890,643	S	*	7/2020	Tafe	D12/166
D891,318	S	*	7/2020	Platt, Jr.	D15/5
D905,116	S	*	12/2020	Liu	D15/5
D905,759	S	*	12/2020	Wettig	D15/5
D911,226	S	*	2/2021	Tafe	D12/166
D912,702	S	*	3/2021	Wettig	D15/5
D920,382	S	*	5/2021	Tafe	D15/5
D921,043	S	*	6/2021	Tafe	D15/5
D931,336	S	*	9/2021	Tafe	D15/5
D931,337	S	*	9/2021	Wettig	D15/5
D934,781	S	*	11/2021	Satou	D12/415
D940,013	S	*	1/2022	Wettig	D12/166
D940,014	S	*	1/2022	Wettig	D12/166
D957,461	S	*	7/2022	Liu	D15/5
D957,465	S	*	7/2022	Tafe	D15/5
11,392,670	B1	*	7/2022	Thiers	G06F 19/36
2011/0155358	A1	*	6/2011	Galahroudi	F28F 9/0214 165/173
2014/0360704	A1	*	12/2014	Kim	F28D 1/0435 165/140
2019/0331021	A1		10/2019	Whipple et al.	
2019/0331022	A1	*	10/2019	Whipple	F02B 29/0462
2020/0271396	A1	*	8/2020	Bright	F02B 29/0475

OTHER PUBLICATIONS

Whipple Superchargers; "Stock Vs. the Whipple Mega Cooler!!" Posted on Facebook Jul. 16, 2022; Visited Online Jul. 27, 2022; https://www.facebook.com/whipplesuperchargers/ (Year: 2022).*

Spectra Premium CU1826 Complete Radiator, available on Amazon.com, Date First Available: Jul. 23, 2007 [online] [site visited on Aug. 31, 2022] Available from the internet URL: https://www.amazon.com/Spectra-Premium-CU1826-Complete-Radiator/dp/B000C7TU52/ref=sr_1_21?c=ts&keywords=Automotive+Replacement+Engine+Radiators&qid=1661952094&s=automotive&sr=1-21 &ts_id=15725431 (Year: 2007).*

* cited by examiner

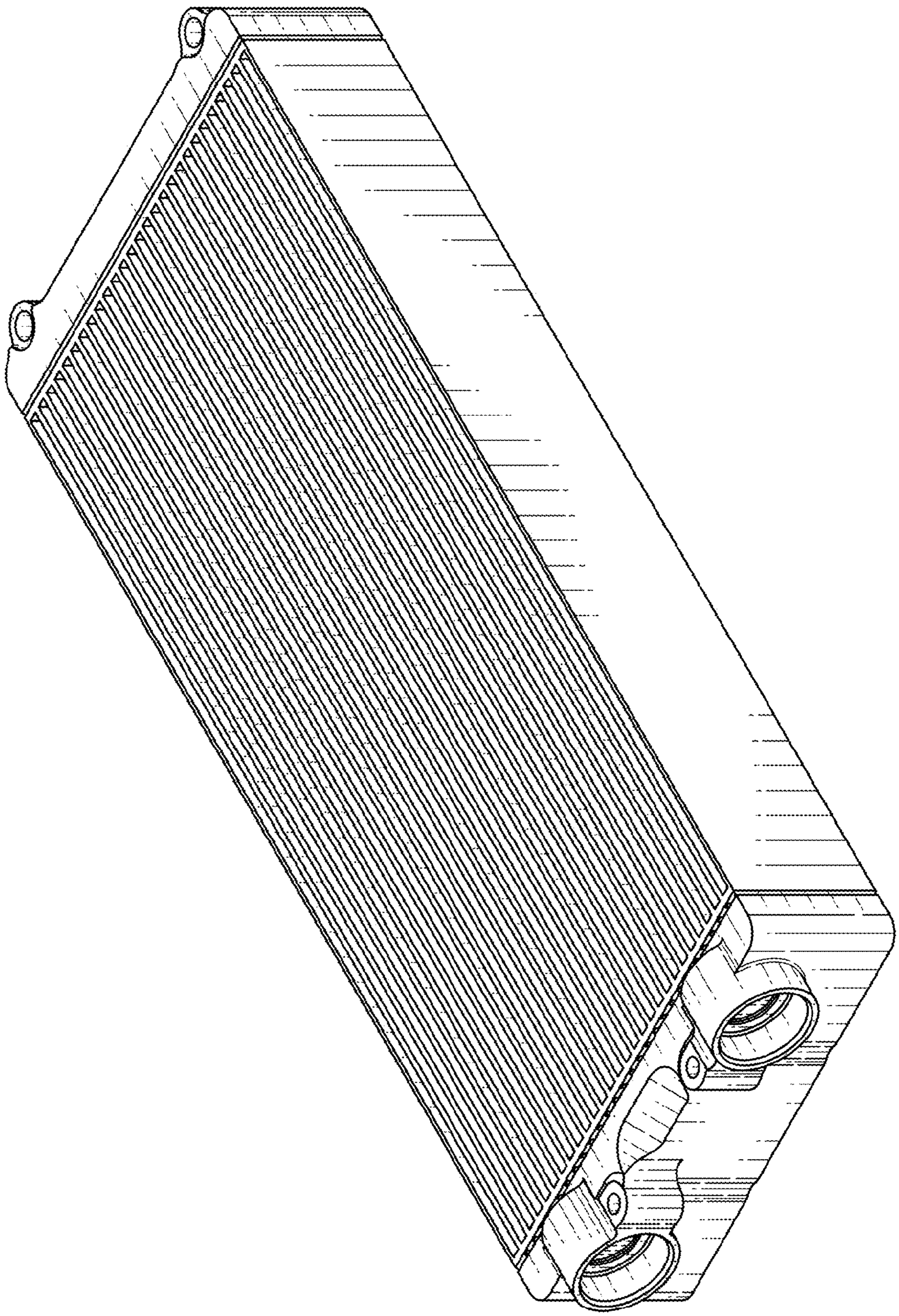

FIG. 1

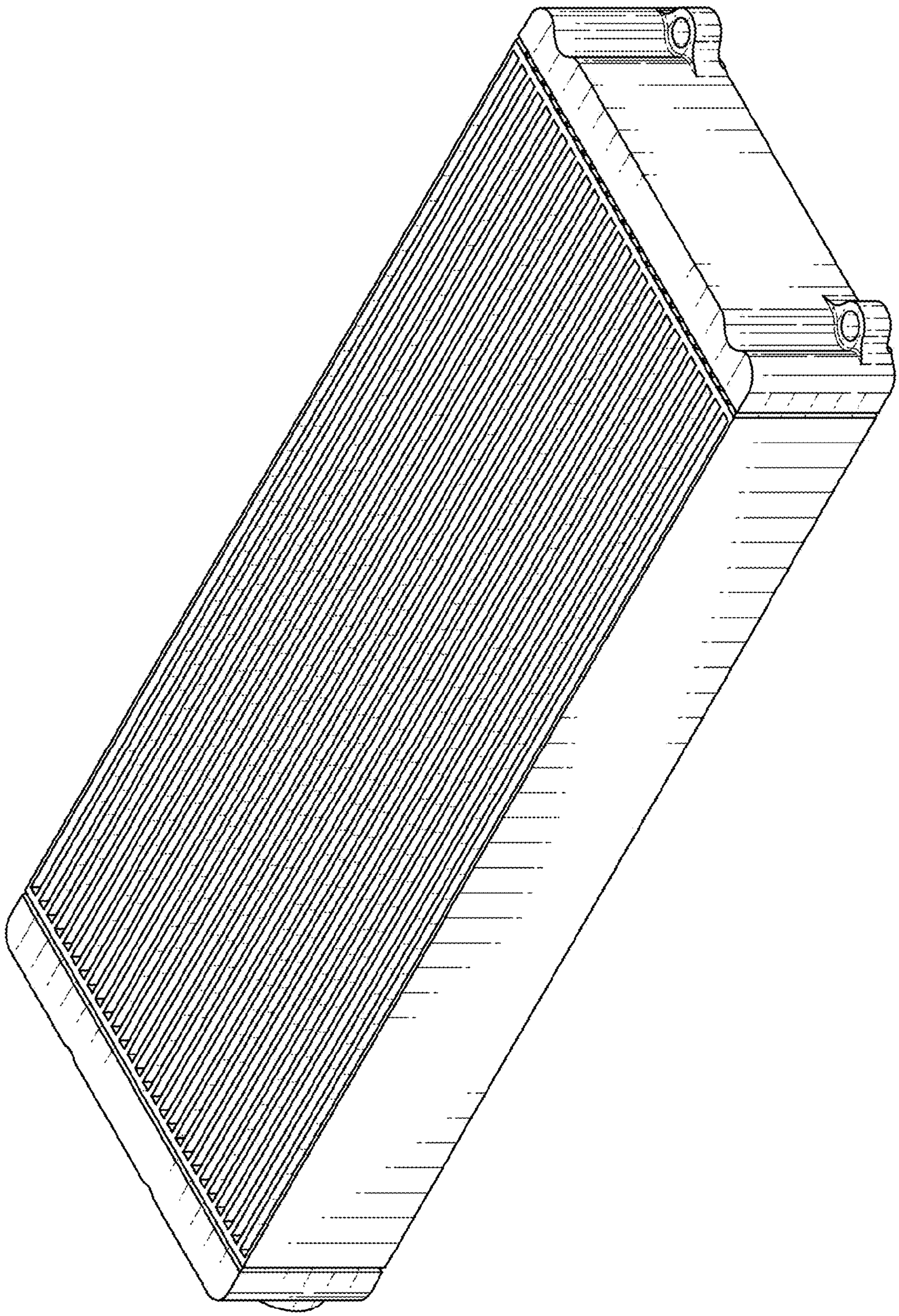

FIG. 2

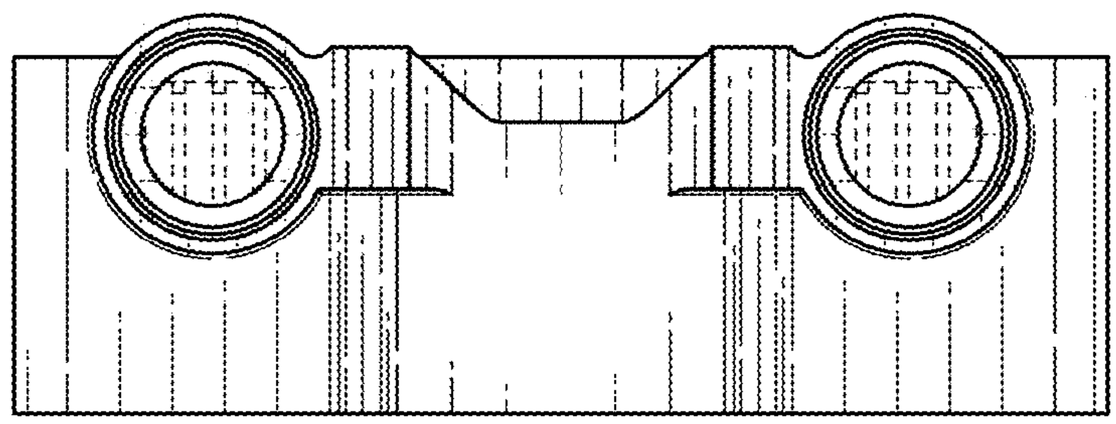

FIG. 3

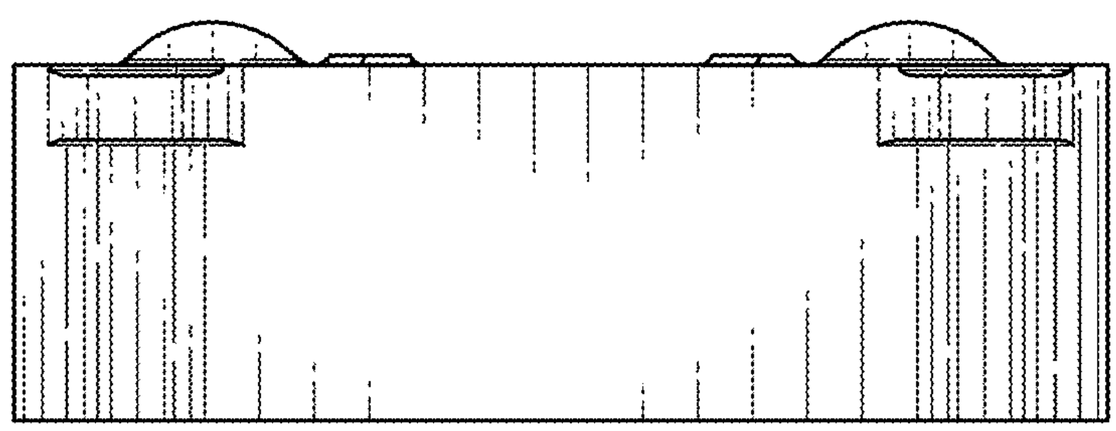

FIG. 4

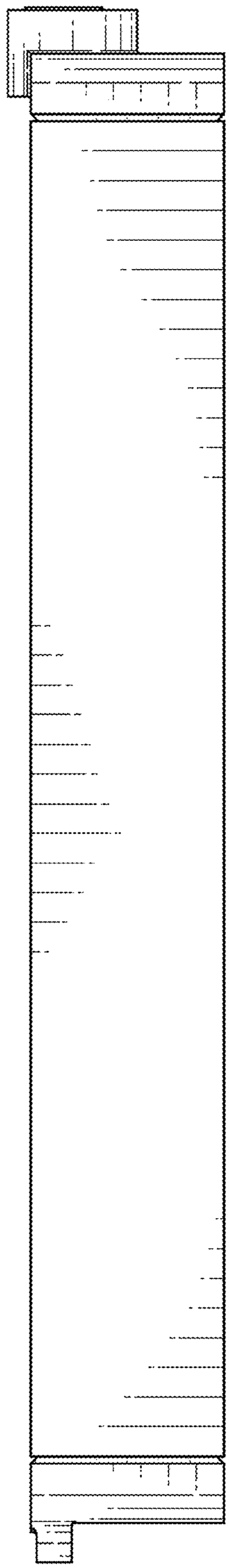

FIG. 5

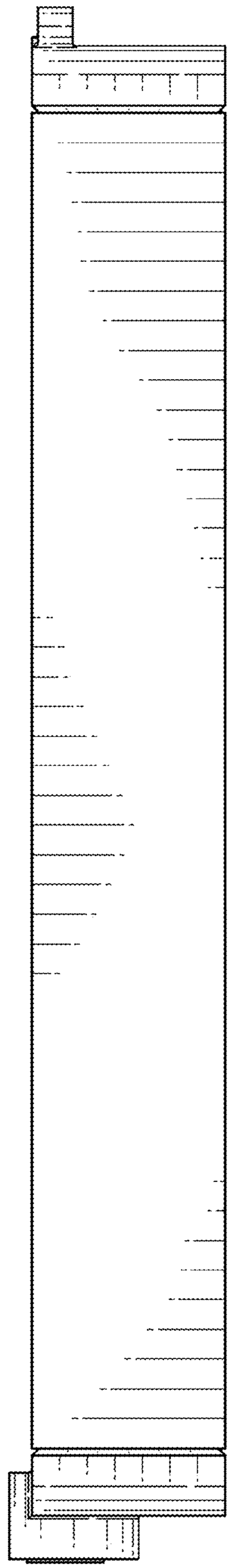

FIG. 6

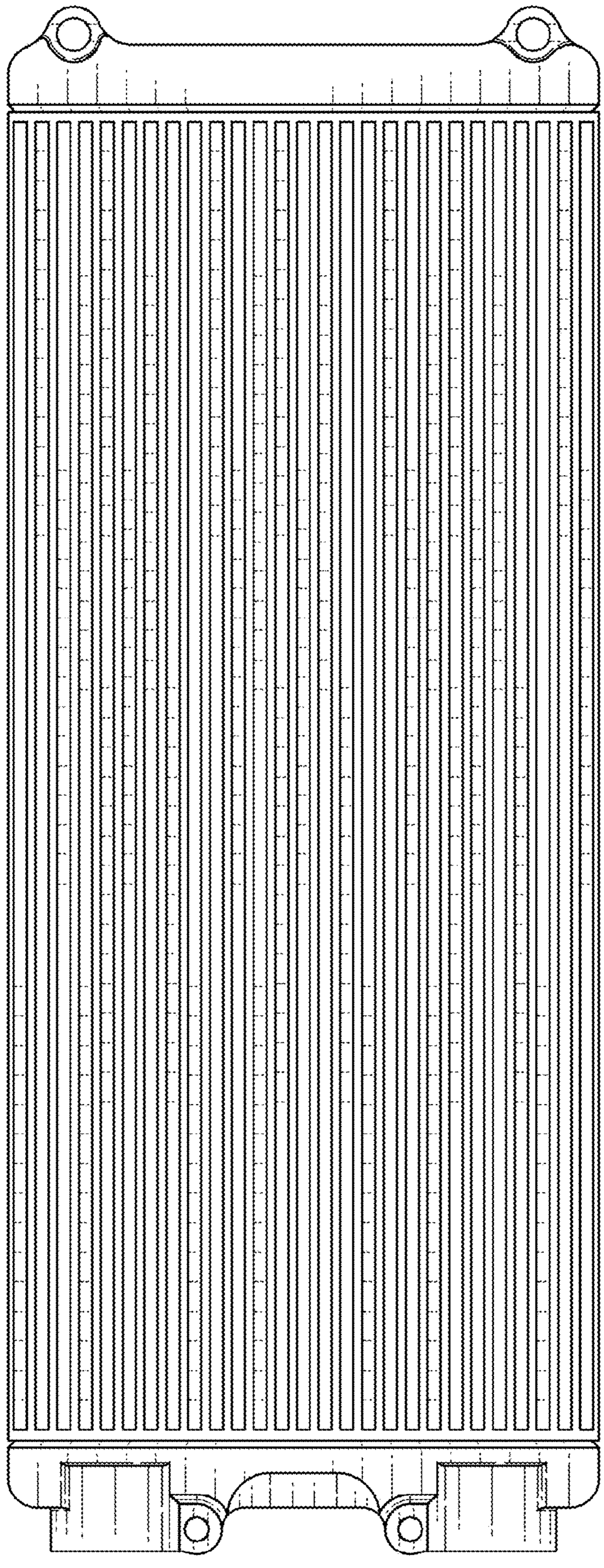

FIG. 7

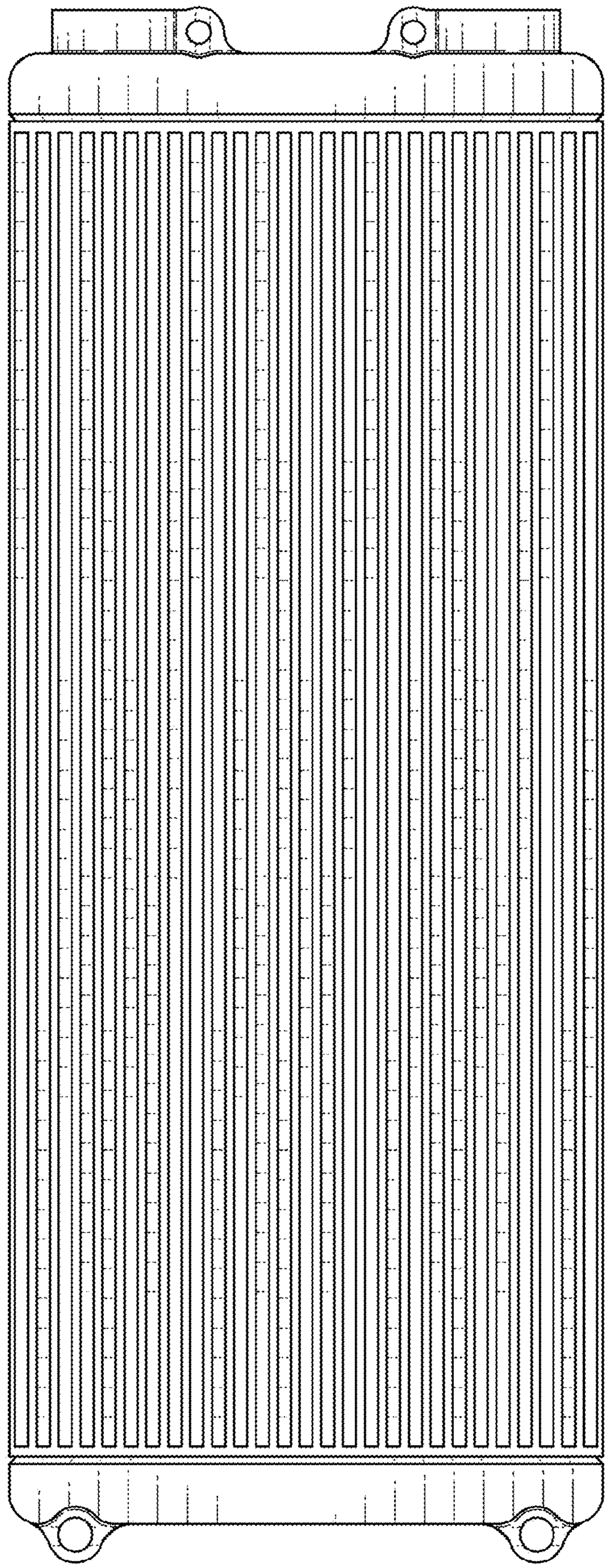

FIG. 8