US00D973429S

(12) United States Design Patent

Inyang et al.

(10) Patent No.: US D973,429 S
(45) Date of Patent: ** Dec. 27, 2022

(54) **LID FOR A BEVERAGE CONTAINER**

(71) Applicant: **Factory Enova, LLC**, Fountain Valley, CA (US)

(72) Inventors: **Seth Imo Inyang**, Anaheim, CA (US); **Vinh Lieu**, Fountain Valley, CA (US); **Feifei Wang**, Tongkang (CN)

(73) Assignee: **Factory Enova, LLC**, Fountain Valley, CA (US)

(**) Term: **15 Years**

(21) Appl. No.: **29/769,535**

(22) Filed: **Feb. 5, 2021**

(51) **LOC (13) Cl.** **07-99**

(52) **U.S. Cl.**
USPC **D7/392.1**

(58) **Field of Classification Search**
USPC D7/387, 391, 392, 392.1, 396.1, 396.2, D7/397; D9/434, 435, 436, 443, 447, D9/448, 449, 439, 440, 454
CPC A45F 3/18; C02F 2201/3222; B65D 2251/0003; B65D 2251/0015; B65D
(Continued)

(56) **References Cited**

U.S. PATENT DOCUMENTS

D387,621 S * 12/1997 Sullivan D7/510
D405,654 S 2/1999 Moran
D406,495 S 3/1999 Moran
(Continued)

FOREIGN PATENT DOCUMENTS

WO 2013090803 A1 6/2013
WO 2015170302 A2 11/2015

OTHER PUBLICATIONS

Tzoieo Straw Lid for Hydroflask: Announced Aug. 22, 2021(online). Site Visited [May 6, 2022]. Available from Internet URL: https://www.amazon.com/Tzuoieo-Compatible-Hydroflask-Replacement-Accessories/dp/B09DBGDLGC/ref=sr_1_36?crid=2G8EQD7E4KK4W&keywo%E2%80%A6%201/7.*
(Continued)

Primary Examiner — Catherine S Posthauer
(74) *Attorney, Agent, or Firm* — iPA & iPM

(57) **CLAIM**

The ornamental design for a lid for a beverage container, as shown and described.

DESCRIPTION

FIG. **1** is a back, right and top perspective view of a lid for a beverage container with its spout and handle extended, showing our new design, with environmental subject matter of a beverage container and a hand;
FIG. **2** is a front, left and top perspective view thereof, but without the environmental subject matter of FIG. **1**;
FIG. **3** is a front elevational view thereof;
FIG. **4** is a rear elevational view thereof;
FIG. **5** is a right side elevational view thereof, the left side elevational view being a mirror image thereof;
FIG. **6** is a top plan view thereof;
FIG. **7** is a bottom plan view thereof;
FIG. **8** is a front elevational view thereof, but showing its spout and handle retracted;
FIG. **9** is a rear elevational view thereof;
FIG. **10** is a right side elevational view thereof, the left side elevational view being a mirror image thereof;
FIG. **11** is a top plan view thereof; and,
FIG. **12** is a bottom plan view thereof.
The broken lines are shown for the purpose of illustrating parts of the article as well as exemplary environmental subject matter. None of the broken lines form part of the claimed design.
The Elemental logo shown in the drawings, and forming no part of the claim, is a registered trademark of Factory eNova, LLC.

1 Claim, 6 Drawing Sheets

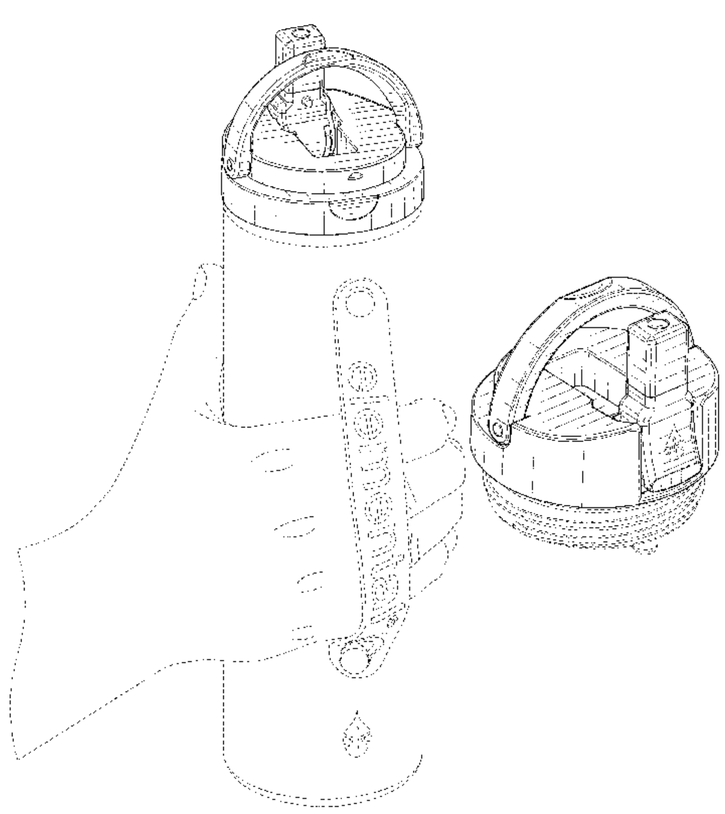

(58) **Field of Classification Search**
CPC ... 2251/0078; B65D 2251/08; B65D 47/0885; B65D 47/0876; A47G 19/2272
See application file for complete search history.

(56) **References Cited**

U.S. PATENT DOCUMENTS

D458,800	S		6/2002	Kotsonis	
D516,424	S		3/2006	Schweigert et al.	
D609,046	S		2/2010	Valderrama et al.	
D655,090	S		3/2012	Puckett et al.	
D656,360	S		3/2012	Miller et al.	
D658,059	S		4/2012	Bailey	
D734,092	S		7/2015	Kristinik	
9,114,920	B1		8/2015	Edelman et al.	
D739,240	S		9/2015	Satterfield et al.	
D766,652	S		9/2016	Joseph et al.	
D784,072	S		4/2017	Baron et al.	
D788,583	S		6/2017	Tu	
D789,140	S		6/2017	Joseph	
D792,738	S		7/2017	Savenok	
9,908,667	B1		3/2018	Smith et al.	
D815,487	S		4/2018	Chitayat et al.	
D817,092	S		5/2018	Pisarevsky	
D845,064	S		4/2019	Mulhauser et al.	
D867,134	S		11/2019	Savenok	
D868,534	S	*	12/2019	Lin	D7/392.1
D872,522	S	*	1/2020	Diener	D9/449
D872,524	S	*	1/2020	Bo	D7/392.1
D886,517	S	*	6/2020	Bo	D7/392.1
D887,776	S	*	6/2020	Bo	D7/392.1
D893,245	S	*	8/2020	Zhang	D7/392.1
D894,672	S	*	9/2020	Huang	D9/450
D897,146	S	*	9/2020	Lane	D7/392
D897,761	S	*	10/2020	Zhang	D9/450
D900,539	S	*	11/2020	Yao	D7/392.1
D900,541	S		11/2020	Inyang et al.	
D903,405	S	*	12/2020	Zhang	D7/392.1
D906,042	S	*	12/2020	Chen	D9/450
D911,100	S	*	2/2021	Chen	D9/450
D922,819	S	*	6/2021	Wang	D9/450
D924,000	S	*	7/2021	Chen	D7/392.1
D930,427	S	*	9/2021	Ayres	D7/392.1
D935,264	S	*	11/2021	Kutlug	D7/392.1
D935,837	S	*	11/2021	Wang	D7/392.1
D938,778	S	*	12/2021	Ge	D9/450
D940,501	S	*	1/2022	Burga	D7/392.1
D945,819	S	*	3/2022	Jacobsen	D7/392.1
2018/0042413	A1		2/2018	Althaher et al.	
2018/0206660	A1		7/2018	Heiman	
2019/0039788	A1		2/2019	Chambers	

OTHER PUBLICATIONS

Factory eNOVA Water Bottle: Site Visited [May 6, 2022]. Available from Internet URL: https://www.factorye.life/listing/1180853426/personalized-32oz-water-bottle-stainless.*

Inyang et al., Unpublished Design U.S. Appl. No. 29/764,470, filed Dec. 30, 2020.

* cited by examiner

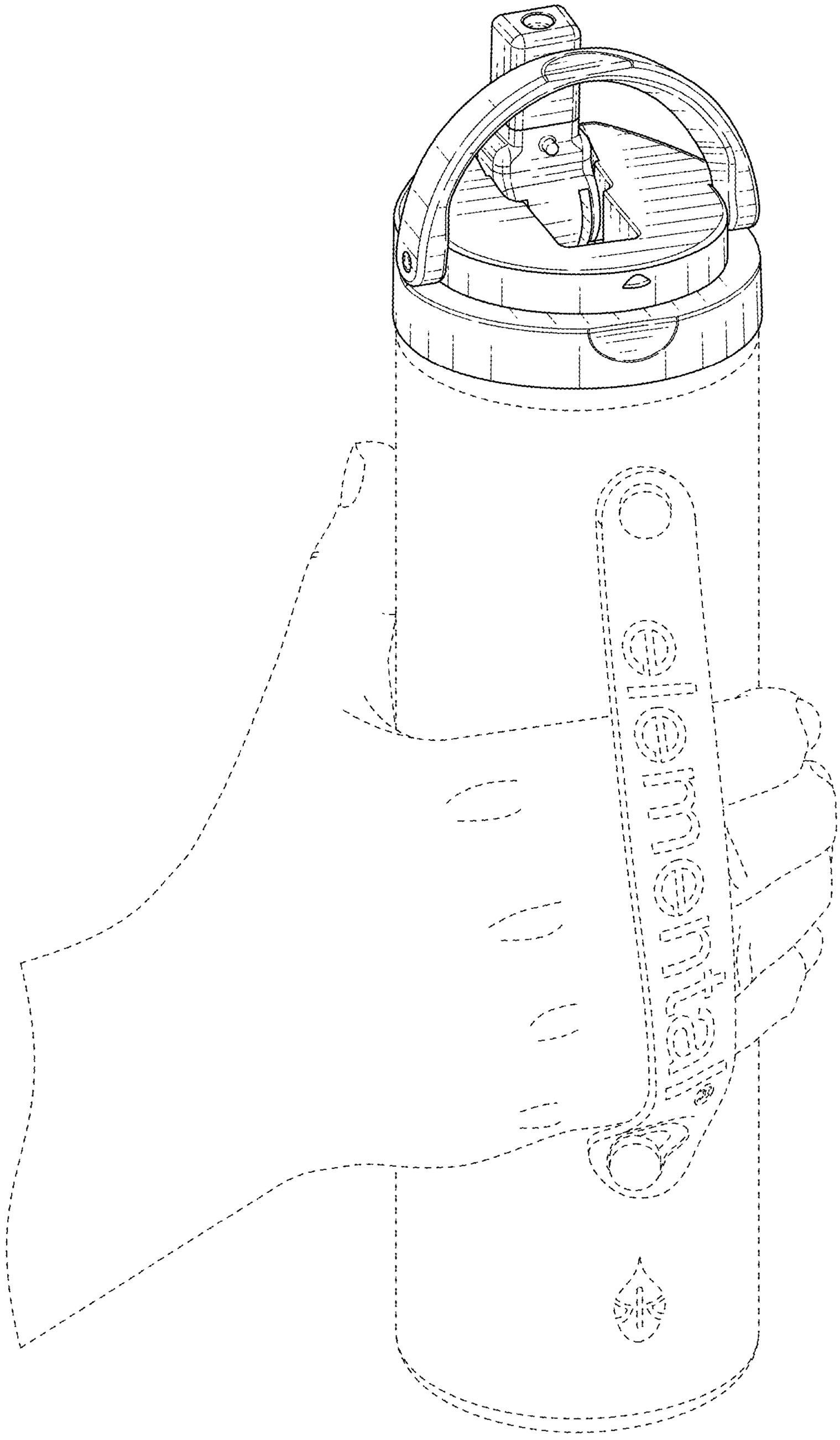

FIG. 1

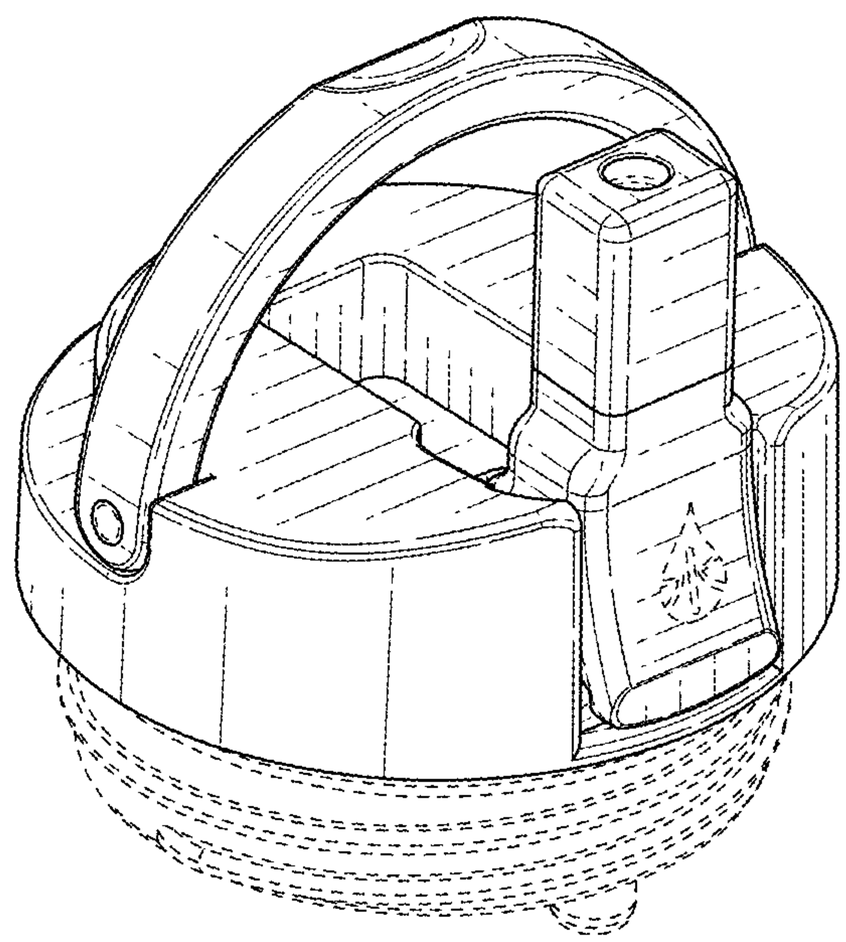

FIG. 2

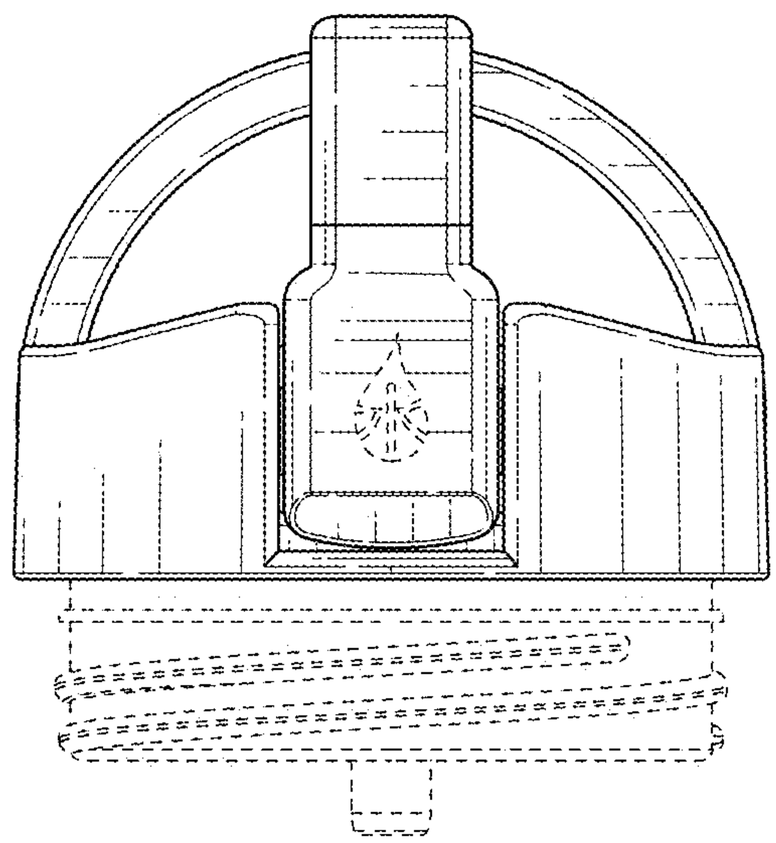

FIG. 3

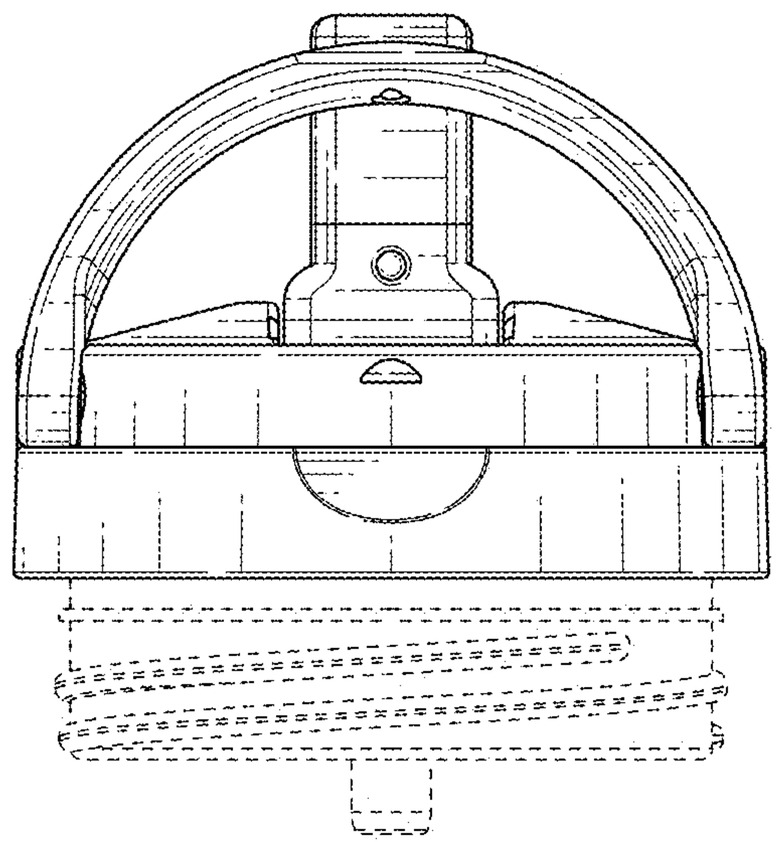

FIG. 4

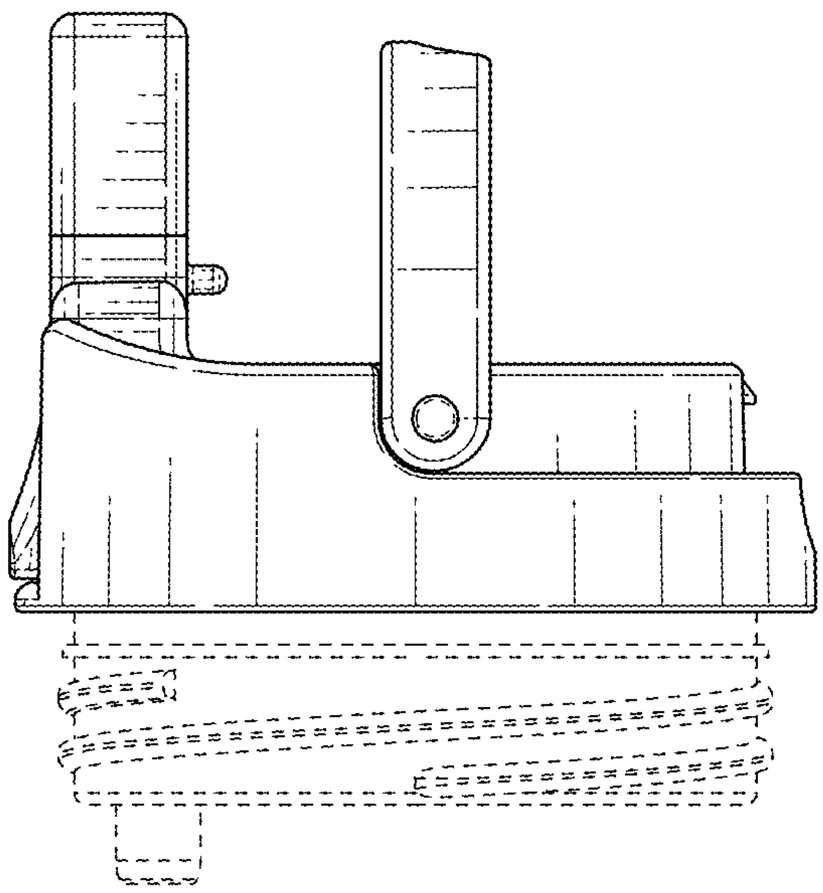

FIG. 5

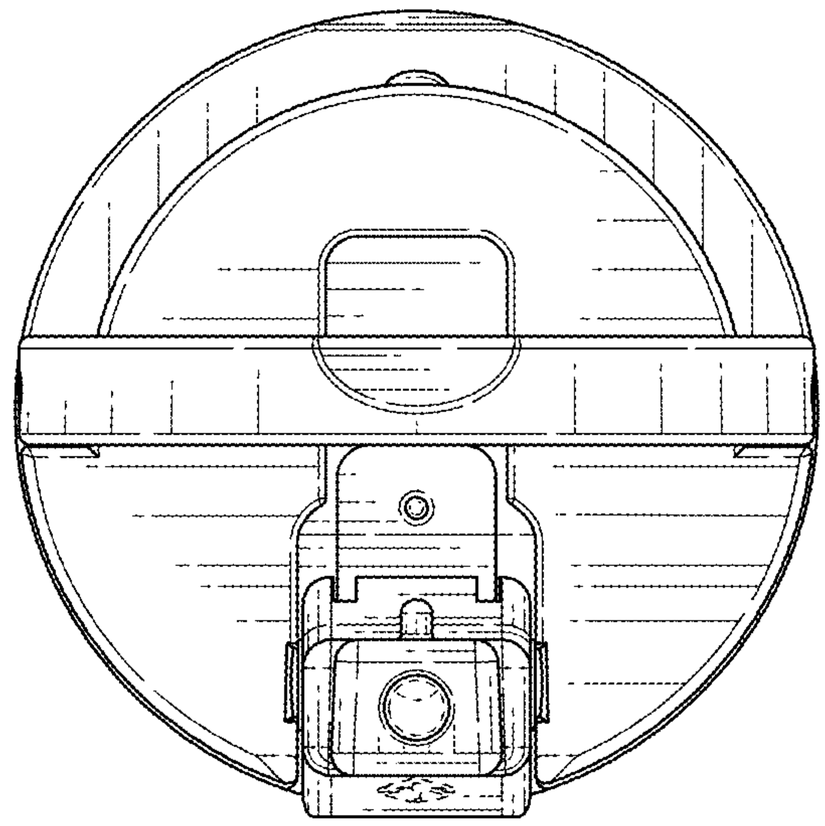

FIG. 6

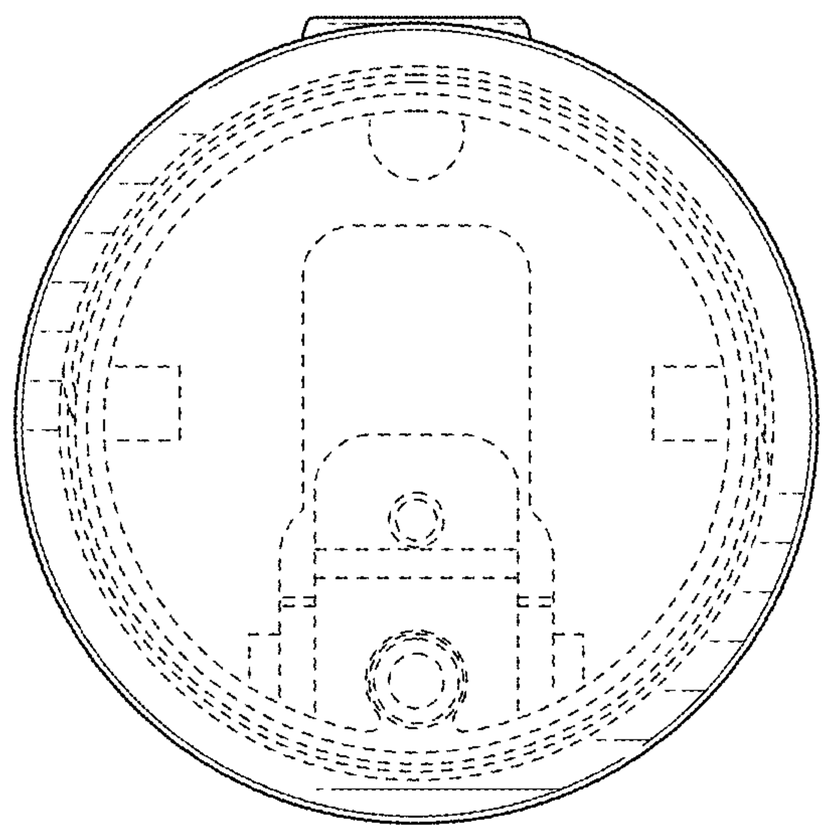

FIG. 7

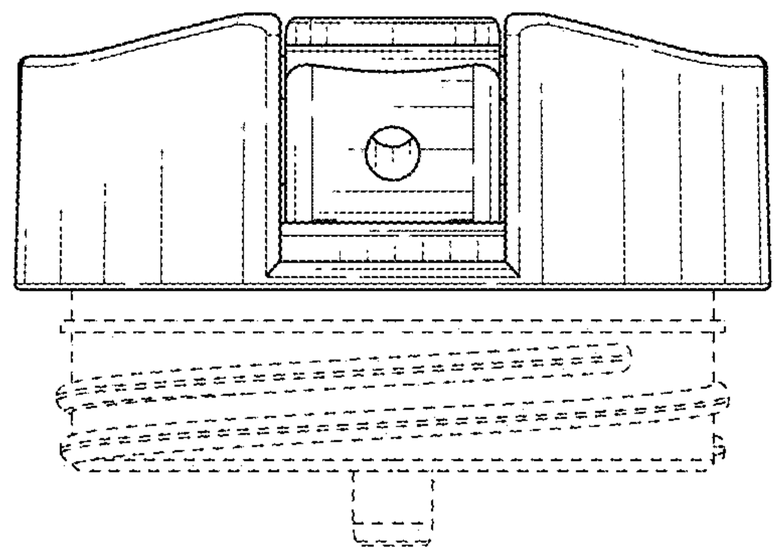

FIG. 8

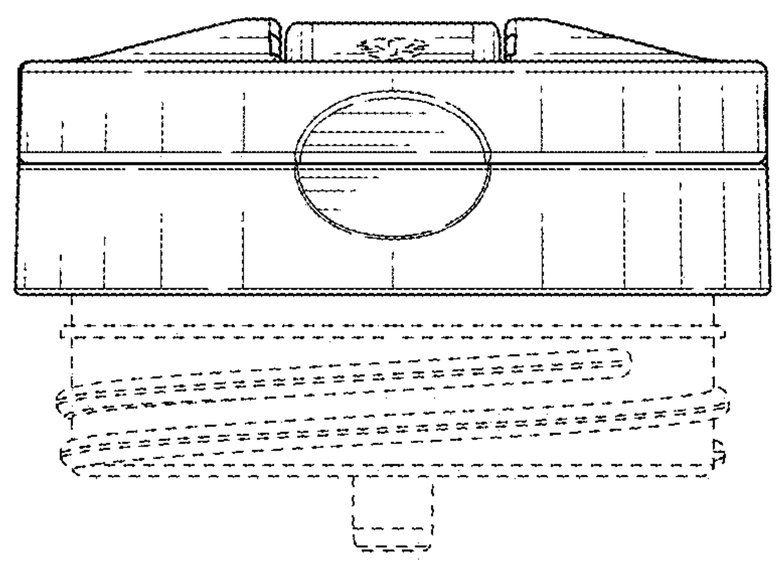

FIG. 9

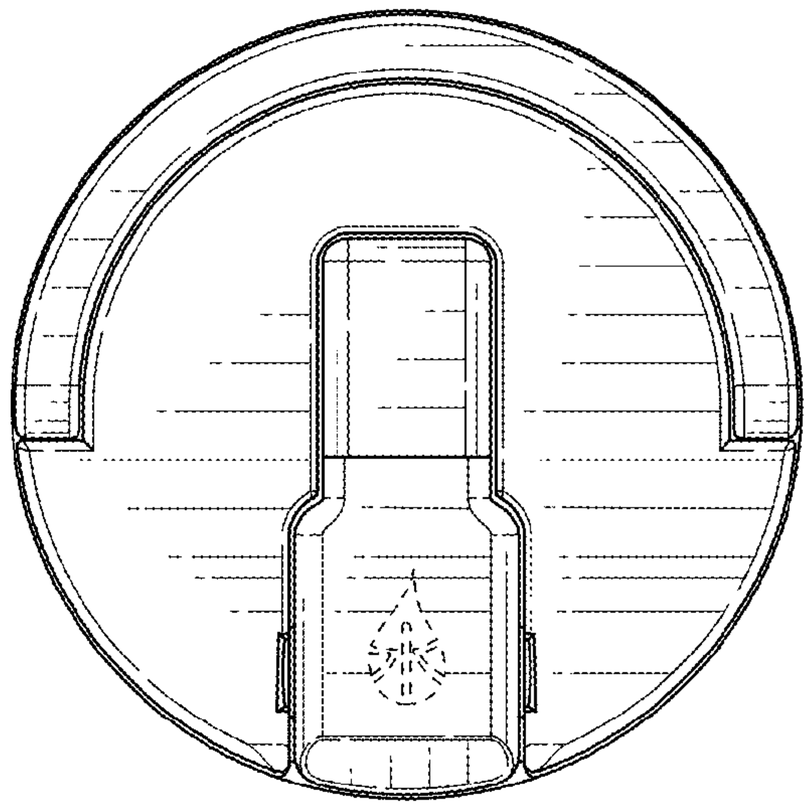

FIG. 11

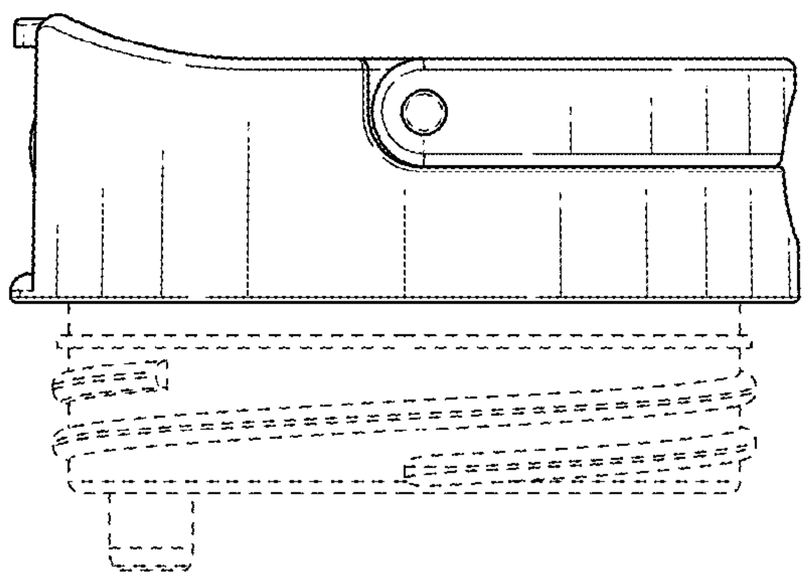

FIG. 10

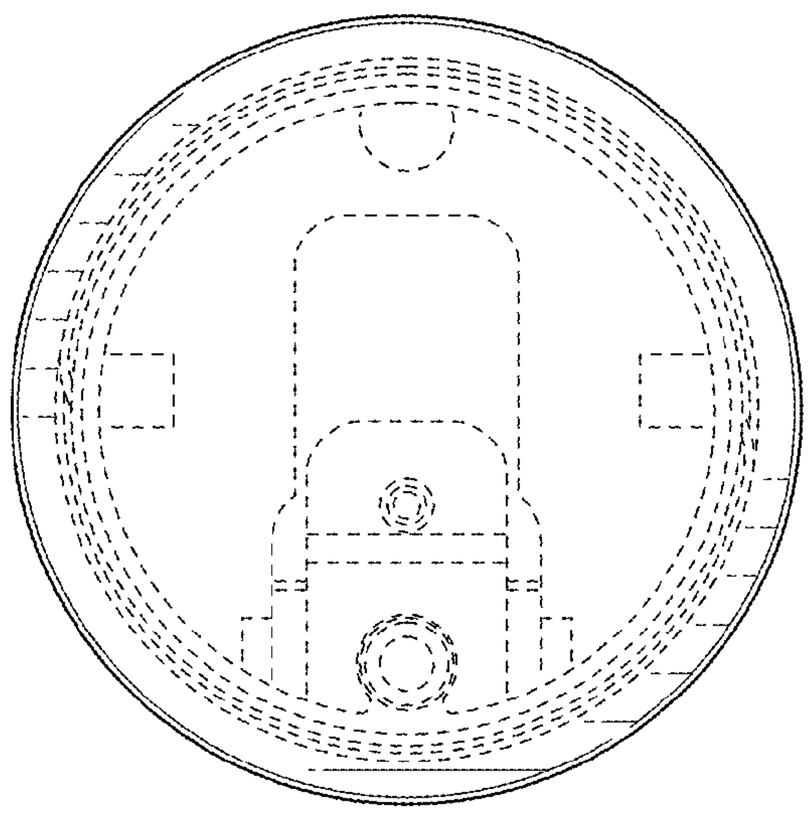

FIG. 12