US00D973365S

(12) United States Design Patent

Huen

(10) Patent No.: US D973,365 S
(45) Date of Patent: ** Dec. 27, 2022

(54) **HEATED AIR STYLING BRUSH**

(71) Applicant: **CONAIR CORPORATION**, Stamford, CT (US)

(72) Inventor: **Wai Shan Yolanda Huen**, Kowloon (HK)

(73) Assignee: **Conair LLC**, Stamford, CT (US)

(**) Term: **15 Years**

(21) Appl. No.: **29/765,900**

(22) Filed: **Jan. 12, 2021**

(51) **LOC (13) Cl.** **04-02**

(52) **U.S. Cl.**
USPC **D4/100**

(58) **Field of Classification Search**
USPC D4/100, 102, 109, 111, 117, 127, 128, D4/130, 132, 133, 138, 199; D28/15, 18, D28/24
CPC A46B 2200/104; A46B 2200/1006; A46B 2200/10; A46B 15/003; A45D 20/48; A45D 1/04; A45D 24/007; A45D 2/001; A45D 2/002
See application file for complete search history.

(56) **References Cited**

U.S. PATENT DOCUMENTS

D455,905	S		4/2002	McCurrach
D457,730	S		5/2002	McCurrach
6,725,562	B2		4/2004	Nakagawa et al.
7,171,970	B2		2/2007	Saida et al.
9,578,943	B2		2/2017	Guy-Rabi et al.
9,591,906	B2		3/2017	Guy-Rabi et al.
D795,595	S		8/2017	Exley
D804,188	S	*	12/2017	Du D28/35
D805,188	S		12/2017	Du

(Continued)

FOREIGN PATENT DOCUMENTS

EP	001135875-0002		5/2009
EP	001135875-0003		5/2009
RU	00117723	*	11/2019

OTHER PUBLICATIONS

Infinito Pro Brush, announced 2021 [online], [site visited Apr. 20, 2022]. Available from internet, URL: https://www.bedbathandbeyond.com/store/product/infinitipro-by-conair-the-knot-dr-dryer-brush-in-hot-pink-black/5602418?skuId=69720902&mcid=OS_googlepla (Year: 2021).*

(Continued)

Primary Examiner — Cynthia Ramirez
Assistant Examiner — Tamara L Hahn
(74) *Attorney, Agent, or Firm* — Ruggiero McAllister & McMahon LLC

(57) **CLAIM**

The ornamental design for a heated air styling brush, as shown and described.

DESCRIPTION

FIG. **1** is a front perspective view of an ornamental design for a heated air styling brush according to the present invention;
FIG. **2** is a right side elevational view of the heated air styling brush of FIG. **1**;
FIG. **3** is a left side elevational view of the heated air styling brush of FIG. **1**;
FIG. **4** is a front elevational view of the heated air styling brush of FIG. **1**;
FIG. **5** is a rear elevational view of the heated air styling brush of FIG. **1**;
FIG. **6** is a top plan view of the heated air styling brush of FIG. **1**; and,
FIG. **7** is a bottom plan view of the heated air styling brush of FIG. **1**.
The broken lines in the drawings depict portions of the heated air styling brush which form no part of the claimed design.

1 Claim, 6 Drawing Sheets

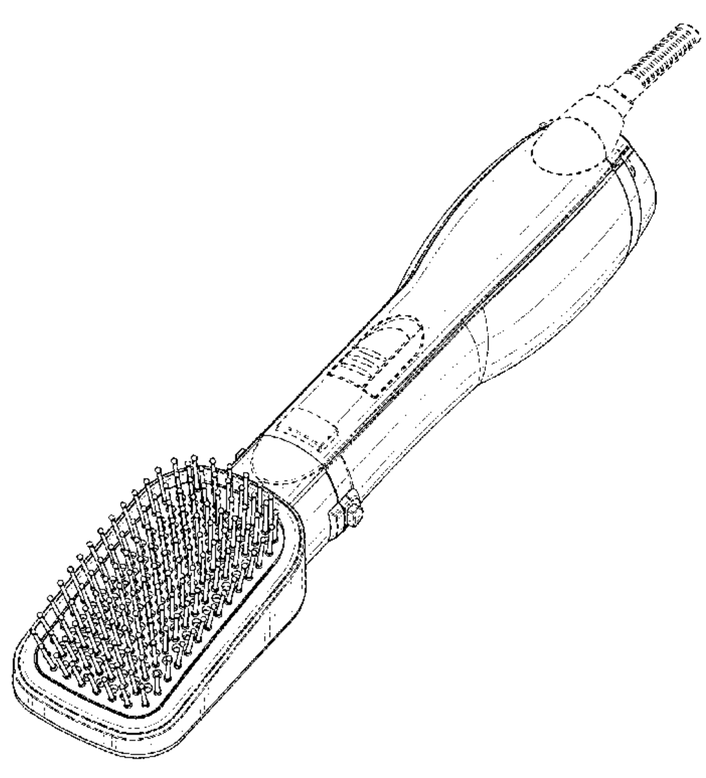

(56) **References Cited**

U.S. PATENT DOCUMENTS

D808,658	S	*	1/2018	Sophie	D28/35
9,877,562	B2		1/2018	Guy-Rabi et al.	
D815,837	S		4/2018	Zhou	
D825,929	S	*	8/2018	Julemont	D4/100
D826,567	S	*	8/2018	Yan	D4/100
D827,198	S		8/2018	Abdul	
D838,989	S		1/2019	Yan et al.	
D848,745	S		5/2019	Park	
D855,996	S	*	8/2019	Park	D4/100
10,398,218	B2		9/2019	Exley	
D889,130	S		7/2020	Yuan	
D900,391	S		10/2020	Ragosta	
D905,965	S	*	12/2020	Xie	D28/35
D906,677	S	*	1/2021	Cai	D28/35
D915,775	S	*	4/2021	Moon	D4/128
D916,368	S	*	4/2021	Koenemann	D4/133
D916,370	S	*	4/2021	Zhang	D4/133
D921,291	S	*	6/2021	Zhang	D4/133
D922,773	S	*	6/2021	Zhou	D28/35
D934,498	S	*	10/2021	Hillebrecht	D28/35
D939,219	S	*	12/2021	Hinds	D4/134
D939,834	S	*	1/2022	Hillebrecht	D28/35
D943,280	S	*	2/2022	Zou	D28/35
2008/0223387	A1		9/2008	Julemont	
2016/0227898	A1		8/2016	Wu	
2016/0262518	A1		9/2016	Guy-Rabi et al.	
2018/0055188	A1		3/2018	Potts et al.	
2020/0128935	A1		4/2020	Turner	

OTHER PUBLICATIONS

Revlon Brush, announced 2018 [online], [site visited Apr. 20, 2022]. Available from internet, URL: https://www.amazon.com/Revlon-One-Step-Limited-Dryer-Styler/dp/B07H9R7VZN/ref=rtpb_sp_bmx_dp_3n5s9a7o_sccl_9/147-5261195-6690044 (Year: 2018).*

* cited by examiner

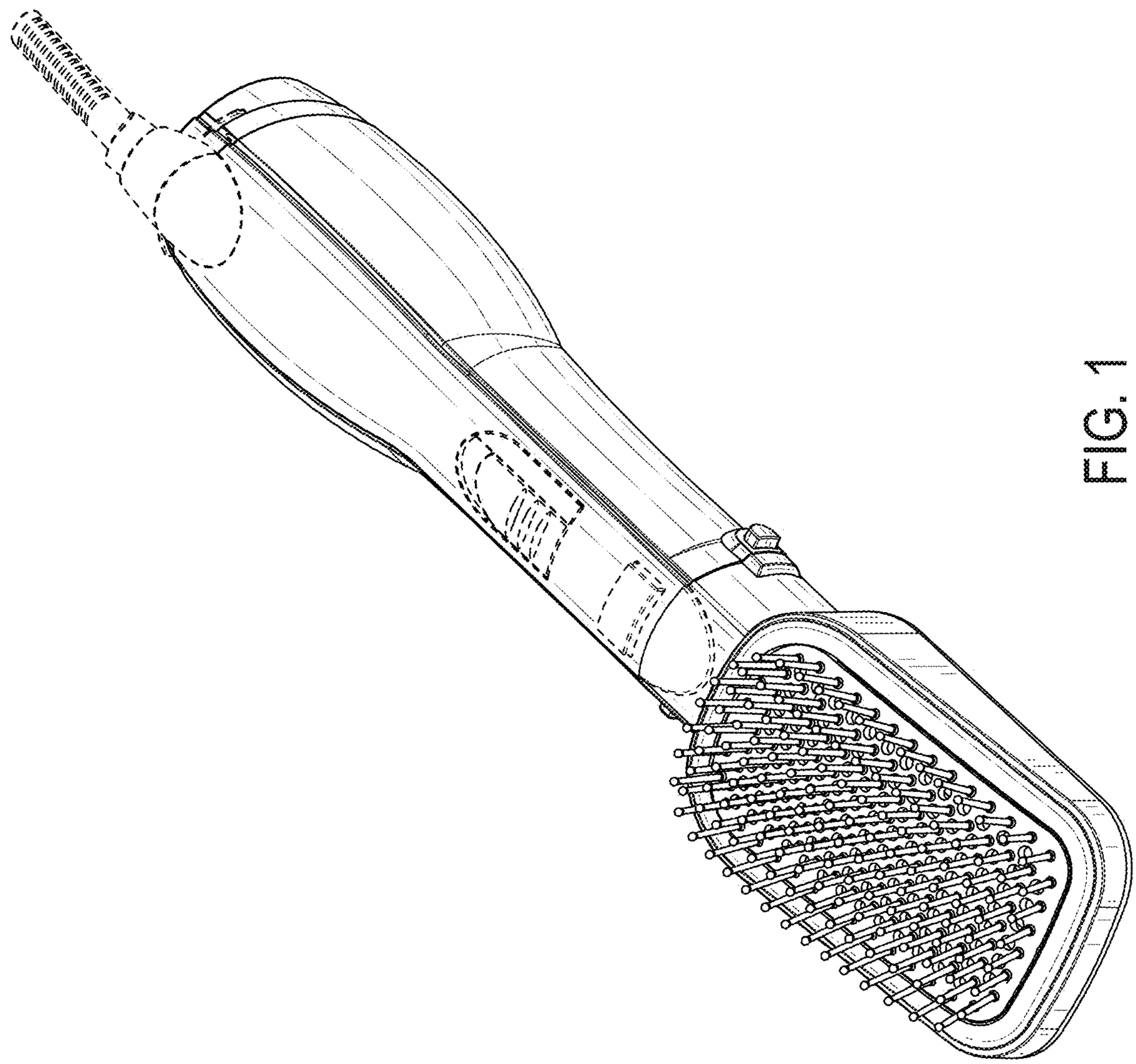

FIG. 1

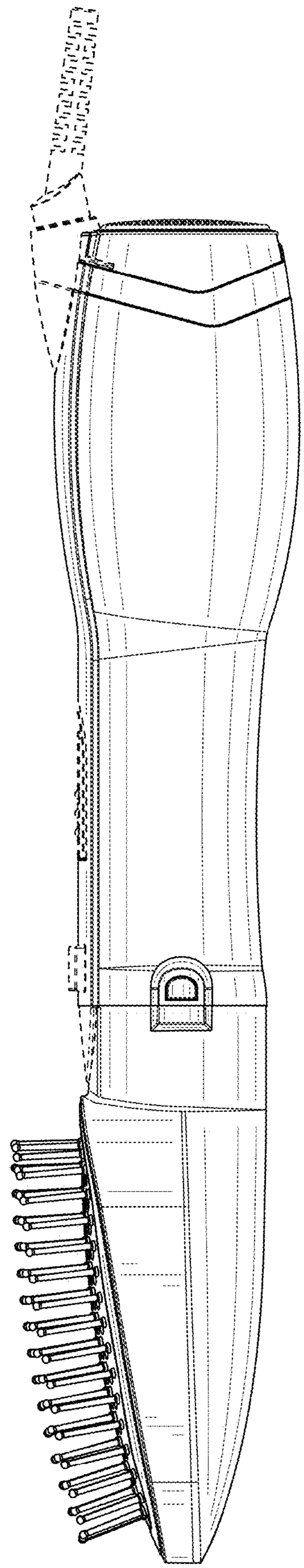

FIG. 2

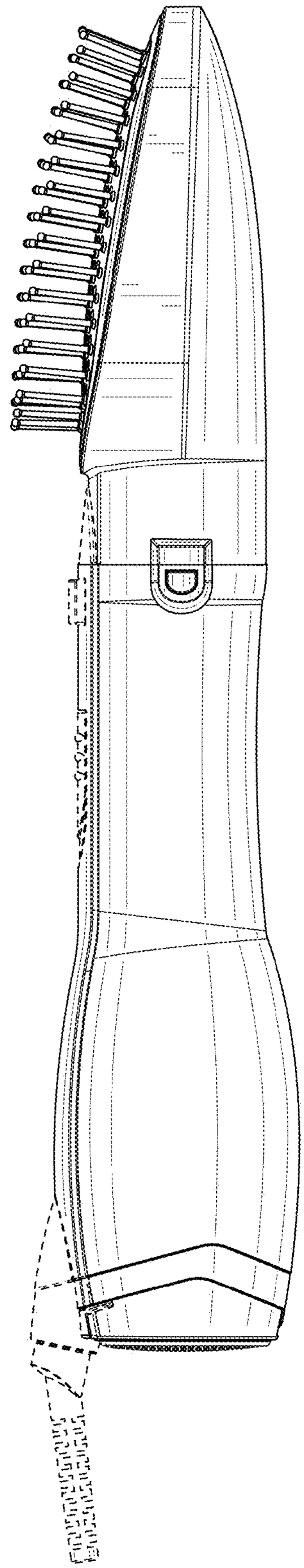

FIG. 3

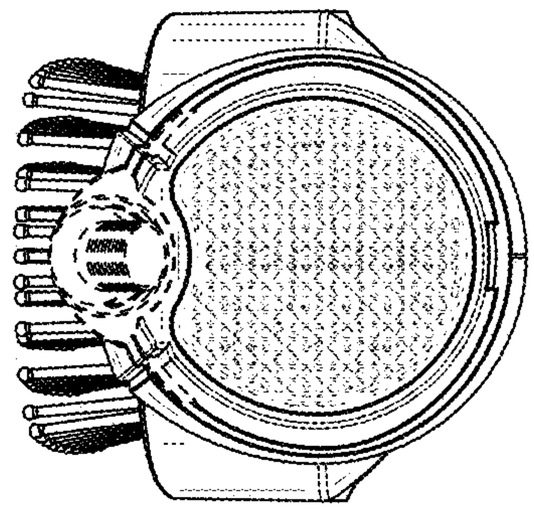

FIG. 5

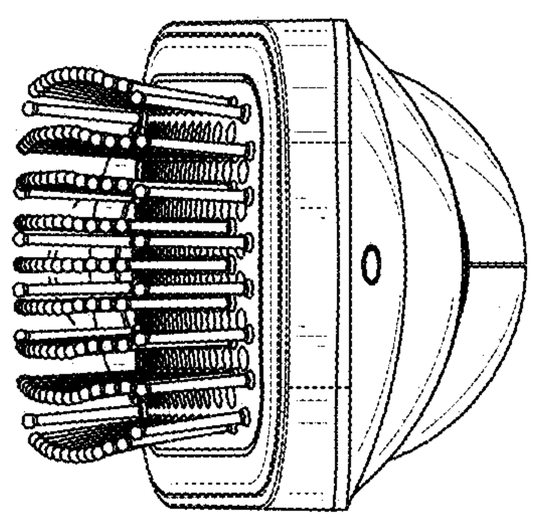

FIG. 4

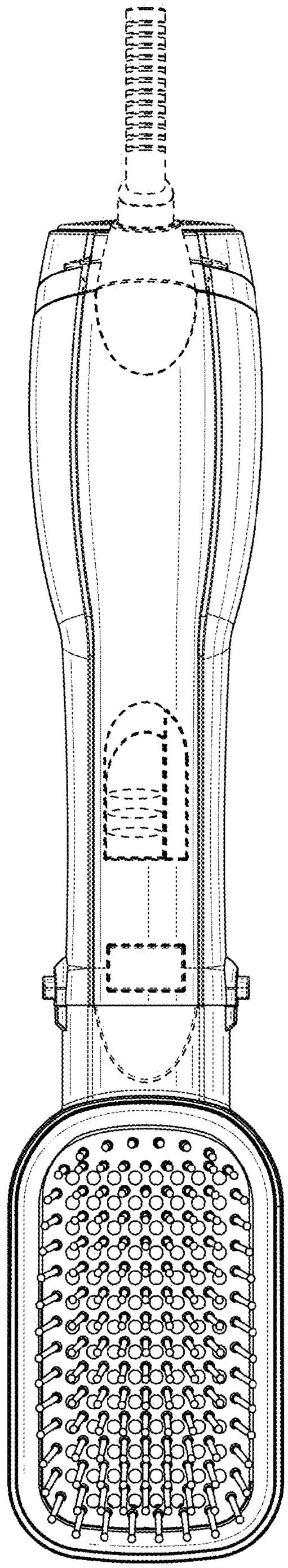

FIG. 6

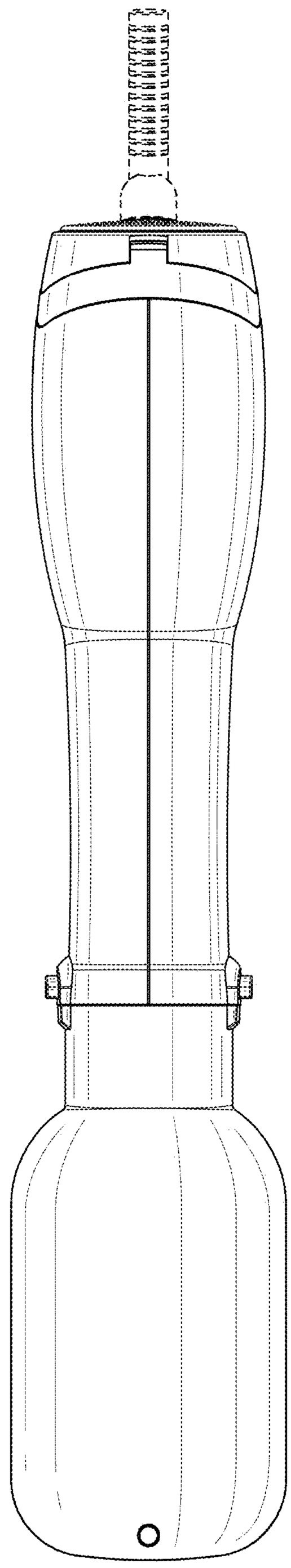

FIG. 7