US00D973030S

(12) United States Design Patent

Lee et al.

(10) Patent No.: US D973,030 S
(45) Date of Patent: ** Dec. 20, 2022

(54) **SEMICONDUCTOR DEVICE**

(71) Applicant: **DONG WOON ANATECH CO., LTD**, Seoul (KR)

(72) Inventors: **Yu-Hwang Lee**, Seoul (KR); **Jung-Hyun Eum**, Seoul (KR); **Ho-Cheol Jang**, Seoul (KR)

(73) Assignee: **DONG WOON ANATECH CO., LTD**, Seoul (KR)

(**) Term: **15 Years**

(21) Appl. No.: **29/772,126**

(22) Filed: **Feb. 26, 2021**

(30) **Foreign Application Priority Data**

Feb. 23, 2021 (KR) 30-2021-0008923

(51) **LOC (13) Cl.** **13-03**

(52) **U.S. Cl.**
USPC **D13/182**

(58) **Field of Classification Search**
USPC D13/101, 110, 112, 118, 120, 123, 133, D13/146, 147, 159, 154, 156, 174, 182, D13/184, 199; D14/356, 433, 435, 438
CPC H01R 24/00; H01R 12/00; H01R 12/70; H01R 13/62
See application file for complete search history.

(56) **References Cited**

U.S. PATENT DOCUMENTS

D523,403	S	*	6/2006	Mizukoshi	D13/182
D648,290	S	*	11/2011	Mori	D13/182
D704,670	S	*	5/2014	Chen	D13/182
D704,671	S	*	5/2014	Chen	D13/182
D710,317	S	*	8/2014	Chen	D13/182
D710,318	S	*	8/2014	Chen	D13/182
D710,319	S	*	8/2014	Chen	D13/182
D827,591	S	*	9/2018	Ikeda	D13/182
D851,612	S	*	6/2019	Wang	D13/182
10,557,191	B2	*	2/2020	Nishida	H01L 51/56
10,600,744	B2	*	3/2020	Chikamatsu	H01L 21/565
10,605,828	B2	*	3/2020	Kung	G01R 31/2865
10,651,050	B2	*	5/2020	Nakano	H01L 21/6835
10,672,878	B2	*	6/2020	Ohoka	H01L 29/417
D916,039	S	*	4/2021	Yamanaka	D13/182

(Continued)

FOREIGN PATENT DOCUMENTS

GB	8207767000-1000	*	4/2020
JP	D1684023	*	4/2021

(Continued)

OTHER PUBLICATIONS

J-Quad, Announced on Apr. 12, 2018 [online], retrieved on Sep. 9, 2022, retrieved from online, https://www.amazon.com/dp/B07C55B8LB/ref=emc_b_5_t (Year: 2018).*

(Continued)

Primary Examiner — Messina L Smith
Assistant Examiner — Noah Perez
(74) *Attorney, Agent, or Firm* — Paratus Law Group, PLLC

(57) **CLAIM**

The ornamental design for a semiconductor device, as shown and described.

DESCRIPTION

FIG. **1** is a front, top, and right-side perspective view of a semiconductor device showing our new design;
FIG. **2** is a front view thereof;
FIG. **3** is a back view thereof;
FIG. **4** is a left-side view thereof;
FIG. **5** is a right-side view thereof;
FIG. **6** is a top view thereof; and,
FIG. **7** is a bottom view thereof.

1 Claim, 2 Drawing Sheets

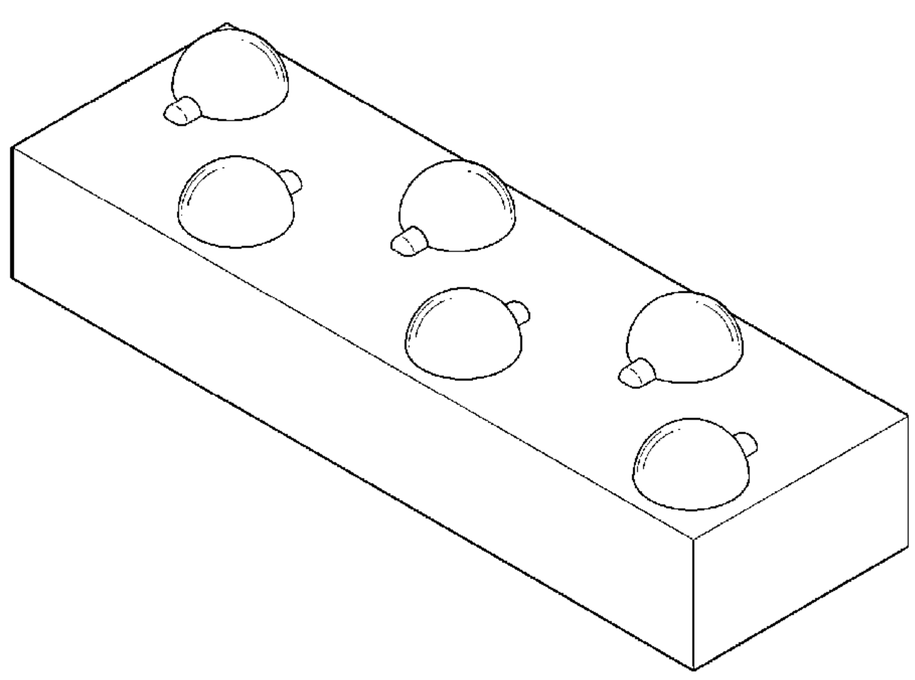

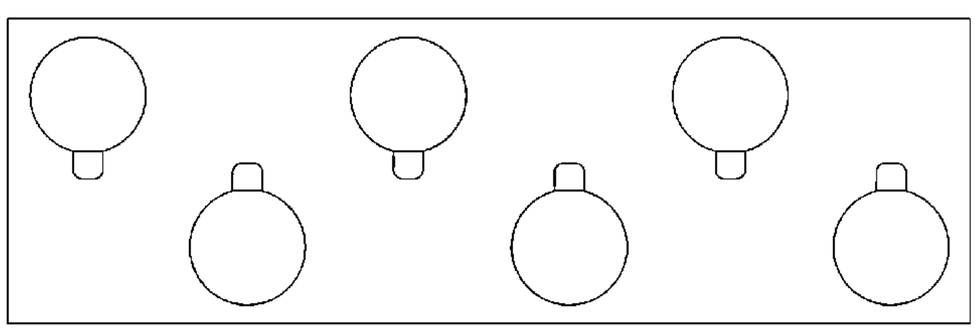

(56) **References Cited**

U.S. PATENT DOCUMENTS

D933,618	S	*	10/2021	Shirata	D13/182
D949,807	S	*	4/2022	Wada	D13/182
2008/0061415	A1	*	3/2008	Morishita	H01L 25/03 257/E21.705

FOREIGN PATENT DOCUMENTS

JP	D1712327	*	4/2022
KR	301145173.0000	*	1/2022
KR	301145174.0000	*	1/2022

OTHER PUBLICATIONS

Dongwoon, Announced on May 23, 2020 [online], retrieved on Sep. 9, 2022, retrieved from online, https://web.archive.org/web/20200523183258/ https://www.immersion.com/use_cases/dongwoon-haptic-ic/ (Year: 2020).*

Audio Xpress, Announced on May 28, 2020 [online], retrieved on Sep. 9, 2022, retrieved from online, https://audioxpress.com/news/cirrus-logic-launches-advanced-haptic-and-sensing-ic-solutions-for-richer-immersive-user-experiences (Year: 2020).*

* cited by examiner

FIG. 1

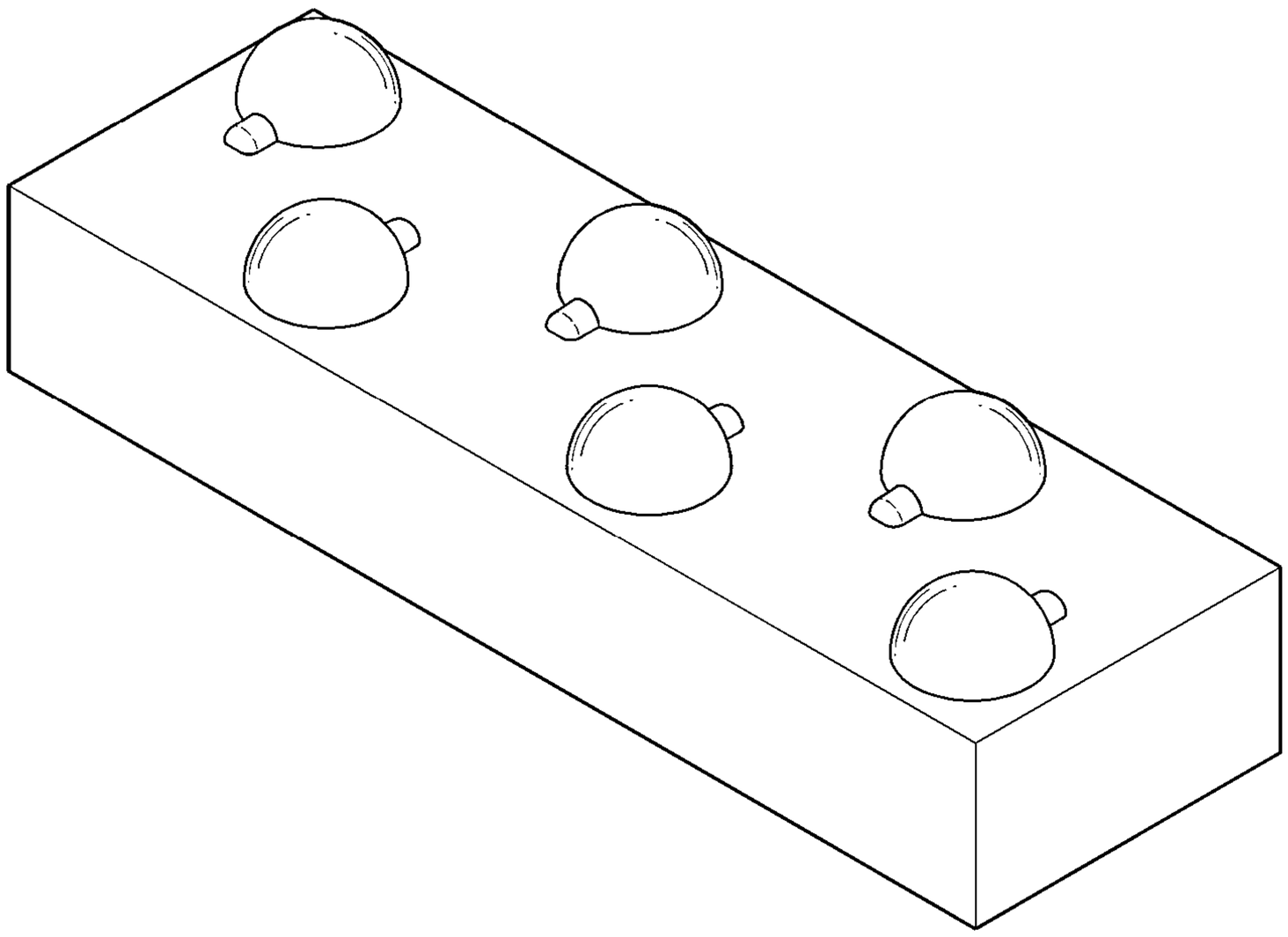

FIG. 2

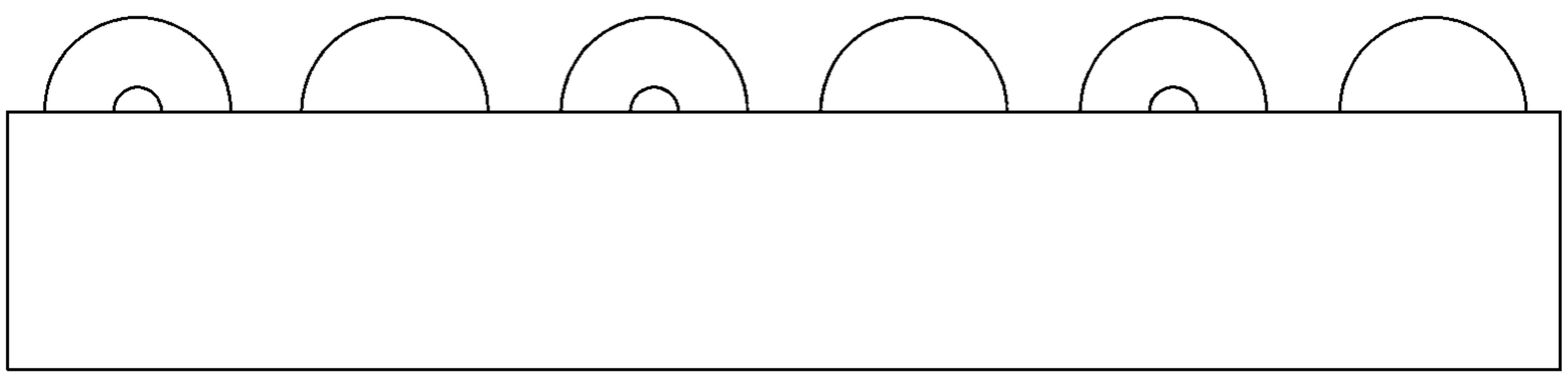

FIG. 3

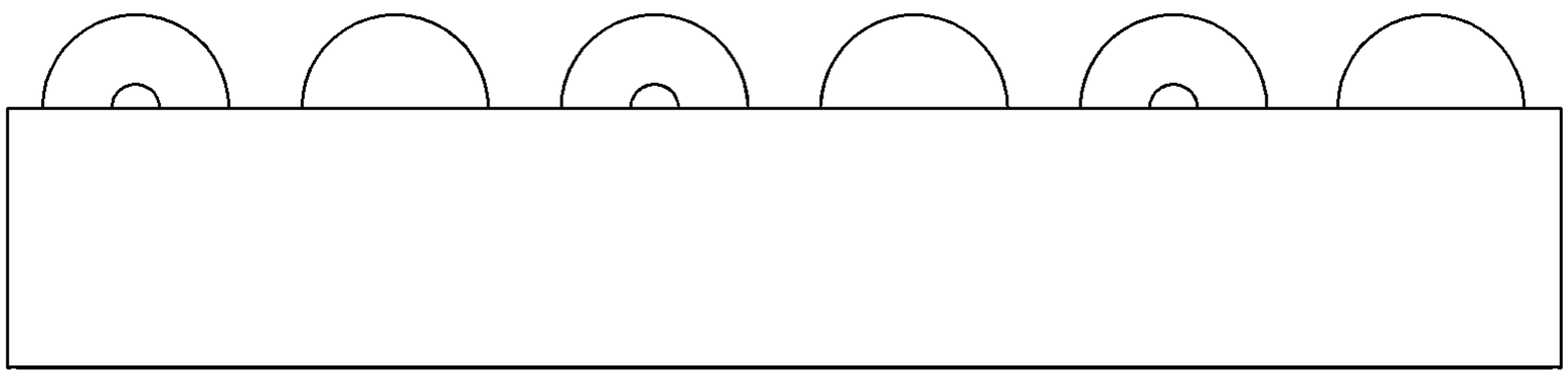

FIG. 4

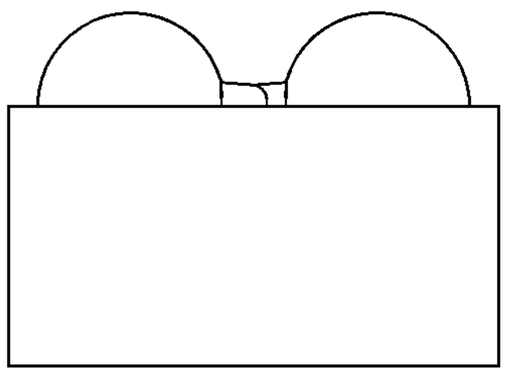

FIG. 5

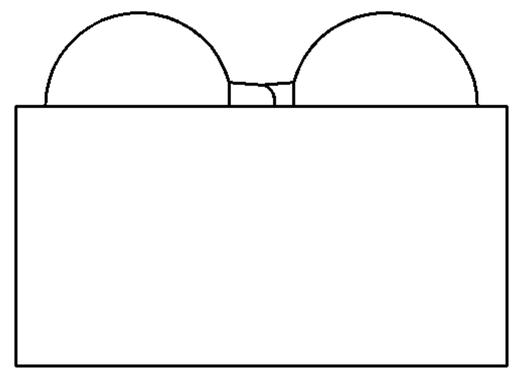

FIG. 6

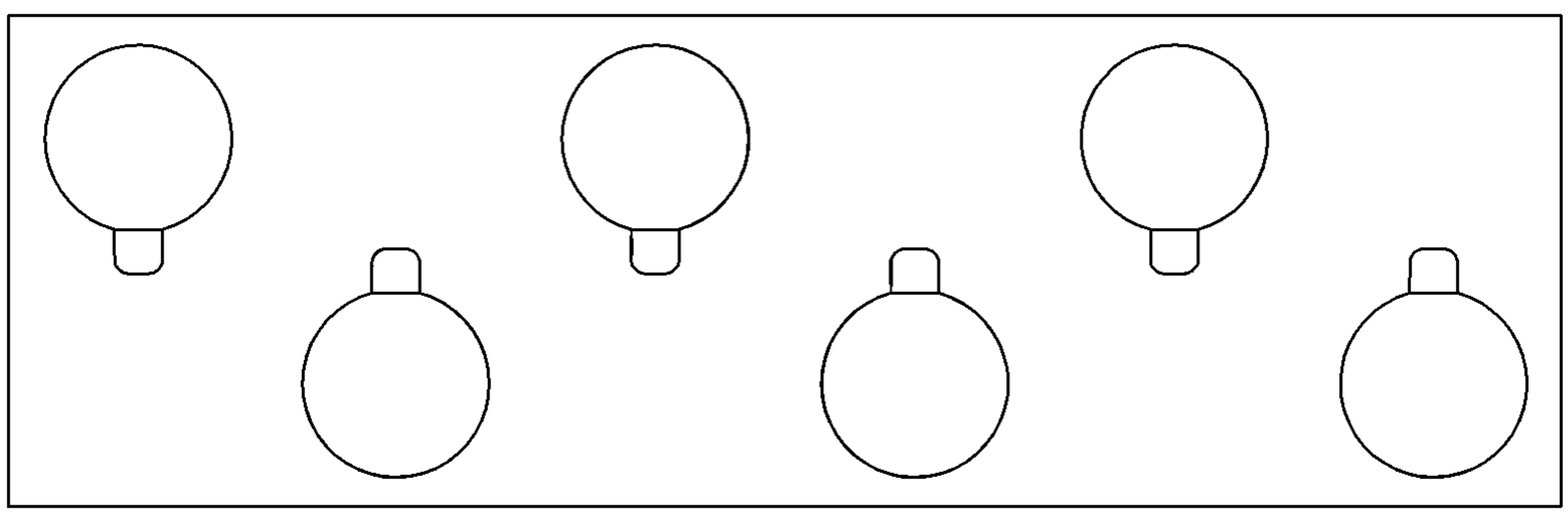
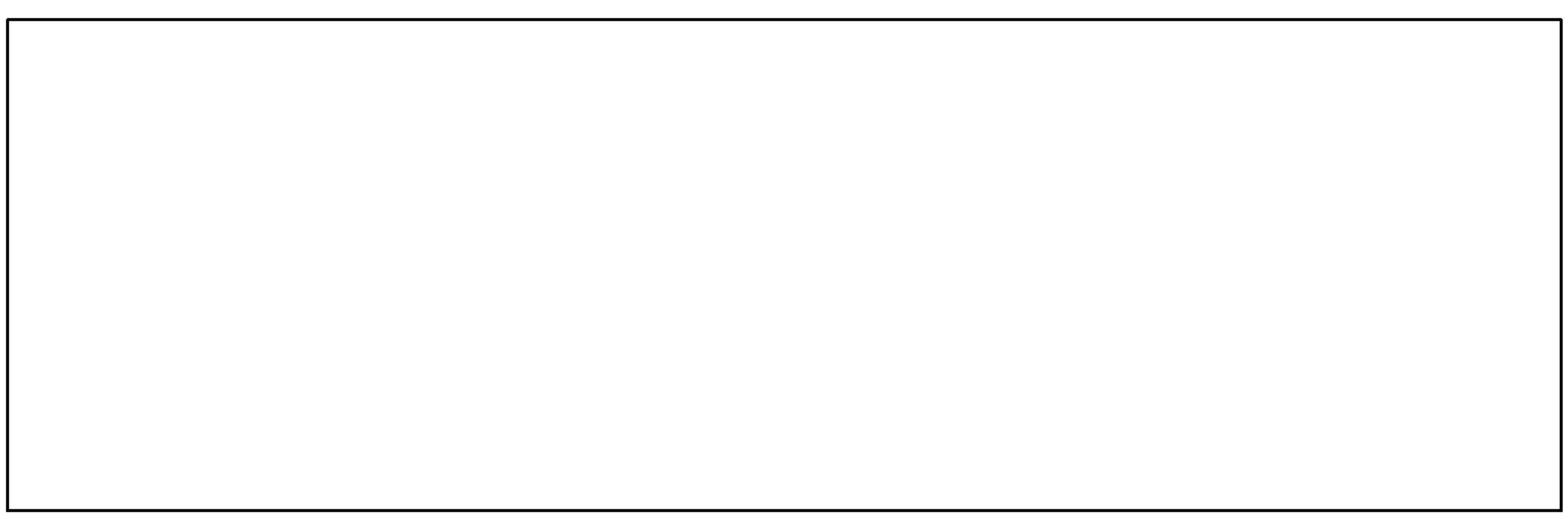
FIG. 7