US00D972394S

(12) United States Design Patent

Sachs

(10) Patent No.: US D972,394 S
(45) Date of Patent: ** Dec. 13, 2022

(54) **PRONGS FOR A CLIP**

(71) Applicant: **Allied Bolt, Inc.**, Lake Success, NY (US)

(72) Inventor: **Jack I. Sachs**, Cote Saint Luc (CA)

(73) Assignee: **ALLIED BOLT, INC.**, Lake Success, NY (US)

(**) Term: **15 Years**

(21) Appl. No.: **29/751,137**

(22) Filed: **Sep. 18, 2020**

(51) **LOC (13) Cl.** **09-06**

(52) **U.S. Cl.**
USPC **D8/356**

(58) **Field of Classification Search**
USPC D8/356, 394, 395
(Continued)

(56) **References Cited**

U.S. PATENT DOCUMENTS

1,578,634 A 3/1926 Borgmann
1,968,596 A 7/1934 Benander
(Continued)

FOREIGN PATENT DOCUMENTS

CN 306800820 * 9/2021
EM 008408850-0001 * 1/2021
(Continued)

OTHER PUBLICATIONS

U.S. Appl. No. 29/144,907 (U.S. Pat. No. D486,728), filed Jul. 12, 2001 (Feb. 17, 2004).
(Continued)

Primary Examiner — Sheryl Lane
Assistant Examiner — Ieisha N Price
(74) *Attorney, Agent, or Firm* — Baker Botts L.L.P.

(57) **CLAIM**

The ornamental design for prongs for a clip, as shown and described.

DESCRIPTION

FIG. **1** is a perspective view of the prongs for a clip.
FIG. **2** is a front view of the prongs for a clip of FIG. **1**.
FIG. **3** is a back view of the prongs for a clip of FIG. **1**.
FIG. **4** is a left side view of the prongs for a clip of FIG. **1**.
FIG. **5** is a right side view of the prongs for a clip of FIG. **1**.
FIG. **6** is a top view of the prongs for a clip of FIG. **1**.
FIG. **7** is a bottom view of the prongs for a clip of FIG. **1**.
FIG. **8** is a perspective view of the prongs for a clip of FIG. **1** showing a cable housed within the prongs.
FIG. **9** is a front view of the prongs for a clip of FIG. **8**.
FIG. **10** is a left side view of the prongs for a clip of FIG. **8**.
FIG. **11** is a perspective view of the prongs for a clip of FIG. **1** shown in an alternate environment.
FIG. **12** is a front view of the prongs for a clip of FIG. **11**.
FIG. **13** is a perspective view of the prongs for a clip of FIG. **11** showing a cable housed within the prongs.
FIG. **14** is a front view of the prongs for a clip of FIG. **13**.
FIG. **15** is a left side view of the prongs for a clip of FIG. **13**; and,
FIG. **16** is a left side view of the prongs for a clip of FIG. **13** showing a small gauge cable housed within the prongs.
The broken lines of the figures show environmental structure of the prongs for a clip and form no part of the claimed design.

1 Claim, 9 Drawing Sheets

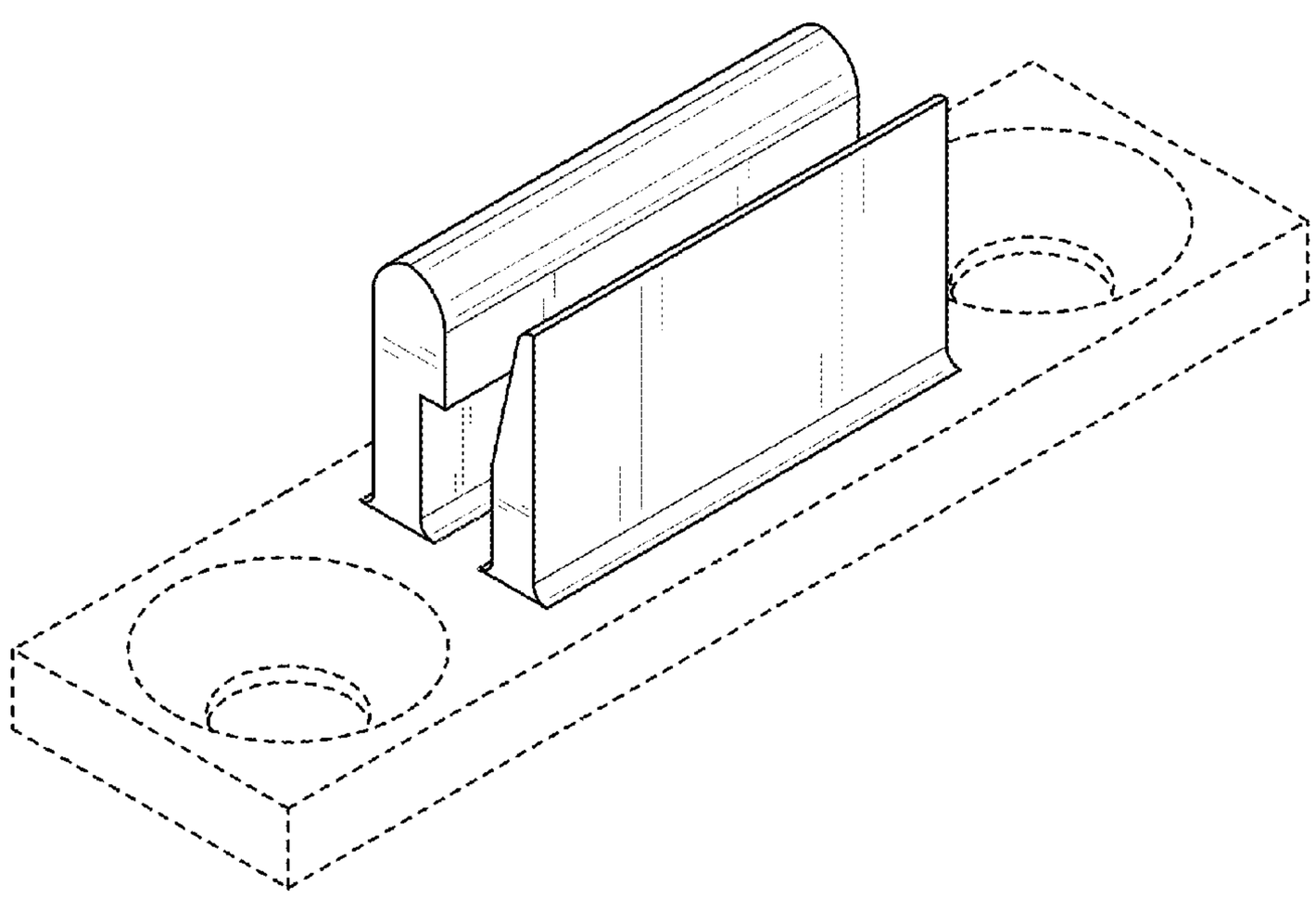

(58) **Field of Classification Search**
CPC ... F16L 3/00; F16L 3/137; H02G 3/32; H01R 4/646; H01R 4/48; H01R 13/65917
See application file for complete search history.

(56) **References Cited**

U.S. PATENT DOCUMENTS

2,545,347	A		3/1951	Embree	
2,569,021	A	*	9/1951	Rozanski	A47F 5/0884 211/124
3,100,922	A	*	8/1963	Burniston	F16L 3/12 D8/395
3,378,806	A		4/1968	Wilkerson et al.	
3,894,706	A	*	7/1975	Mizusawa	F16L 3/237 248/68.1
D239,911	S		5/1976	Schmidt	
D243,151	S	*	1/1977	Bouche	D8/356
4,042,198	A		8/1977	Takeuchi	
D277,934	S	*	3/1985	Beckrot	D8/382
D280,973	S	*	10/1985	Ferrell	D8/395
4,667,910	A		5/1987	Atterby et al.	
4,805,479	A	*	2/1989	Brightwell	F16C 1/226 D8/395
4,823,752	A		4/1989	Uuskallio	
D302,655	S		8/1989	Sachs	
D311,127	S	*	10/1990	Strodtman	D8/356
5,067,677	A	*	11/1991	Miceli	H02G 3/26 D8/356
D326,999	S	*	6/1992	Johnson	D8/356
D330,850	S	*	11/1992	Roick	D8/367
D331,358	S		12/1992	Sachs	
D342,013	S		12/1993	Sachs	
D354,904	S	*	1/1995	Halsten	D8/356
D365,007	S	*	12/1995	Sheftel	D3/905
5,495,644	A	*	3/1996	Mesher	B42D 15/045 24/3.12
5,521,460	A		5/1996	Zhu	
5,639,049	A	*	6/1997	Jennings	F16L 3/123 248/301
D390,448	S	*	2/1998	Bries	D8/356
D390,453	S	*	2/1998	Hamerski	D8/396
5,743,497	A	*	4/1998	Michael	F16L 3/223 248/68.1
5,759,049	A		6/1998	Gerber	
D398,218	S		9/1998	Coll et al.	
D400,090	S		10/1998	Coll	
D418,744	S	*	1/2000	Anderson	D8/395
D451,785	S	*	12/2001	Chaney	D8/354
D459,302	S	*	6/2002	Malin	D13/133
D459,304	S	*	6/2002	Malin	D13/133
D473,448	S	*	4/2003	Wu	D8/356
D474,679	S	*	5/2003	Malin	D8/394
D481,303	S		10/2003	Fell et al.	
D495,944	S	*	9/2004	Winig	D8/367
D510,019	S	*	9/2005	Davis	D34/10
D537,331	S	*	2/2007	Hill	D8/395
D606,849	S	*	12/2009	Jimenez	D8/395
D619,451	S	*	7/2010	Carlesso	D8/395
D631,740	S	*	2/2011	Wood	D8/396
D644,504	S	*	9/2011	Rieder	D8/395
D652,288	S	*	1/2012	Mercier	D8/396
D657,662	S	*	4/2012	Boucher-Gagne	D8/394
D657,663	S	*	4/2012	Boucher-Gagne	D8/394
D658,049	S	*	4/2012	Boucher-Gagne	D8/394
D659,525	S	*	5/2012	Boucher-Gagne	D8/394
D659,526	S	*	5/2012	Boucher-Gagne	D8/395
D661,570	S	*	6/2012	Fox	D8/356
8,286,923	B2	*	10/2012	Kobayashi	F16L 3/1075 248/68.1
D692,689	S	*	11/2013	Yiannaki	D6/606
D755,043	S	*	5/2016	Bailey	D8/394
D770,887	S	*	11/2016	Sudol	D8/395
D796,946	S	*	9/2017	Pittman	D8/395
D856,784	S	*	8/2019	Zeilinger	D8/354
D878,193	S	*	3/2020	Witherbee	D8/396
D890,601	S	*	7/2020	Gori	D8/394
D890,602	S	*	7/2020	Gori	D8/394
10,797,477	B1	*	10/2020	Peterson	H02G 3/32
10,961,719	B2	*	3/2021	Doupe	E04F 15/105
D921,886	S	*	6/2021	Froum	D8/356
D922,186	S	*	6/2021	Schneider	D25/123
11,274,772	B2	*	3/2022	Leeson	F16L 3/1236
D947,662	S	*	4/2022	Thomas	D8/394
2005/0233642	A1	*	10/2005	Gerlich	H01R 13/65917 439/607.41
2007/0049073	A1	*	3/2007	Hill	H01R 4/646 439/98
2007/0066125	A1	*	3/2007	Uenver	H01R 13/73 439/459
2008/0203247	A1	*	8/2008	Hill	H02G 3/32 248/74.2
2010/0254123	A1	*	10/2010	Brown	A42B 1/244 248/316.7
2012/0061529	A1	*	3/2012	Hill	H01R 4/48 248/65
2012/0106053	A1	*	5/2012	Sun	H02G 3/32 361/679.02
2014/0061396	A1	*	3/2014	Magno, Jr.	F16L 3/10 248/72
2014/0157868	A1	*	6/2014	Ward	H02G 3/32 24/522
2014/0188078	A1	*	7/2014	Peters	A61M 25/02 604/180
2017/0040715	A1	*	2/2017	Archundia Stefanonni	H01R 4/38
2018/0045335	A1	*	2/2018	Martin	F16L 3/04
2018/0093806	A1	*	4/2018	Fossey	F16L 3/137
2019/0014676	A1	*	1/2019	Nakamura	H05K 7/12
2019/0093792	A1	*	3/2019	Leeson	F16L 3/1226

FOREIGN PATENT DOCUMENTS

HK	9801539-0001	*	9/1998
HK	9801540-0001	*	9/1998
JP	D1377502	*	1/2010
KR	300858727.0000	*	6/2016
MX	38038-0001	*	2/2013
RU	00123759	*	2/2021
RU	00127662	*	9/2021
RU	00127663	*	9/2021
RU	00127664	*	9/2021
RU	00127665	*	9/2021

OTHER PUBLICATIONS

U.S. Appl. No. 29/189,701 (U.S. Pat. No. D511,679), filed Sep. 9, 2003 (Nov. 22, 2005).
U.S. Appl. No. 29/751,153, filed Sep. 18, 2020.
U.S. Appl. No. 29/189,701, dated Aug. 1, 2005 Issue Fee Payment.
U.S. Appl. No. 29/189,701, dated May 5, 2005 Notice of Allowance.
U.S. Appl. No. 29/144,907, dated Dec. 5, 2003 Issue Fee Payment.
U.S. Appl. No. 29/144,907, dated Sep. 5, 2003 Notice of Allowance.
U.S. Appl. No. 29/144,907, dated Aug. 21, 2003 Response to Restriction Requirement.
U.S. Appl. No. 29/144,907, dated May 5, 2003 Restriction Requirement.
Telewire Supply Catalog (p. E19) Entitled "Screw & Snaps Clips" (1996).

* cited by examiner

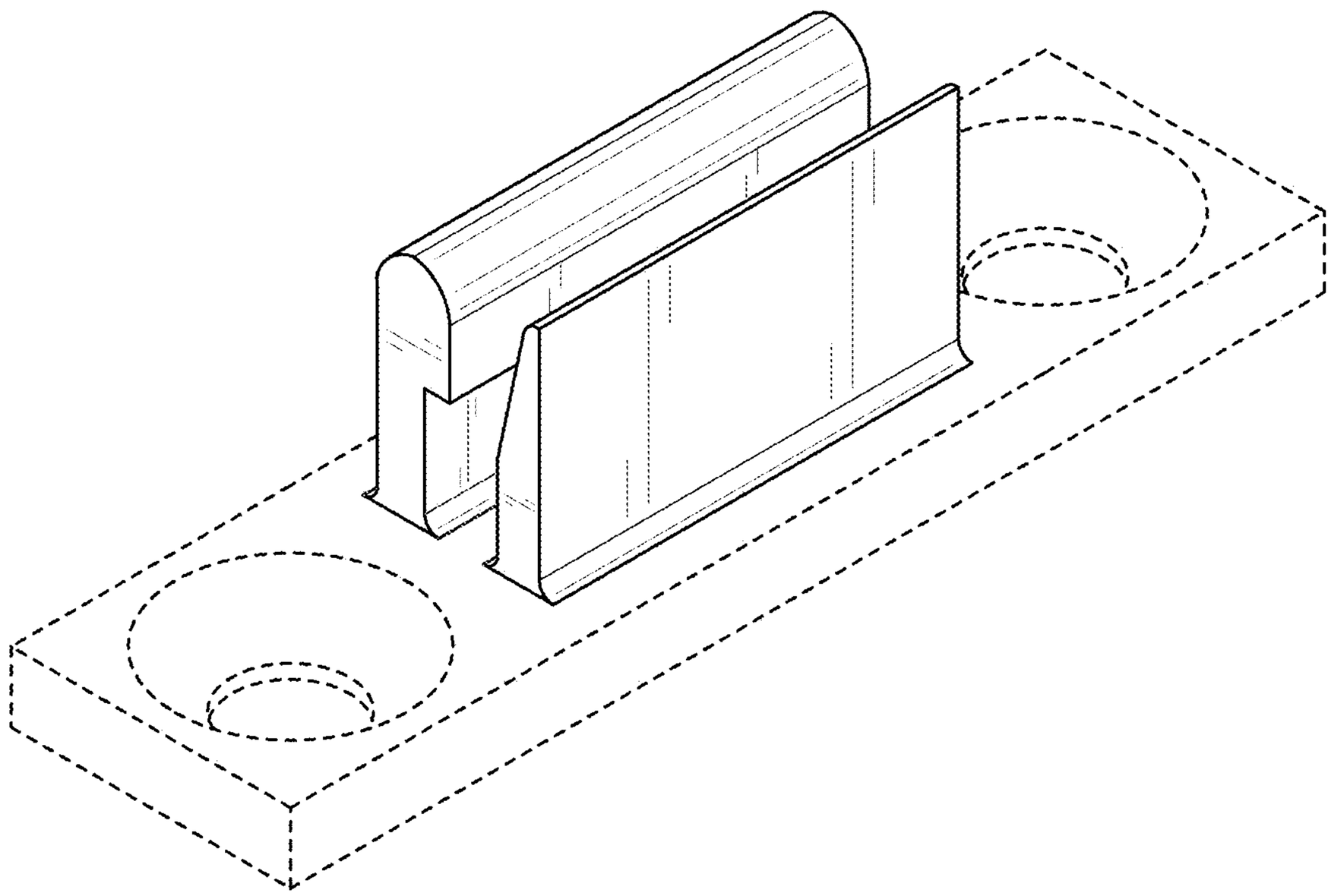

FIG. 1

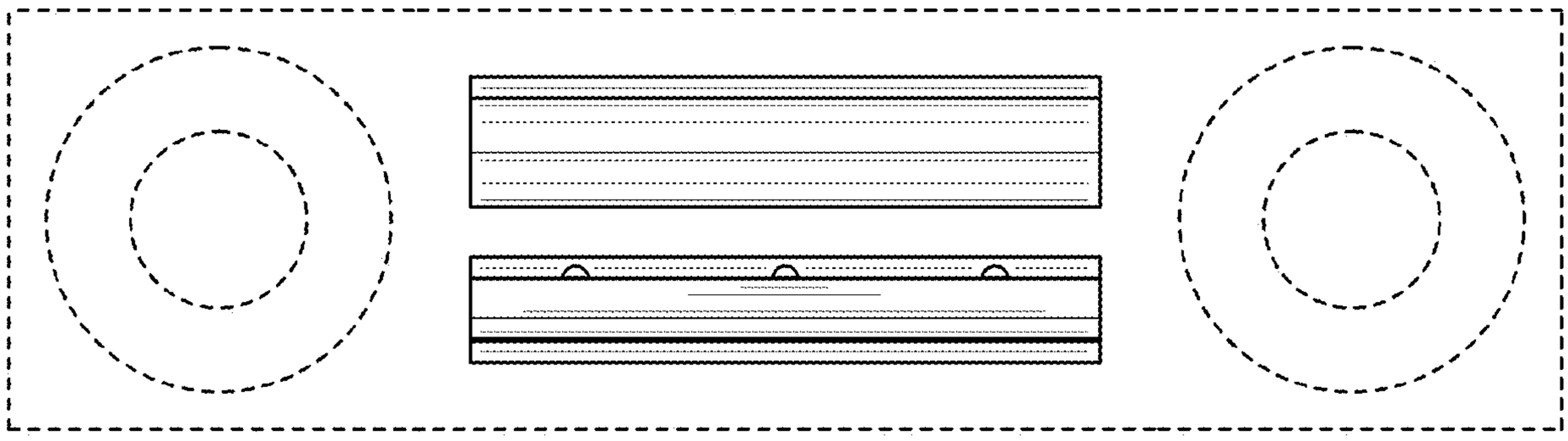

FIG. 2

FIG. 3

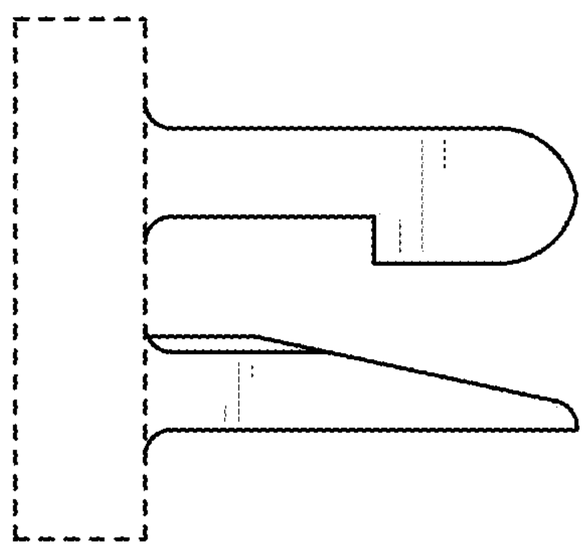

FIG. 4

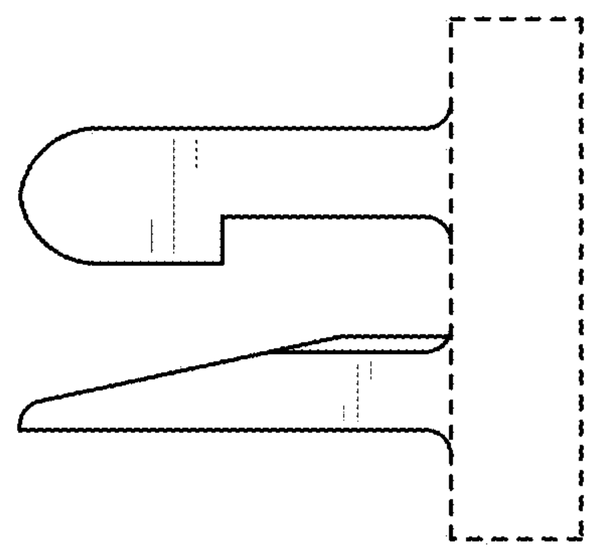

FIG. 5

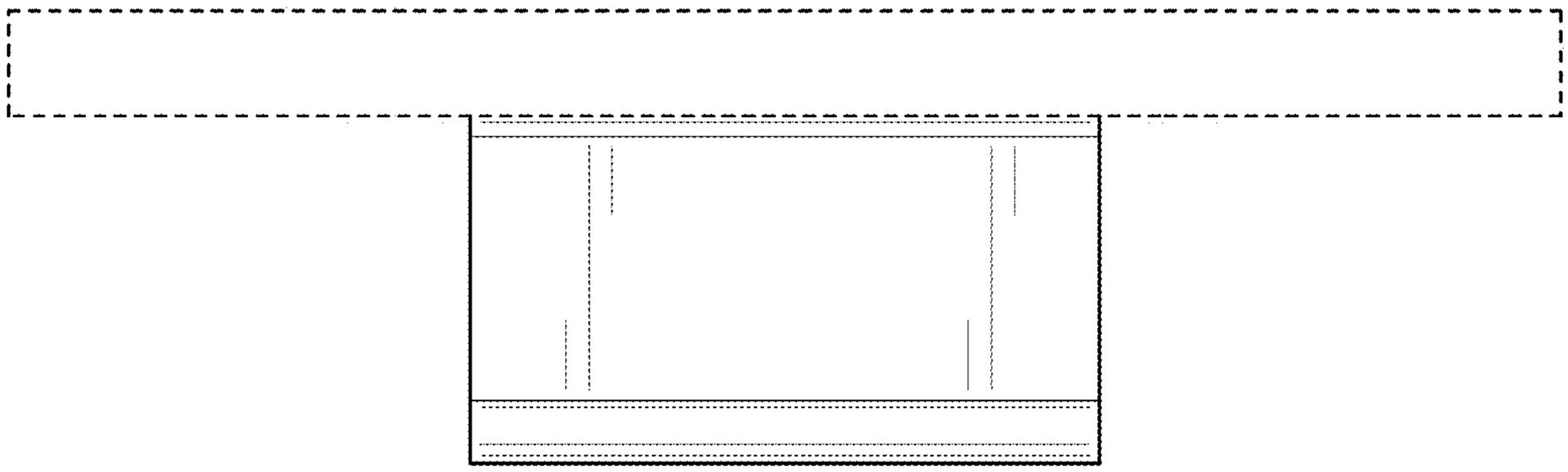

FIG. 6

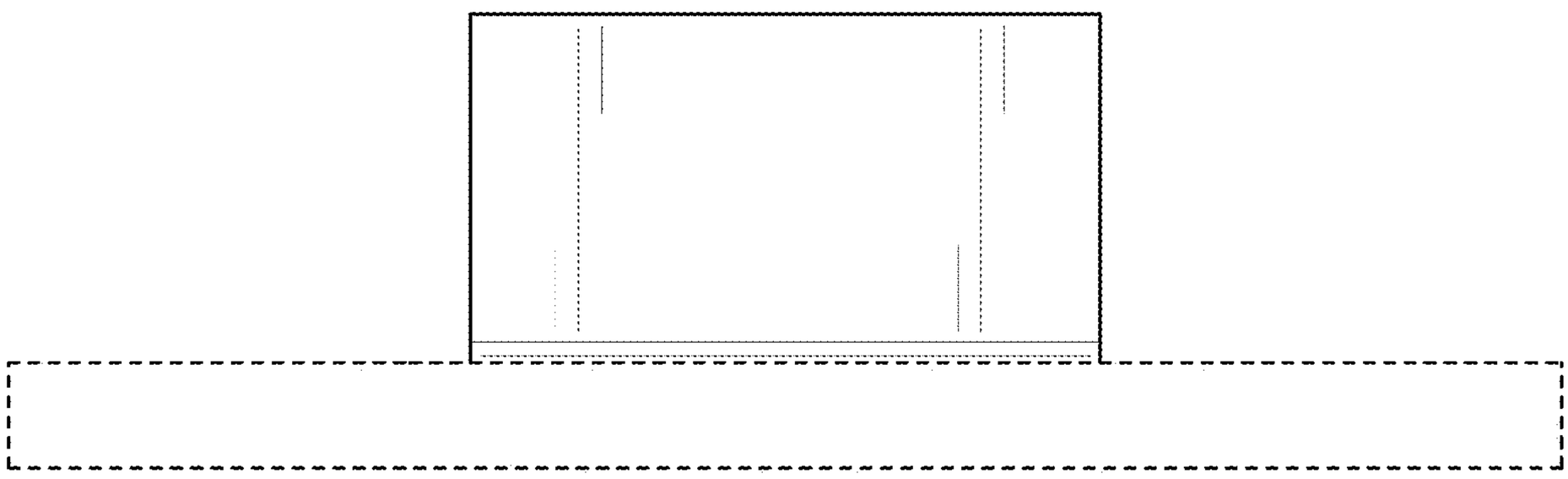

FIG. 7

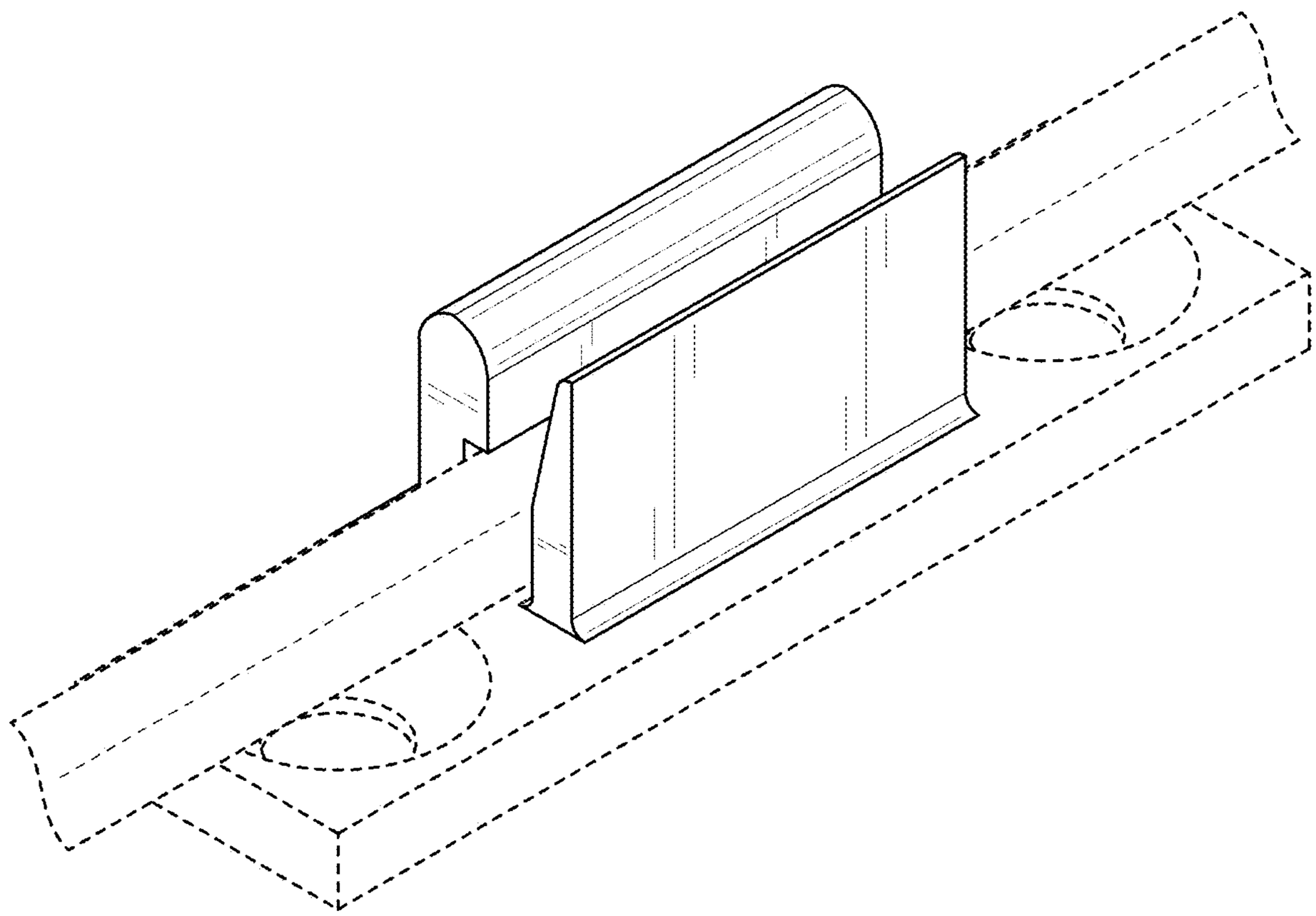

FIG. 8

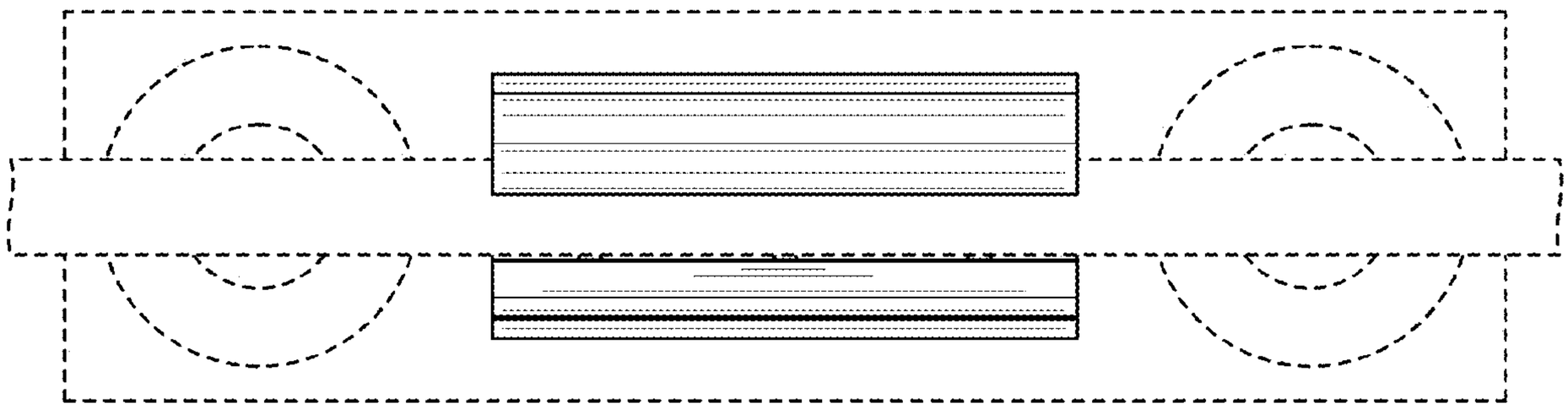

FIG. 9

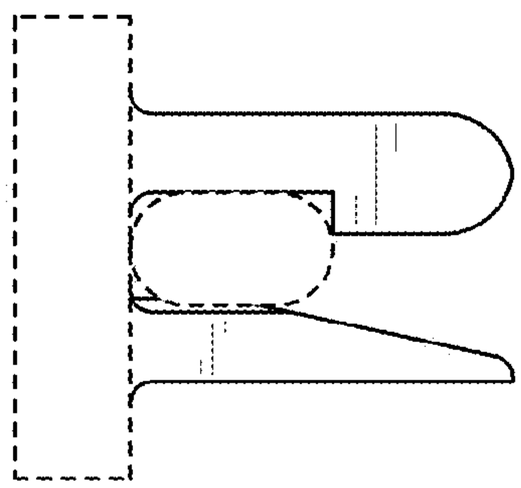

FIG. 10

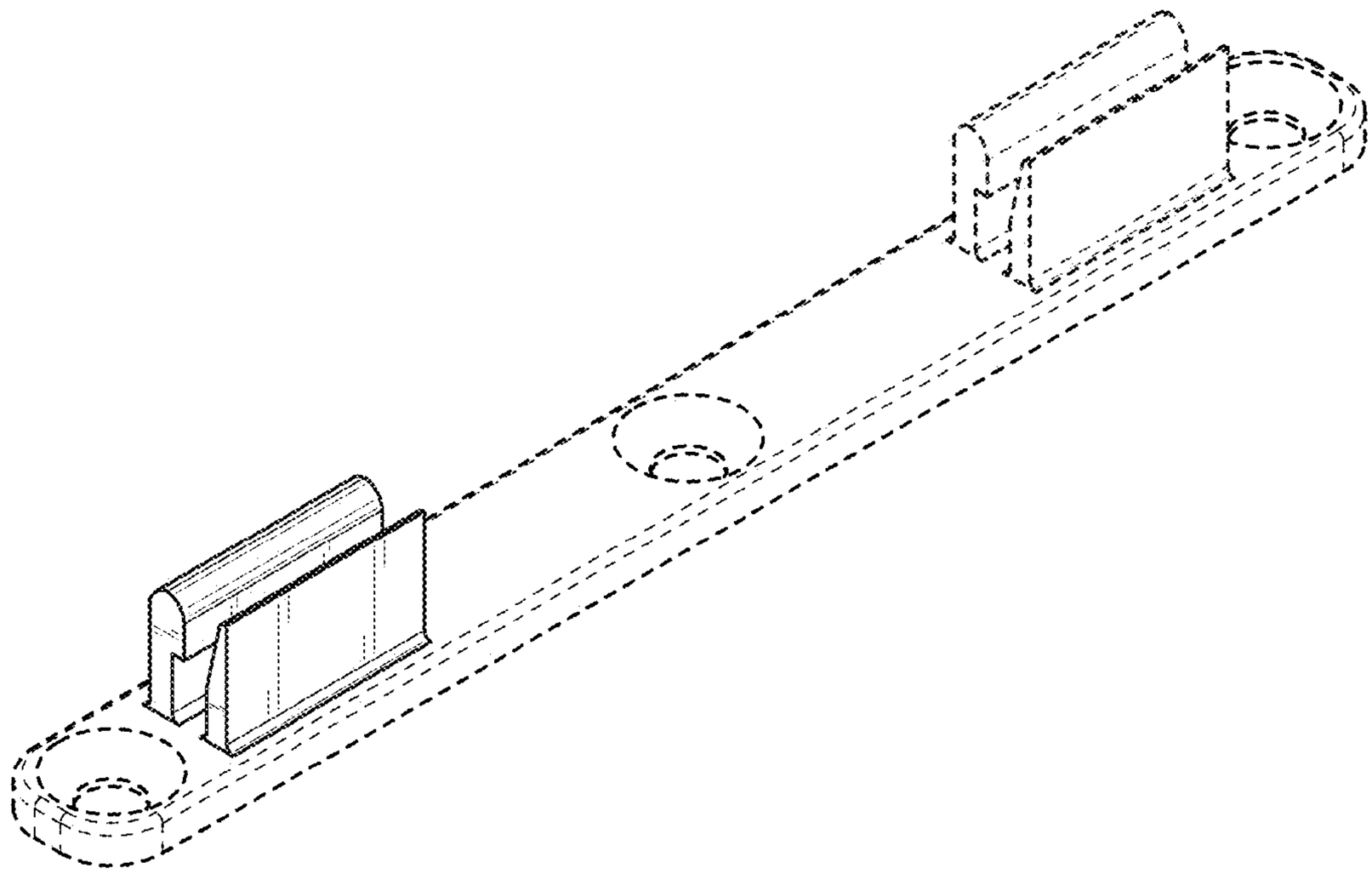

FIG. 11

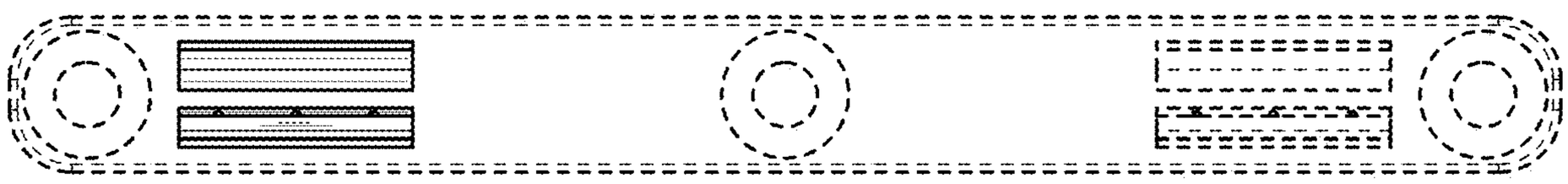

FIG. 12

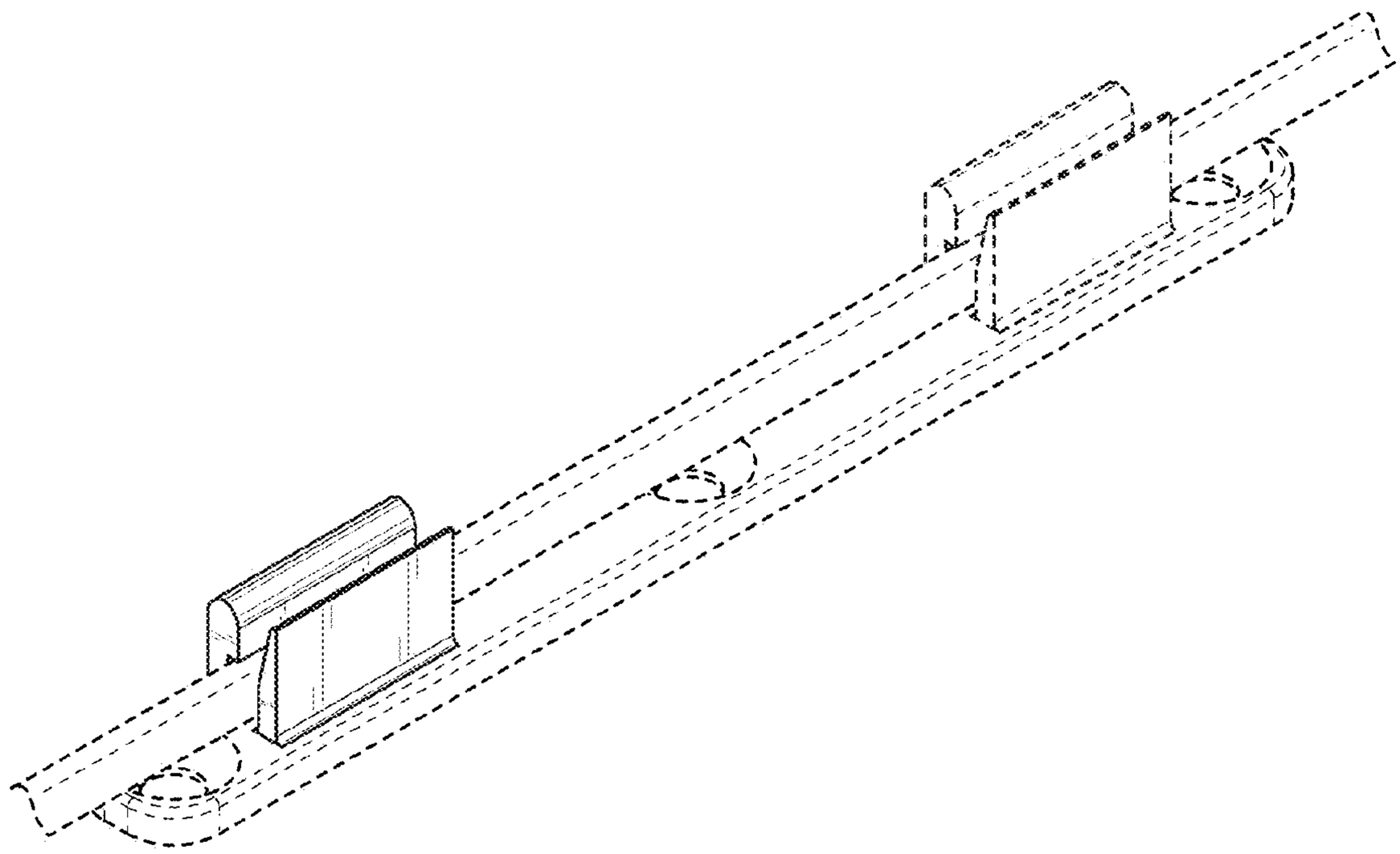

FIG. 13

FIG. 14

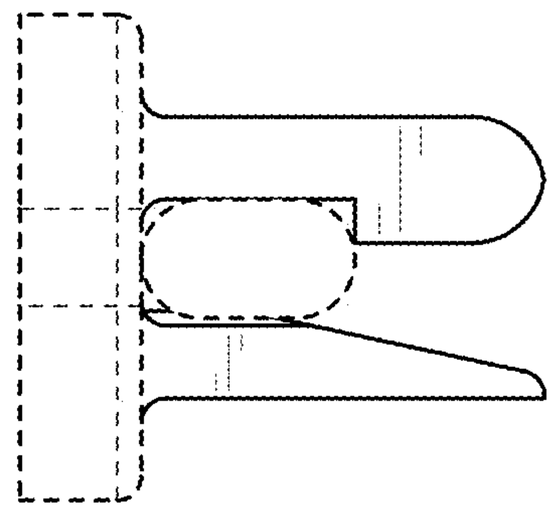

FIG. 15

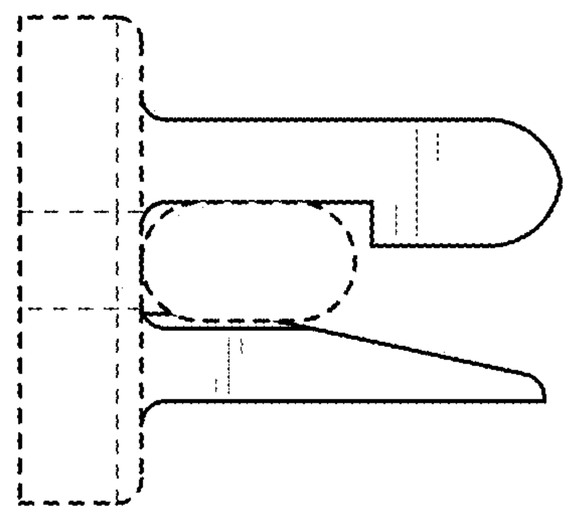

FIG. 16