US00D971143S

(12) United States Design Patent

Wang et al.

(10) Patent No.: US D971,143 S
(45) Date of Patent: ** Nov. 29, 2022

(54) **BATTERY CHARGER**

(71) Applicant: **SHENZHEN XINGYINGDA INDUSTRY CO., LTD.**, Shenzhen (CN)

(72) Inventors: **Jun Wang**, Shenzhen (CN); **Yan Ke**, Shenzhen (CN)

(73) Assignee: **SHENZHEN XINGYINGDA INDUSTRY CO., LTD.**, Shenzhen (CN)

(**) Term: **15 Years**

(21) Appl. No.: **29/847,054**

(22) Filed: **Jul. 21, 2022**

(51) **LOC (13) Cl.** **13-02**

(52) **U.S. Cl.**
USPC **D13/108**

(58) **Field of Classification Search**
USPC D13/107, 108, 110, 118, 119, 184, 199; D14/251, 253, 432, 434
CPC H02J 7/025; H02J 7/005; H02J 7/0026; H02J 7/0042; H02J 7/0044; H02J 7/0045; H02J 7/0013; H02J 7/0003; H02J 50/10; H02J 50/12
See application file for complete search history.

(56) **References Cited**

U.S. PATENT DOCUMENTS

D278,426 S * 4/1985 Lanci D13/107
D350,540 S * 9/1994 Hyvonen D14/149
D601,953 S * 10/2009 Asai D13/107
D607,403 S * 1/2010 Hara D13/107
D687,770 S * 8/2013 Rabalais D13/107
D692,824 S * 11/2013 Fiaschetti D13/108
D718,710 S * 12/2014 Rabalais D13/107
D749,042 S * 2/2016 Gecawicz D13/107
D755,122 S * 5/2016 Gecawicz D13/107
D765,595 S * 9/2016 Shaanan D13/107
D782,974 S * 4/2017 Ju D13/108
D816,028 S * 4/2018 Chen D13/108
D820,782 S * 6/2018 Wang D13/107
D820,783 S * 6/2018 Gelder D13/107
D822,597 S * 7/2018 Wai Hung D13/107
D846,497 S * 4/2019 Clark D13/108
D895,545 S * 9/2020 Singer D13/108
D900,732 S * 11/2020 Sexton D13/107
D926,679 S * 8/2021 Yang D13/108
D931,803 S * 9/2021 Ge D13/107
D946,505 S * 3/2022 Birkholz D13/107
D956,687 S 7/2022 Huang
D957,323 S 7/2022 Zhang et al.
D957,337 S * 7/2022 Chen D13/119
D964,273 S * 9/2022 Uchida D13/108
D964,929 S * 9/2022 Maeda D13/108
D967,019 S * 10/2022 Parcon D13/108

* cited by examiner

Primary Examiner — Christy Nemeth
(74) *Attorney, Agent, or Firm* — ScienBiziP, P.C.

(57) **CLAIM**

The ornamental design for a battery charger, as shown and described.

DESCRIPTION

FIG. **1** is a front, right and top perspective view of a battery charger, showing our design.
FIG. **2** is a rear, left and bottom perspective view thereof.
FIG. **3** is a front elevation view thereof.
FIG. **4** is a rear elevation view thereof.
FIG. **5** is a left side elevation view thereof.
FIG. **6** is a right side elevation view thereof.
FIG. **7** is a top plan view thereof; and,
FIG. **8** is a bottom plan view thereof.
The broken lines shown in the drawings are included for the purpose of illustrating portions of the battery charger that form no part of the claimed design.

1 Claim, 8 Drawing Sheets

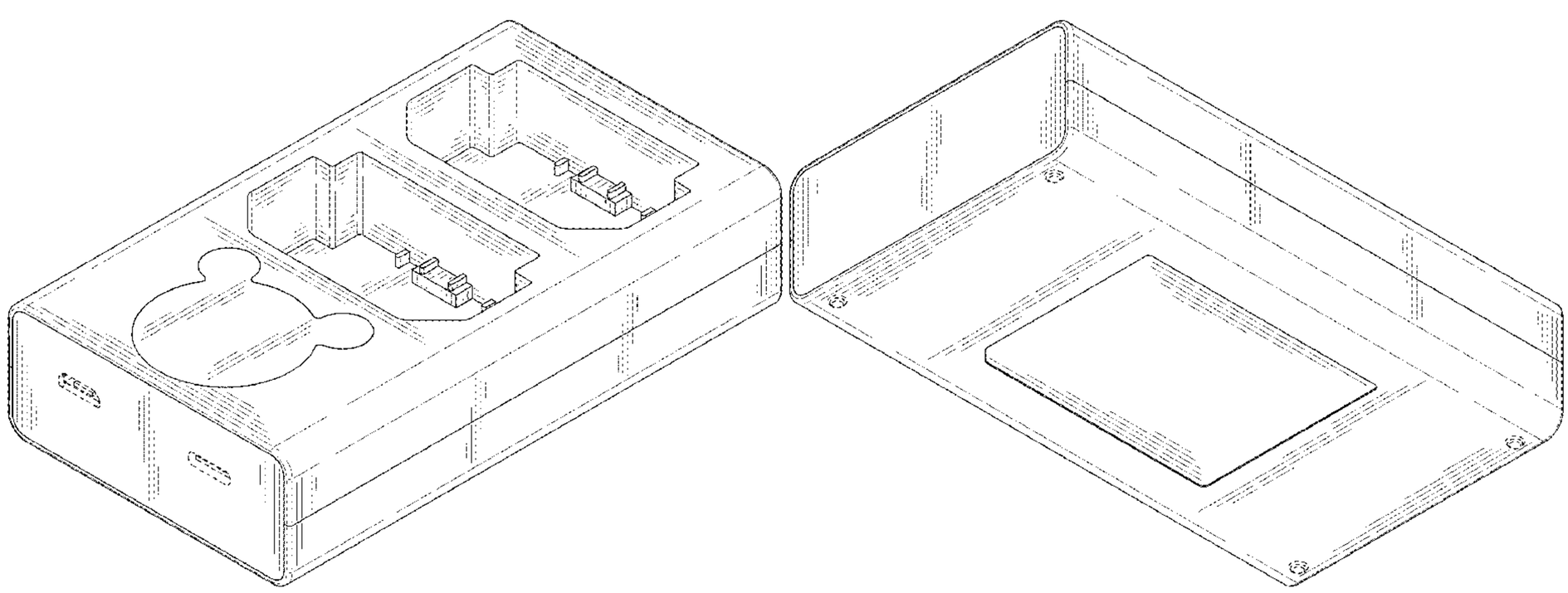

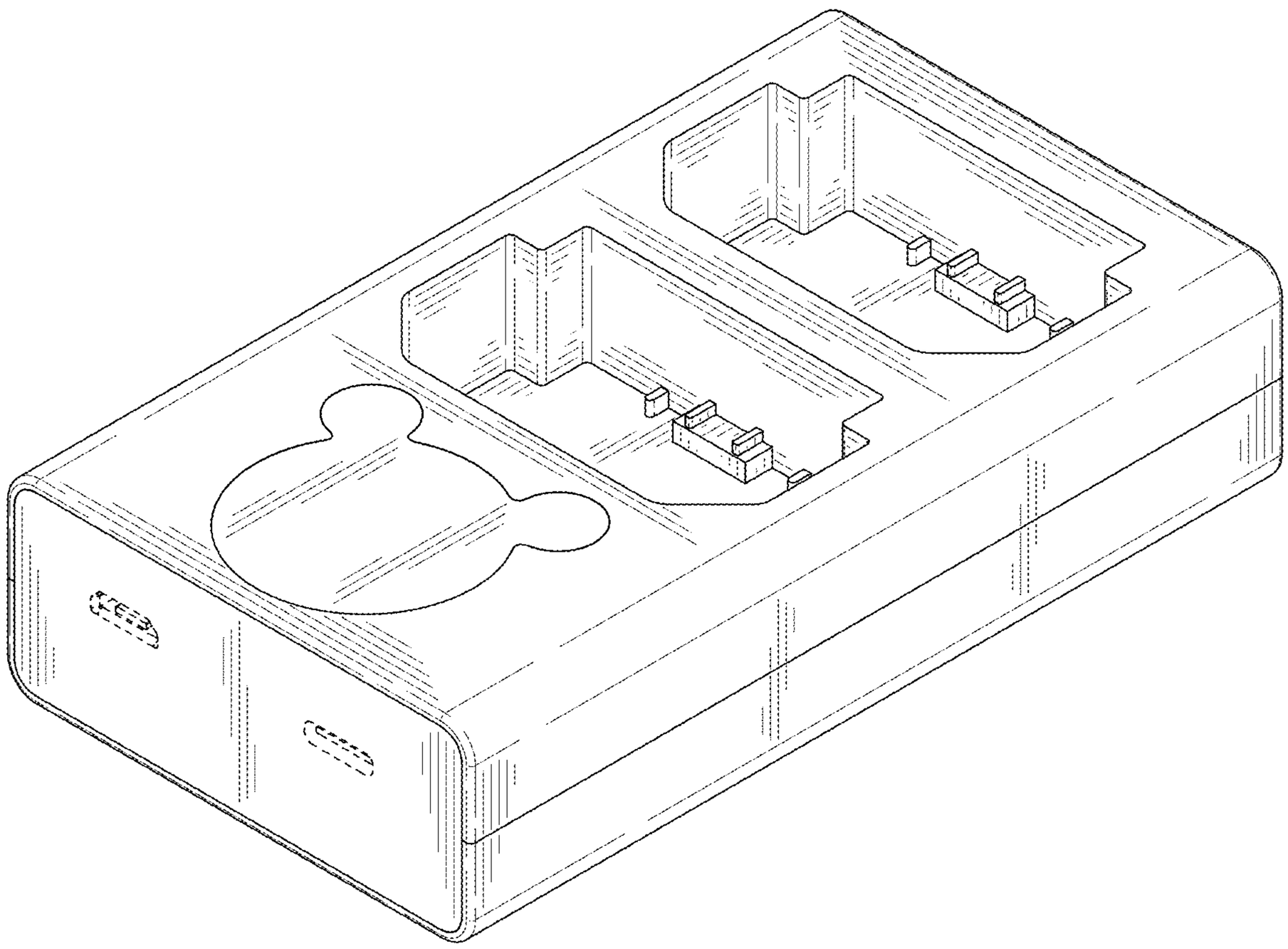

FIG. 1

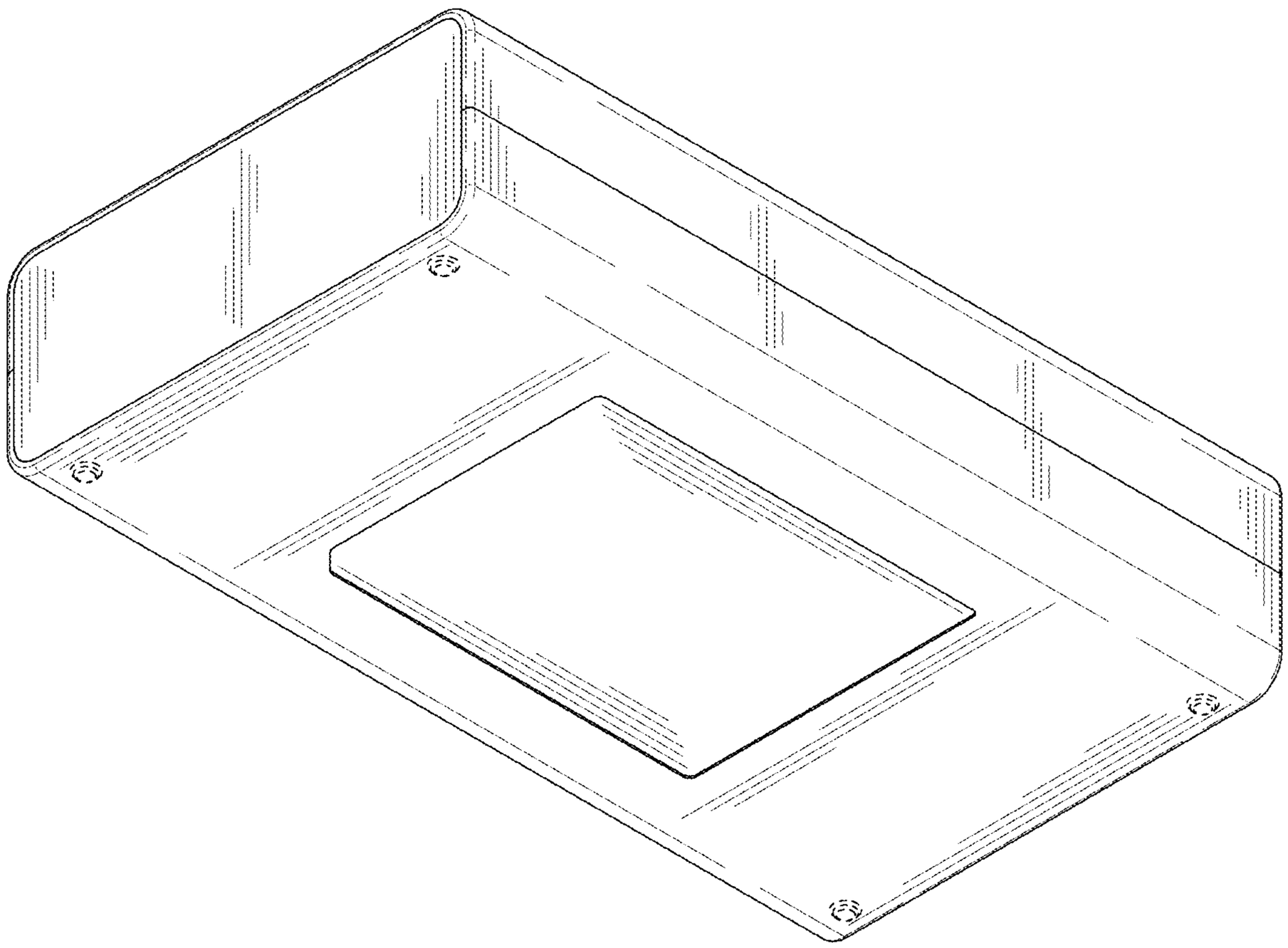

FIG. 2

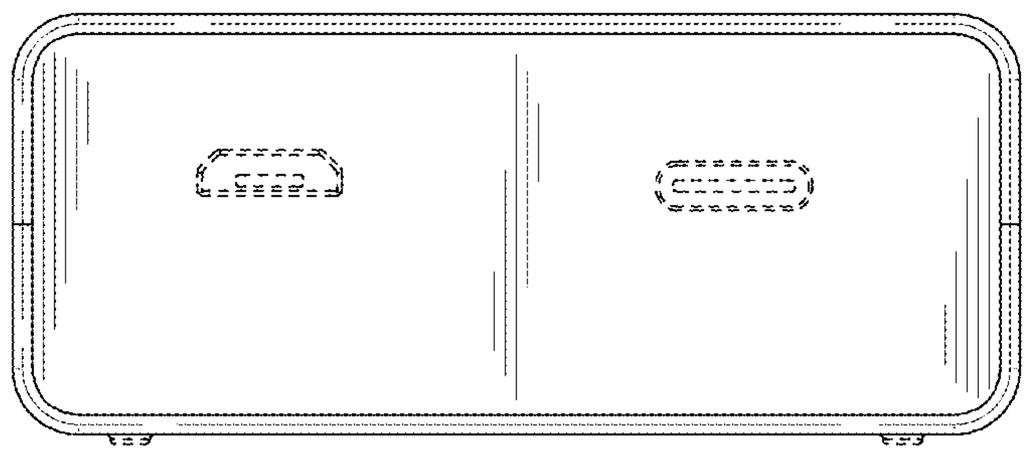

FIG. 3

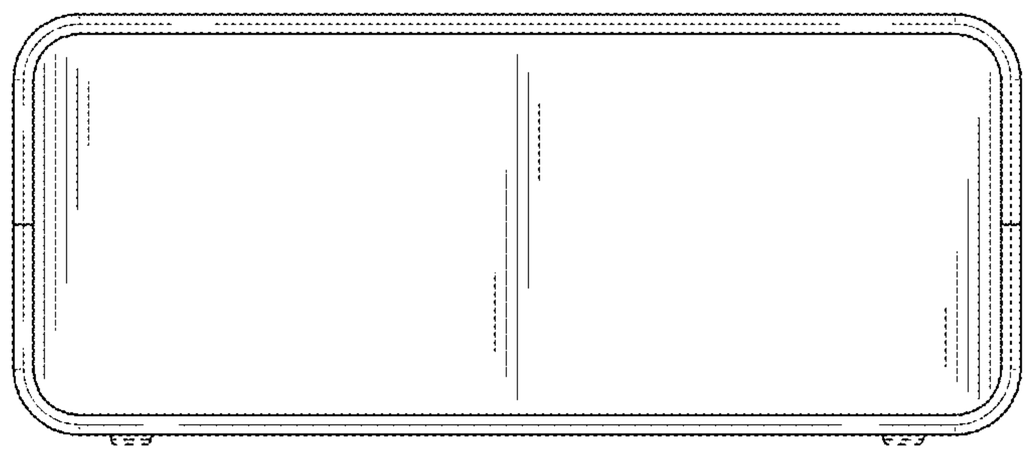

FIG. 4

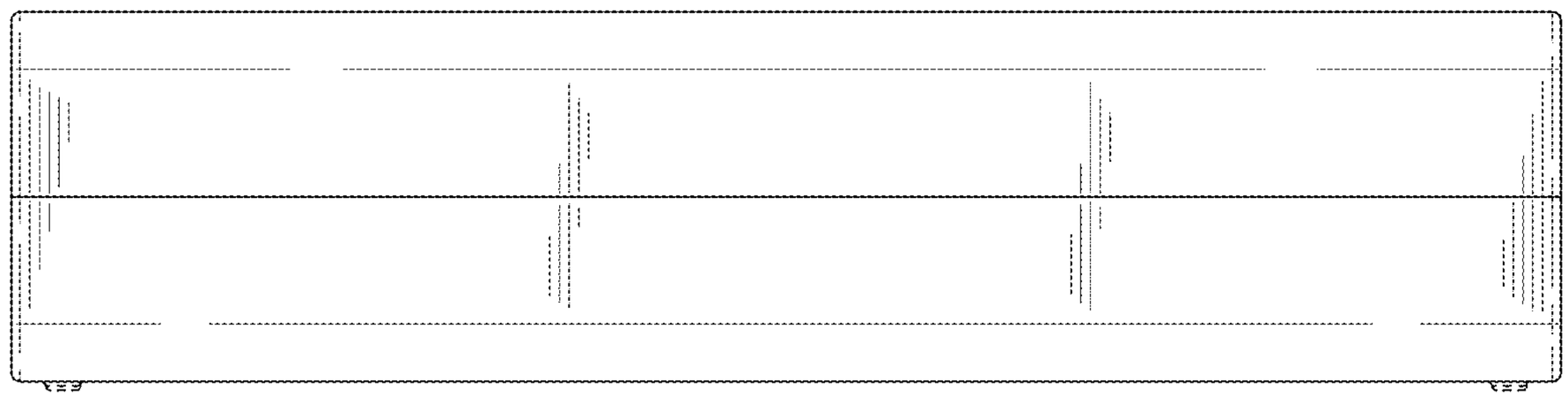

FIG. 5

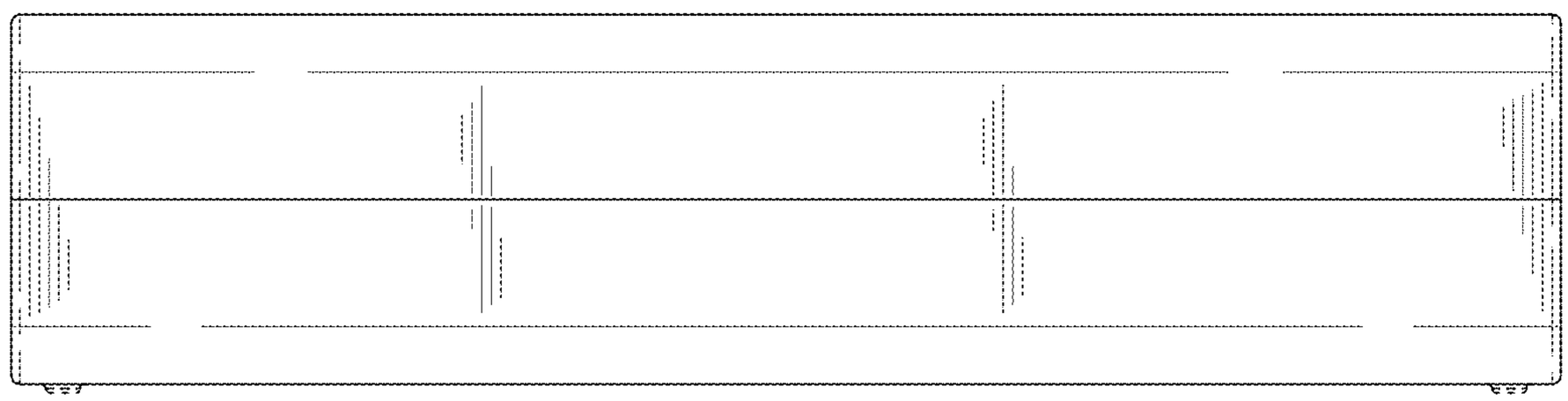

FIG. 6

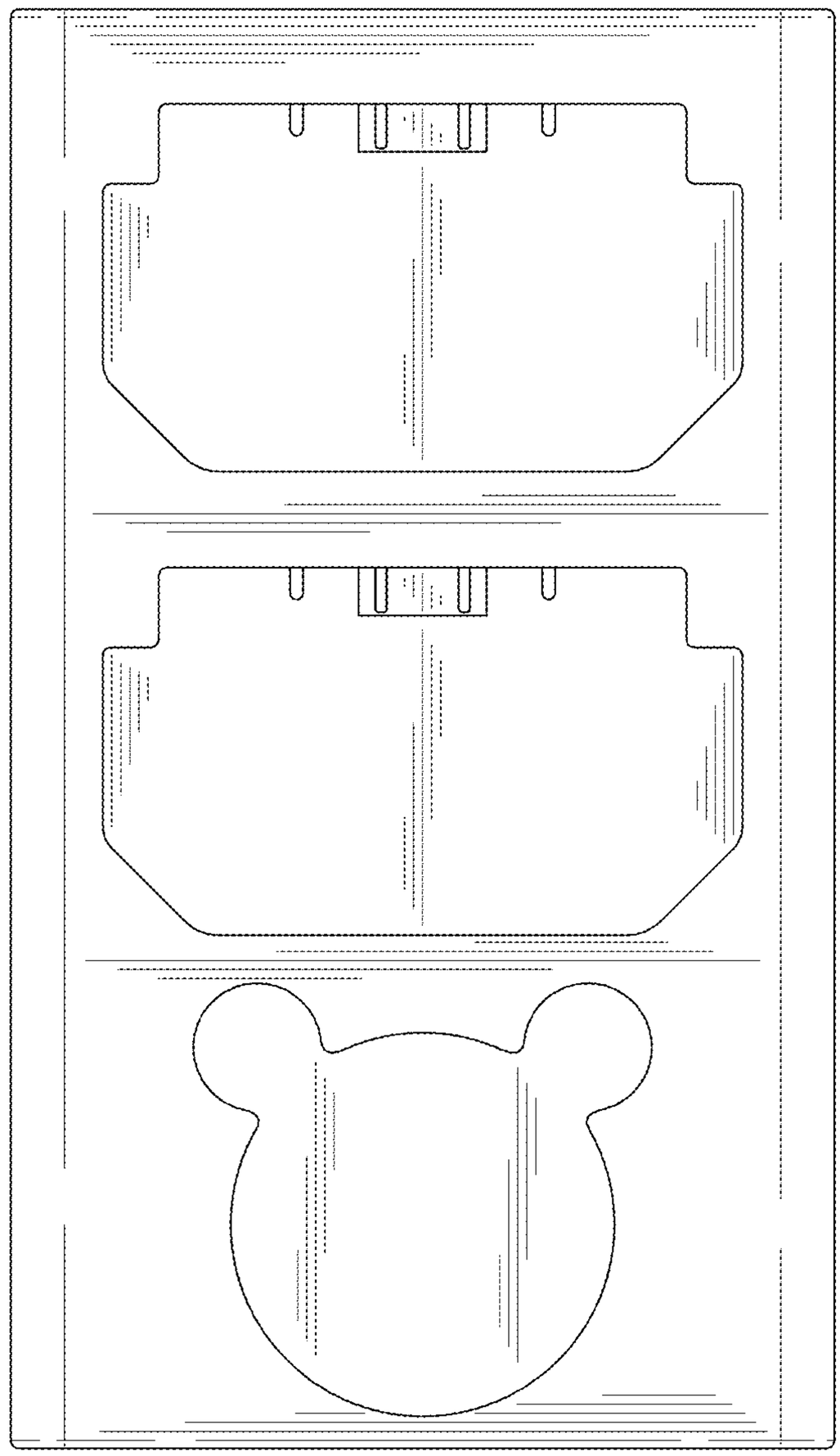

FIG. 7

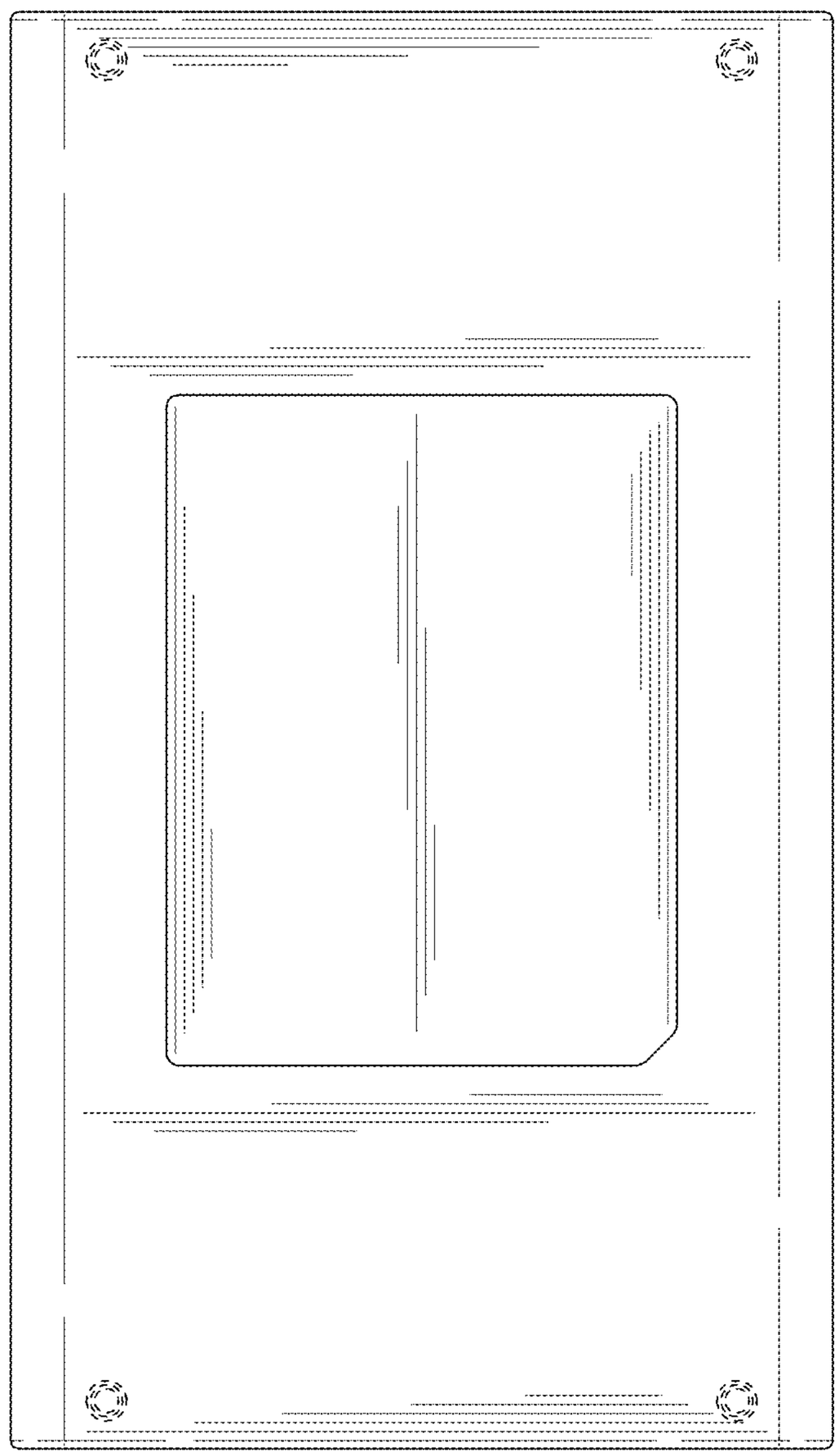

FIG. 8