US00D971068S

(12) United States Design Patent

Turner

(10) Patent No.: US D971,068 S
(45) Date of Patent: ** Nov. 29, 2022

(54) **WATCHBAND BOTTLE OPENER APPARATUS**

(71) Applicant: **Casey Turner**, San Diego, CA (US)

(72) Inventor: **Casey Turner**, San Diego, CA (US)

(**) Term: **15 Years**

(21) Appl. No.: **29/702,205**

(22) Filed: **Aug. 16, 2019**

(51) **LOC (13) Cl.** **11-01**

(52) **U.S. Cl.**
USPC **D11/94**

(58) **Field of Classification Search**
USPC D11/3, 5, 11, 12, 13, 19, 20, 86–88, 94, D11/201, 218; D10/30, 32, 38
CPC A44C 5/00; A44C 5/12; A44C 5/14; A44C 5/18; B04B 37/00; B04B 37/008; B04B 37/04; B04B 37/18; G04B 19/00
See application file for complete search history.

(56) **References Cited**

U.S. PATENT DOCUMENTS

D470,794 S * 2/2003 Eddy D11/201
D474,713 S * 5/2003 Eddy D11/201
D622,178 S * 8/2010 Kelleghan D11/201
8,205,527 B2 6/2012 Chenelia
D714,185 S * 9/2014 Kelleghan D11/218
D805,428 S * 12/2017 Fulop D11/218

* cited by examiner

Primary Examiner — Zenia I Bennett
(74) *Attorney, Agent, or Firm* — Buche & Associates, P.C.; John K. Buche; Bryce A. Johnson

(57) **CLAIM**

I claim the ornamental design for a watchband bottle opener apparatus, as shown and described.

DESCRIPTION

FIG. **1** is a front perspective view of a watchband bottle opener apparatus;
FIG. **2** is a top elevation view thereof;
FIG. **3** is a side perspective view thereof;
FIG. **4** is an end plan view thereof;
FIG. **5** is a side plan view thereof;
FIG. **6** is a bottom front perspective view thereof;
FIG. **7** is a bottom plan view thereof; and,
FIG. **8** is a bottom rear perspective view thereof.
Broken lines illustrate environmental features and form no part of the claimed design.

1 Claim, 8 Drawing Sheets

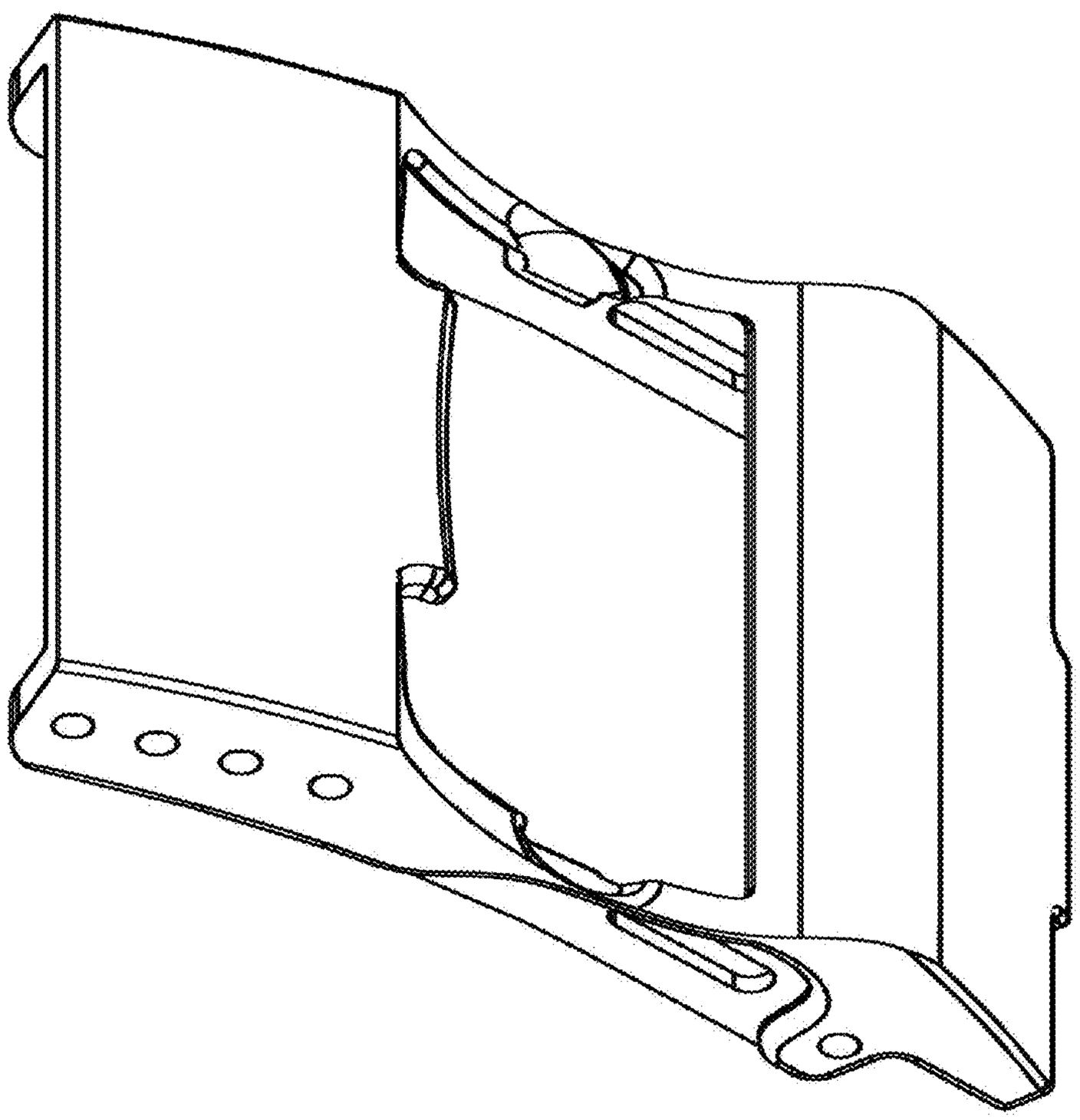

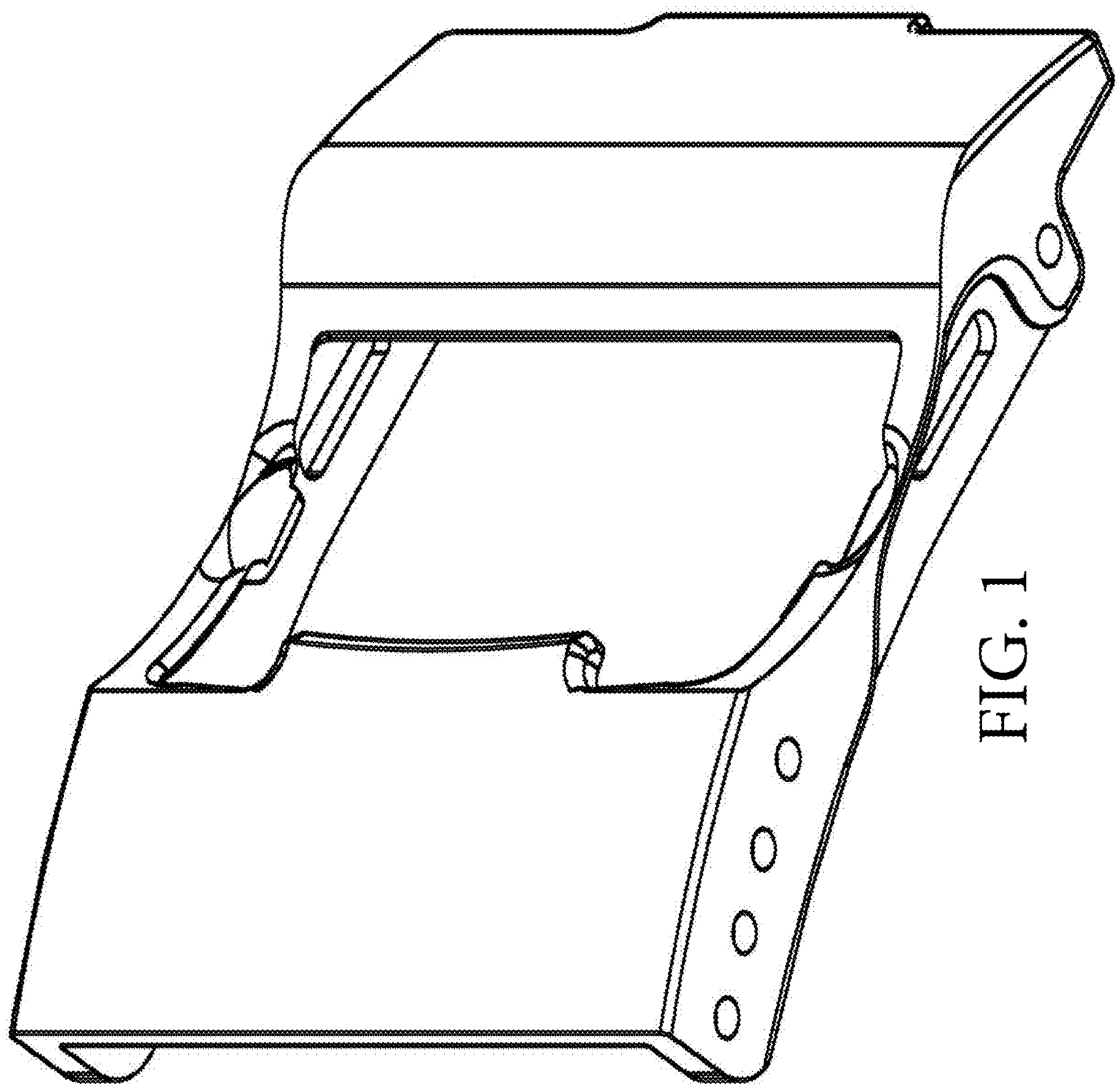

FIG. 1

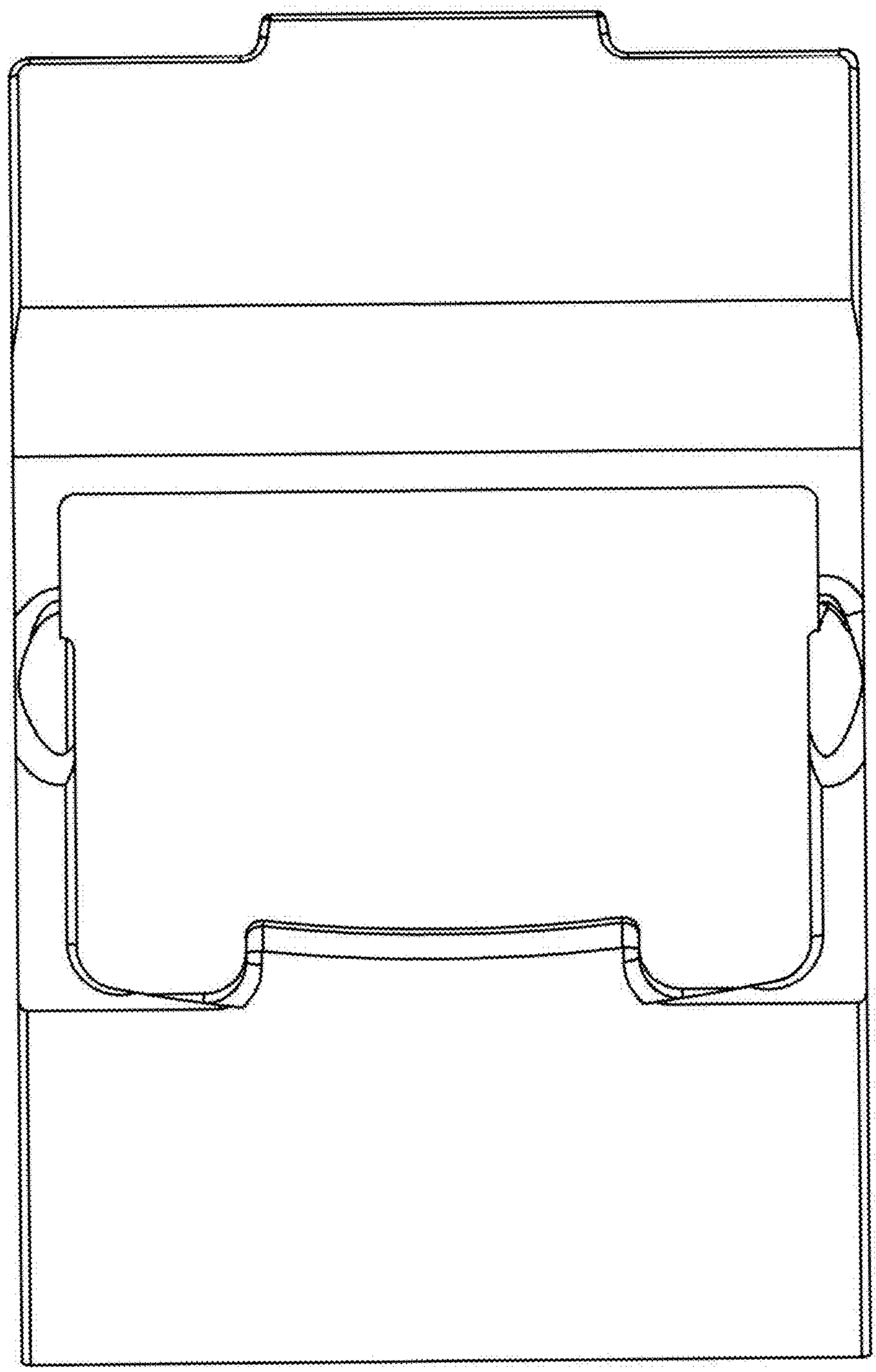

FIG. 2

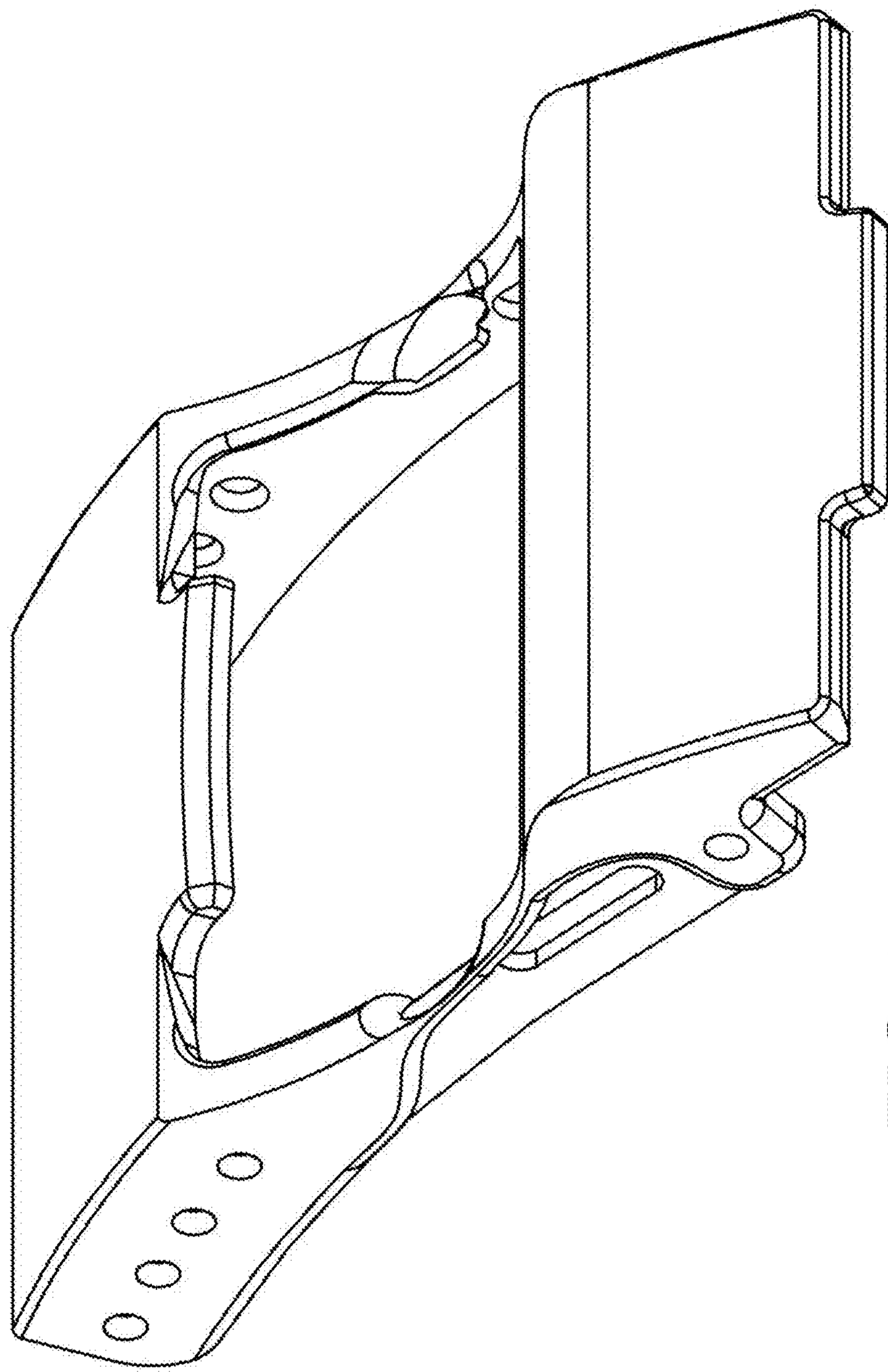

FIG. 3

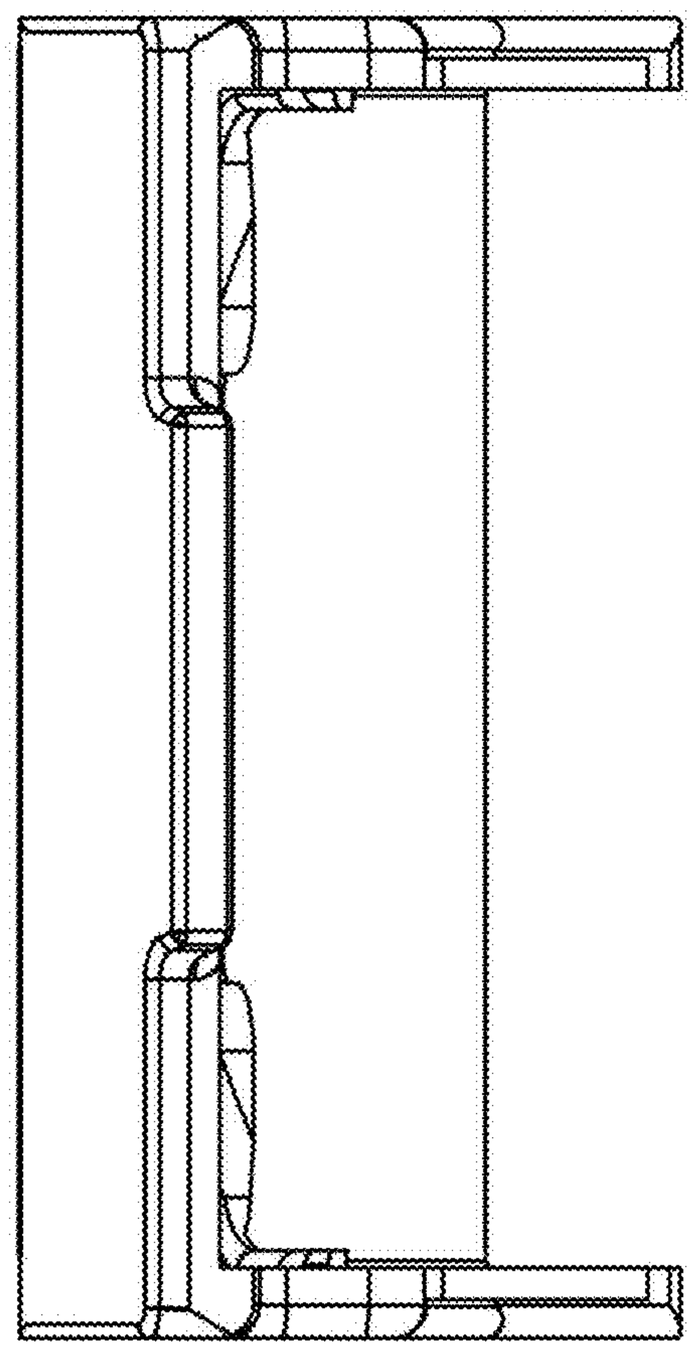

FIG. 4

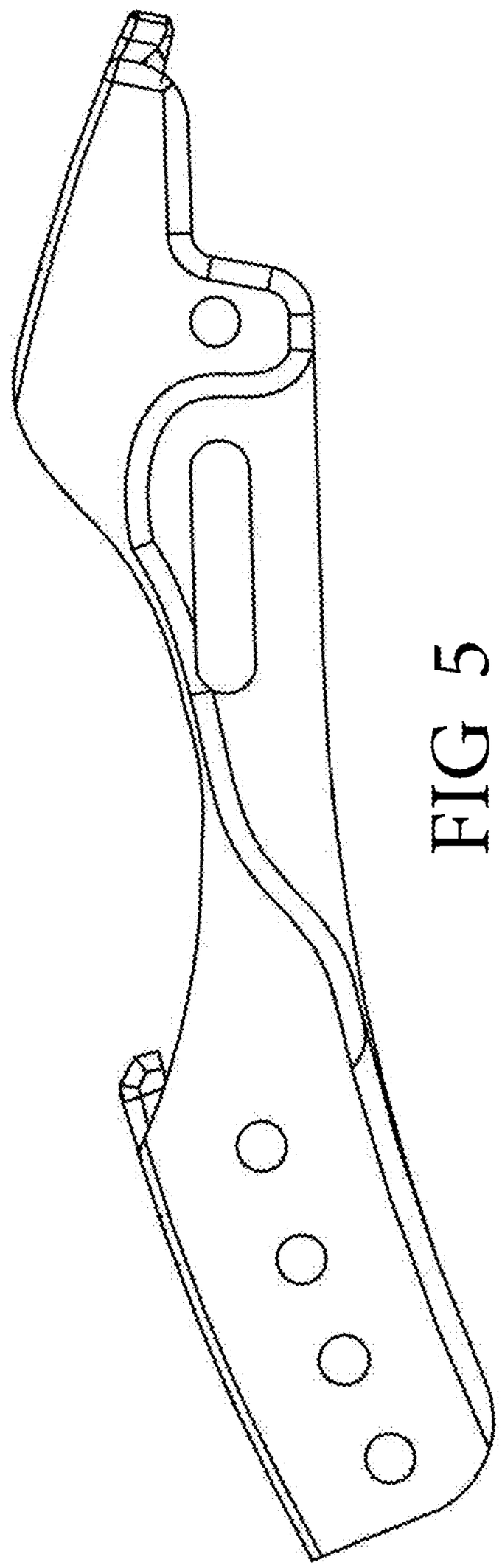

FIG 5

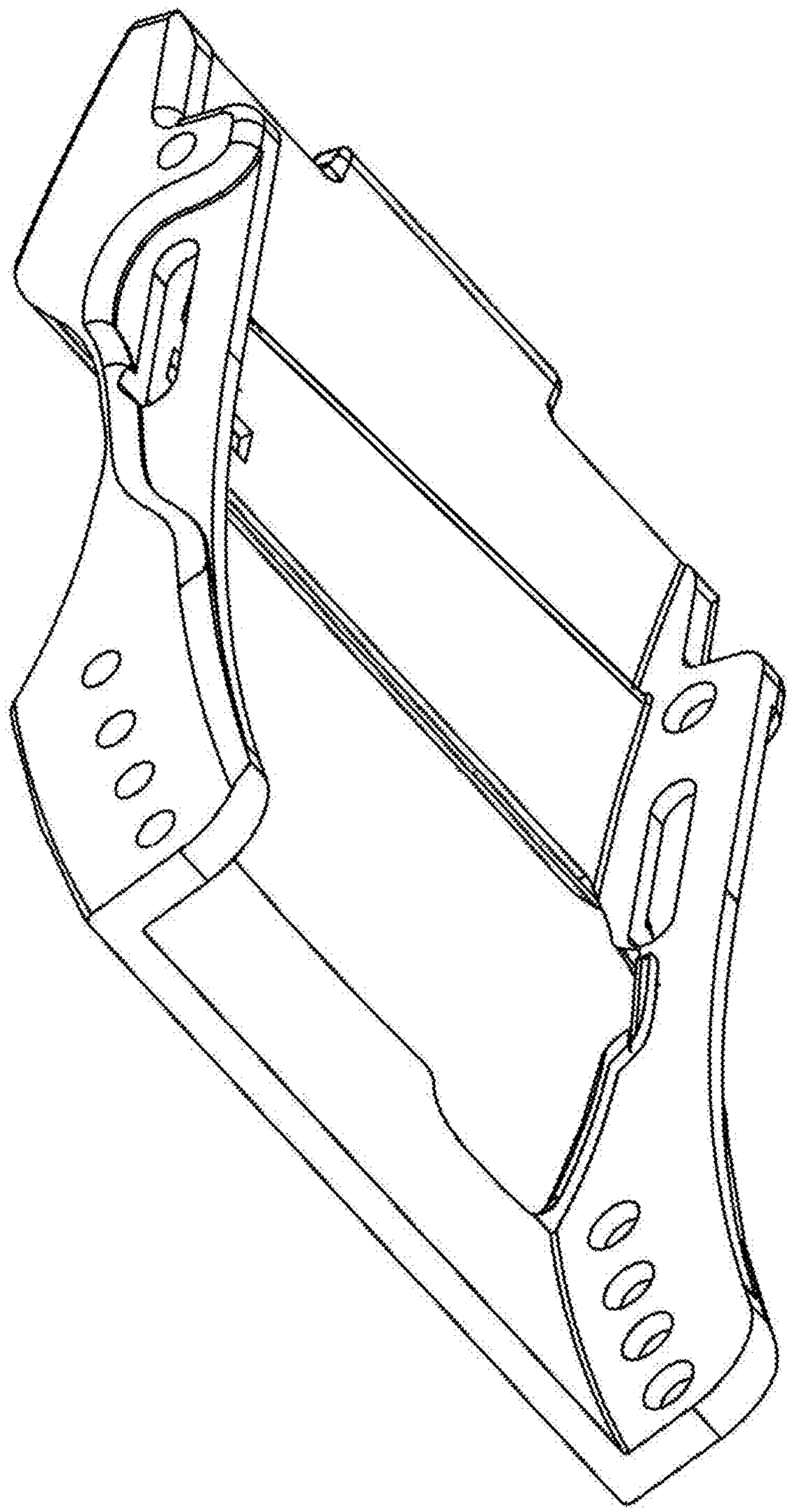

FIG. 6

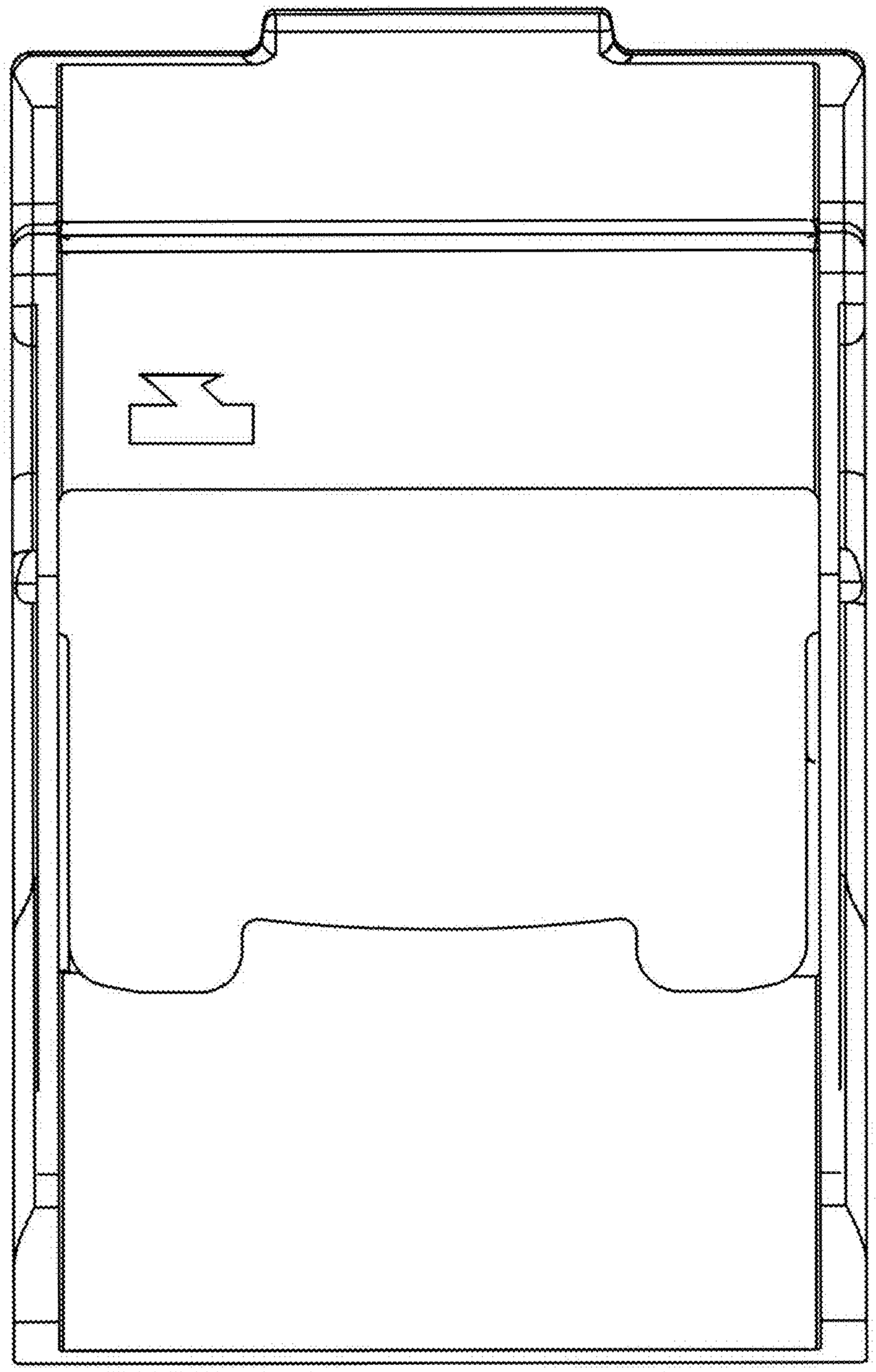

FIG. 7

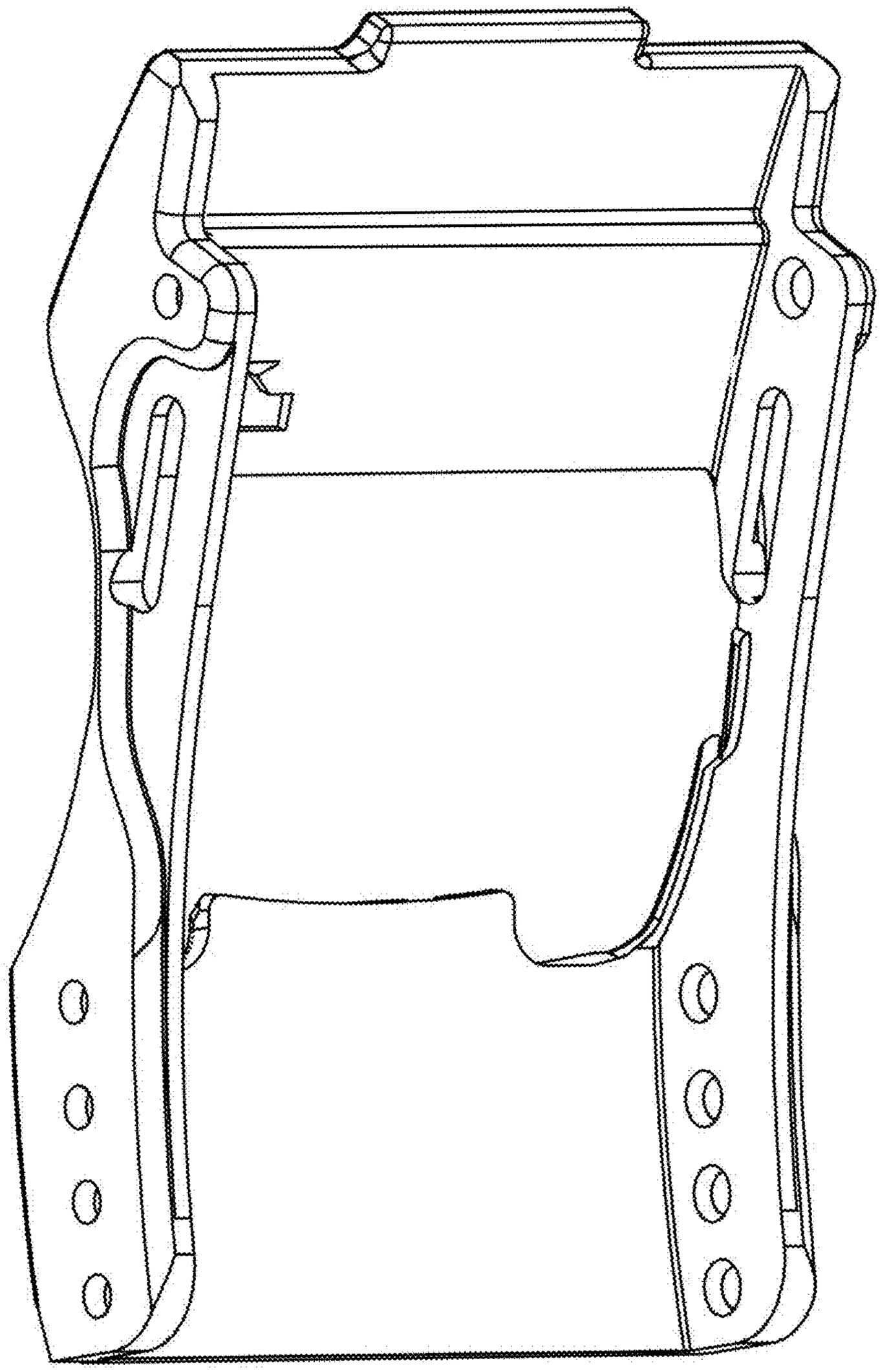

FIG. 8