US00D969119S

(12) United States Design Patent

Li et al.

(10) Patent No.: US D969,119 S
(45) Date of Patent: ** Nov. 8, 2022

(54) **HOLDER FOR PORTABLE ELECTRONIC DEVICE**

(71) Applicant: **GETAC TECHNOLOGY CORPORATION**, Hsinchu County (TW)

(72) Inventors: **Chun-Hsing Li**, Taipei (TW); **Ssu-Yuan Wu**, Taipei (TW)

(73) Assignee: **GETAC TECHNOLOGY CORPORATION**, Hsinchu County (TW)

(**) Term: **15 Years**

(21) Appl. No.: **29/752,177**

(22) Filed: **Sep. 25, 2020**

(51) **LOC (13) Cl.** **14-03**

(52) **U.S. Cl.**
USPC **D14/238**

(58) **Field of Classification Search**
USPC D3/247; D6/406.3, 406.4, 406.5, 406.6, D6/580; D12/415, 421; D13/108; D14/238
CPC F16B 2/12; F16M 11/22; A45C 2011/186
See application file for complete search history.

(56) **References Cited**

U.S. PATENT DOCUMENTS

D281,144	S	*	10/1985	Astolfi	D6/300
D587,715	S	*	3/2009	Davis	D14/432
D591,302	S	*	4/2009	Yagi	D14/421
D667,012	S	*	9/2012	Chen	D14/447
D725,116	S	*	3/2015	Li	D14/440
D747,317	S	*	1/2016	Oakley	D14/432
D756,361	S	*	5/2016	Huang	D14/421
D772,216	S	*	11/2016	Lau	D14/434
D813,529	S	*	3/2018	Li	D3/218
D868,073	S	*	11/2019	Smith	D14/447
D878,381	S	*	3/2020	Li	D14/447
D954,025	S	*	6/2022	Li	D14/217

OTHER PUBLICATIONS

[Demo Days: Getac Video Solutions], announced in YouTube on Nov. 30, 2020 [online], [site visited Jul. 8, 2022], Available from the internet URL: https://www.youtube.com/watch?v=NhVbKv-ls8M (Year: 2020).*

* cited by examiner

Primary Examiner — Khawaja Anwar
Assistant Examiner — Megan Tiana Rakos

(57) **CLAIM**

The ornamental design for a holder for portable electronic device, as shown and described.

DESCRIPTION

FIG. **1** is a top, front, and right side perspective view of a holder for portable electronic device, showing our new design;
FIG. **2** is a bottom, front, and left side perspective view thereof;
FIG. **3** is a bottom, rear, and right side perspective view thereof;
FIG. **4** is a top, rear, and left side perspective view thereof;
FIG. **5** is a front view thereof;
FIG. **6** is a rear view thereof;
FIG. **7** is a left side view thereof;
FIG. **8** is a right side view thereof;
FIG. **9** is a top view thereof;
FIG. **10** is a bottom view thereof; and,
FIG. **11** is a top, front, and right side perspective view thereof with a portable electronic.
The dash lines in the figures illustrate the portions of the holder for portable electronic device that form no part of the claimed design.
The dot-dot-dash lines represent a boundary that forms no part of the claimed.

1 Claim, 11 Drawing Sheets

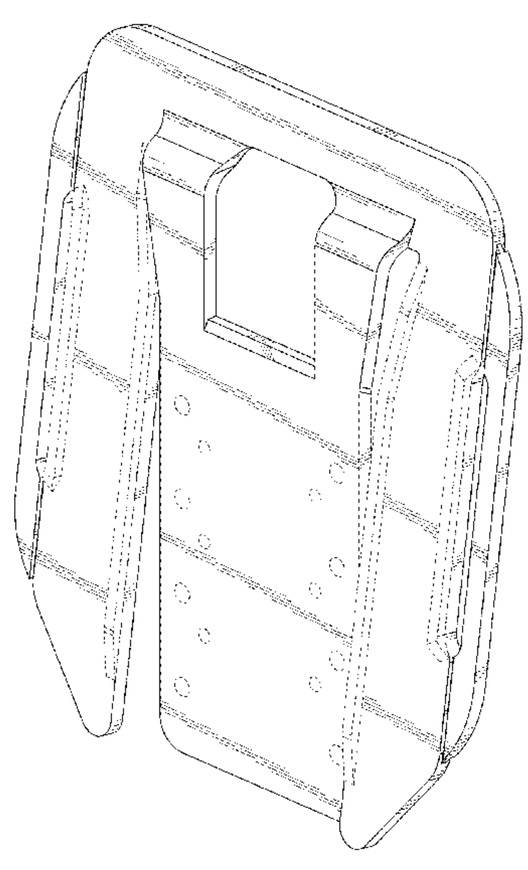

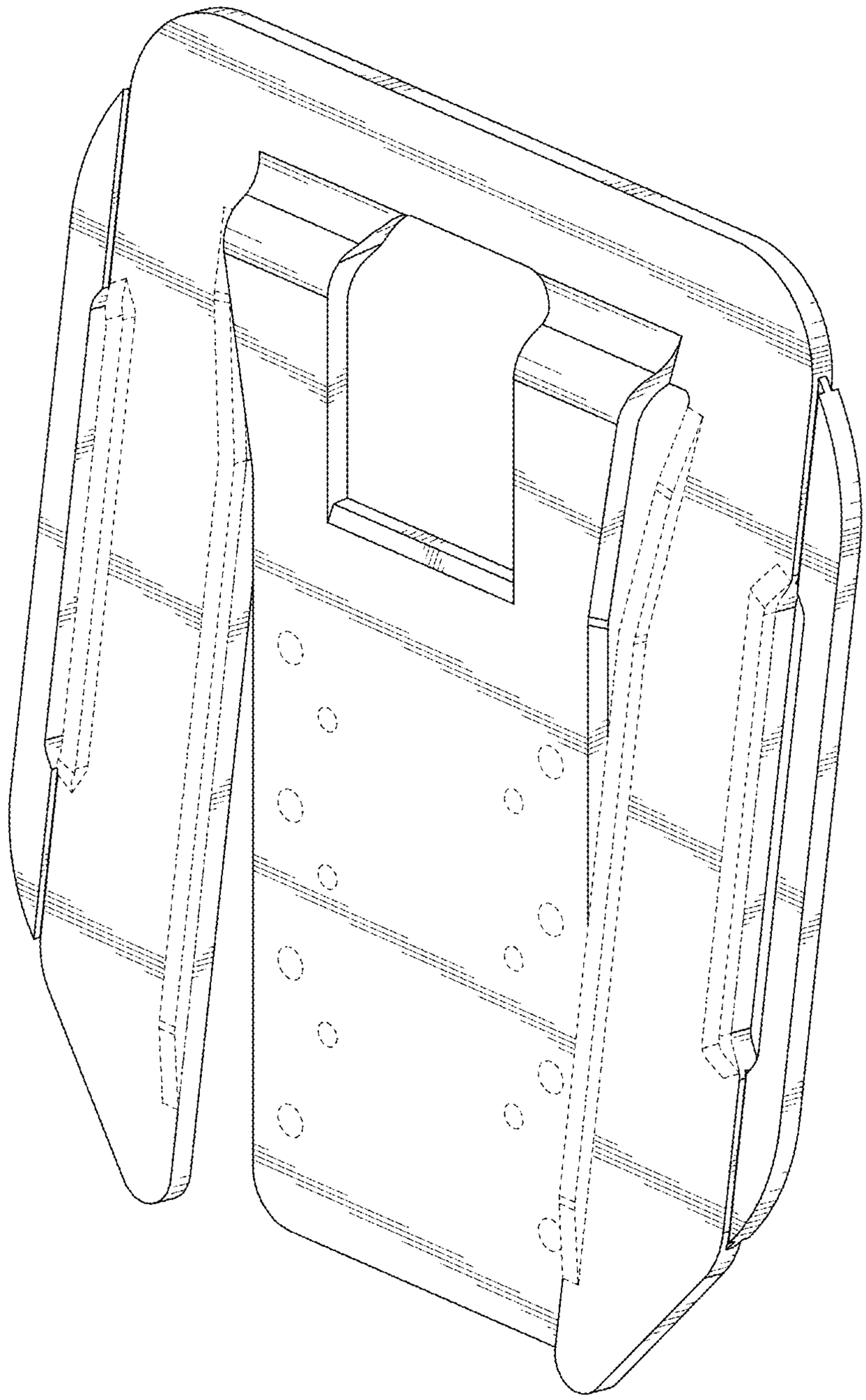

FIG. 1

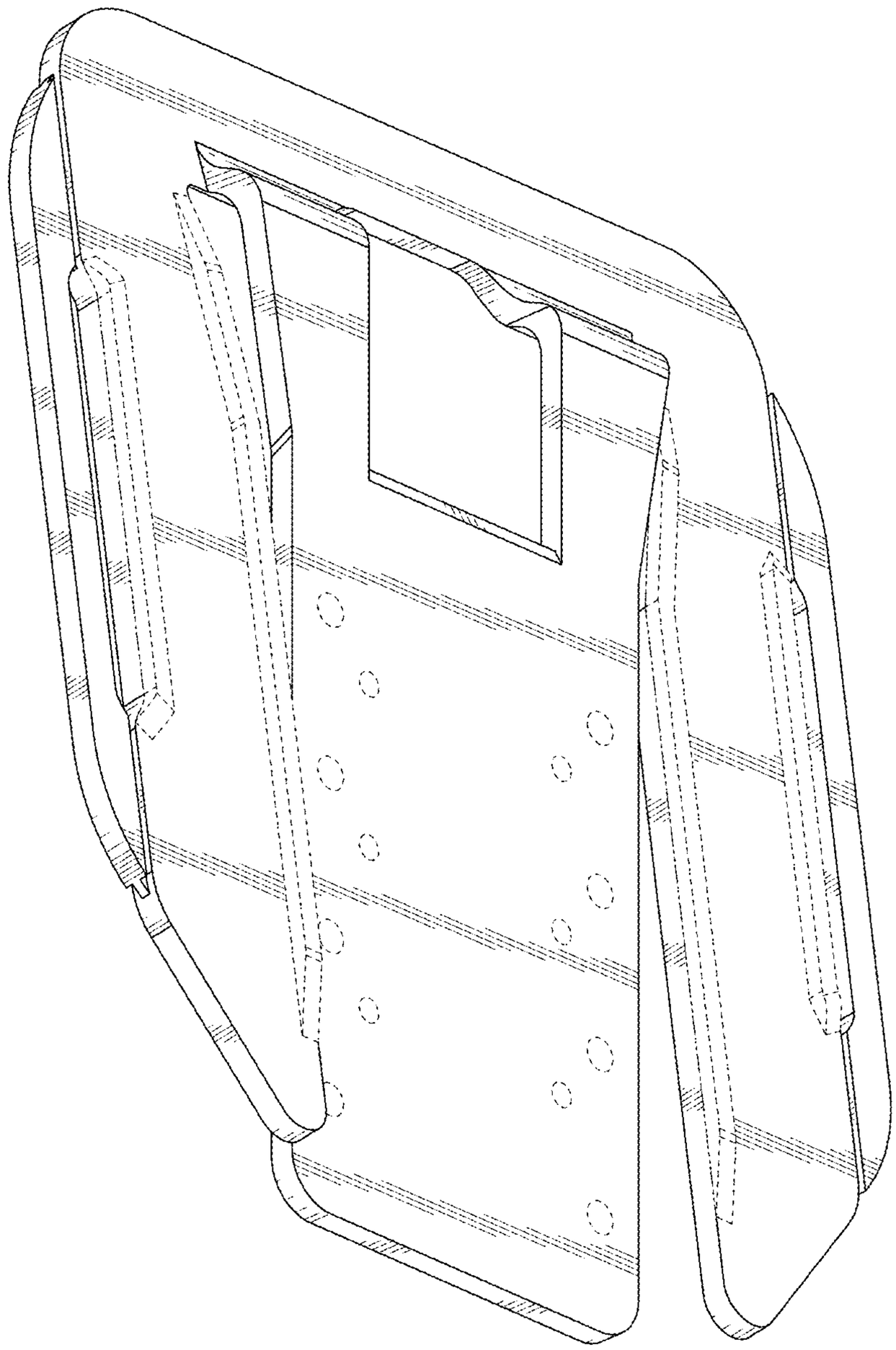

FIG. 2

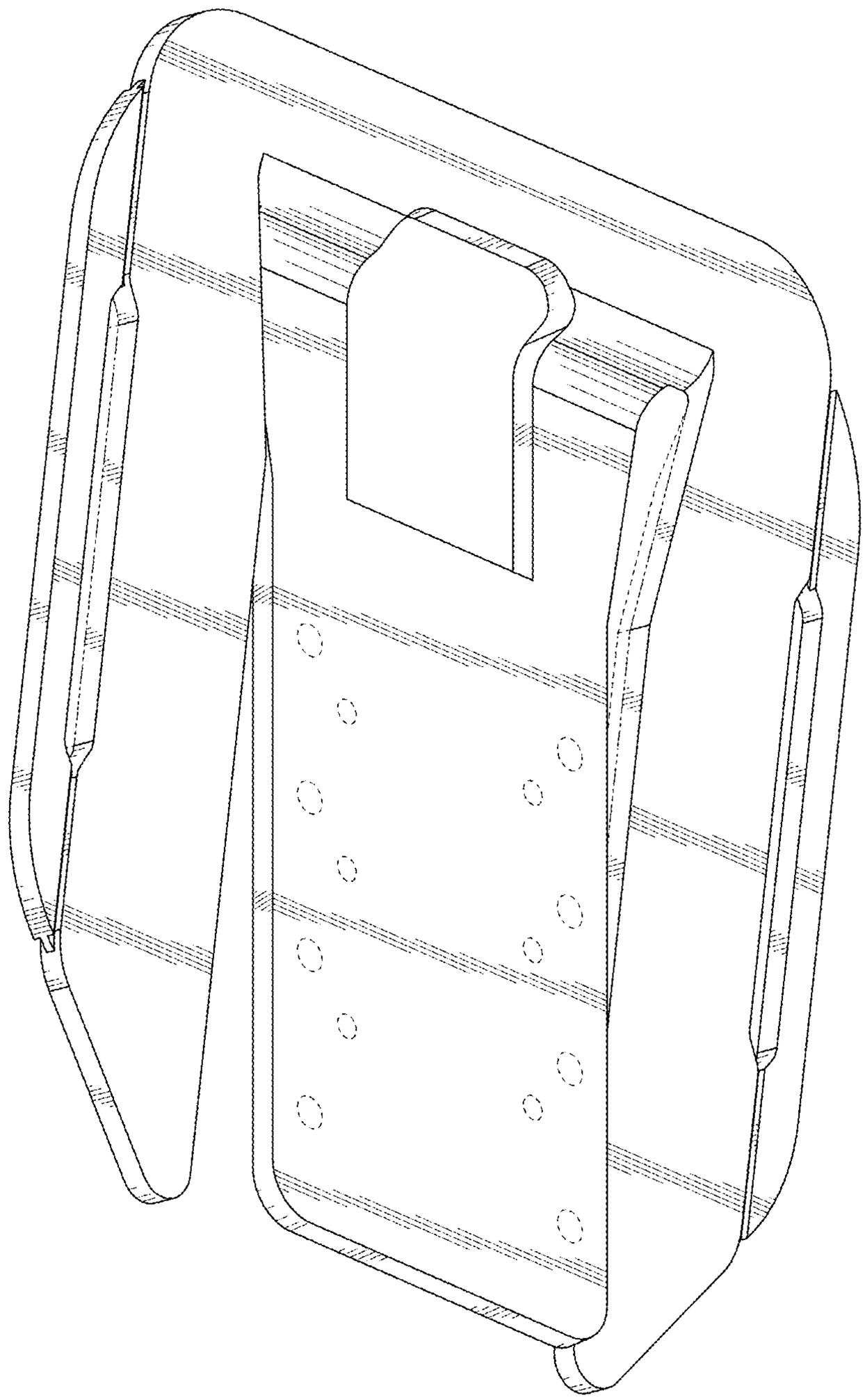

FIG. 3

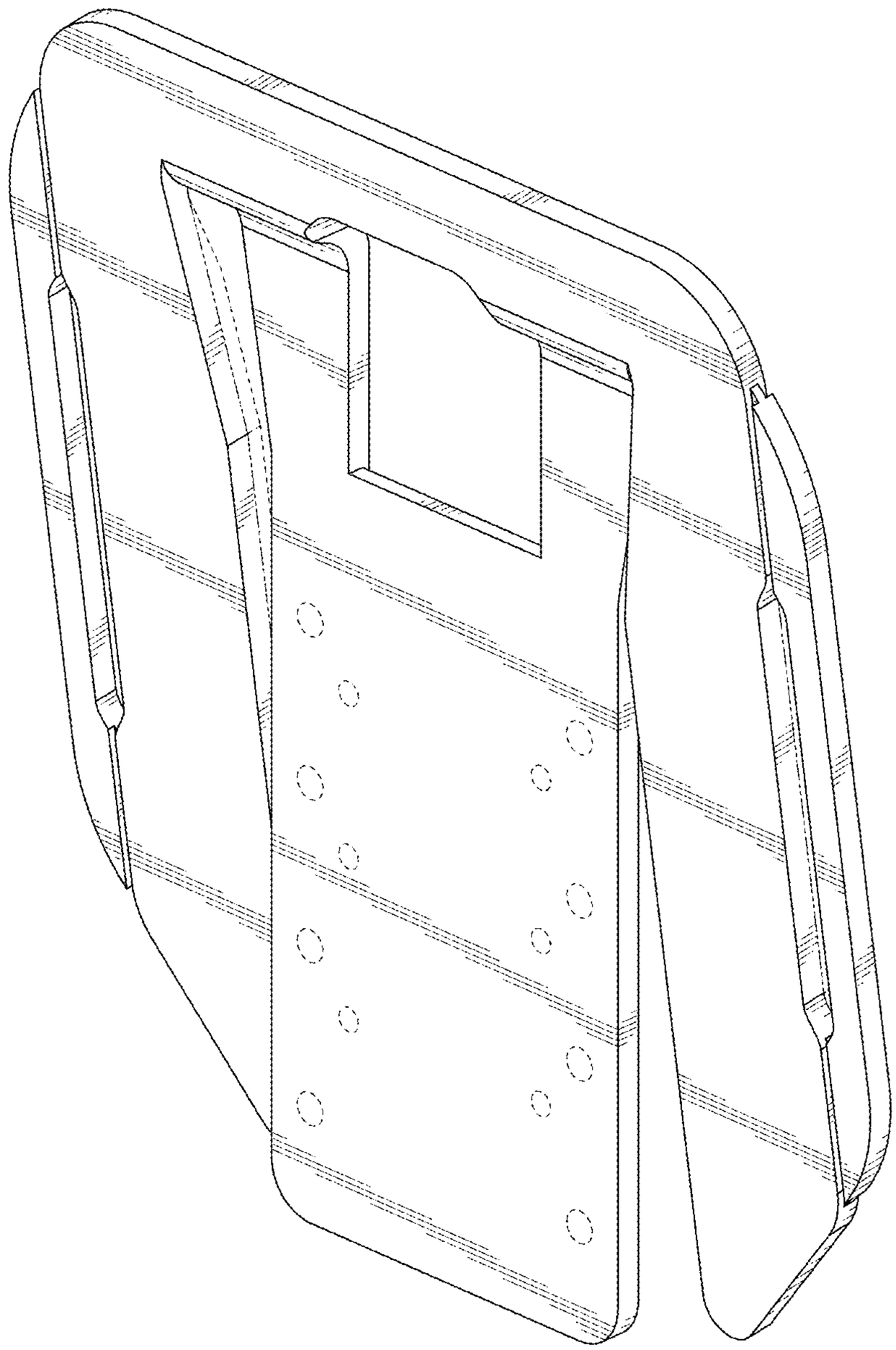

FIG. 4

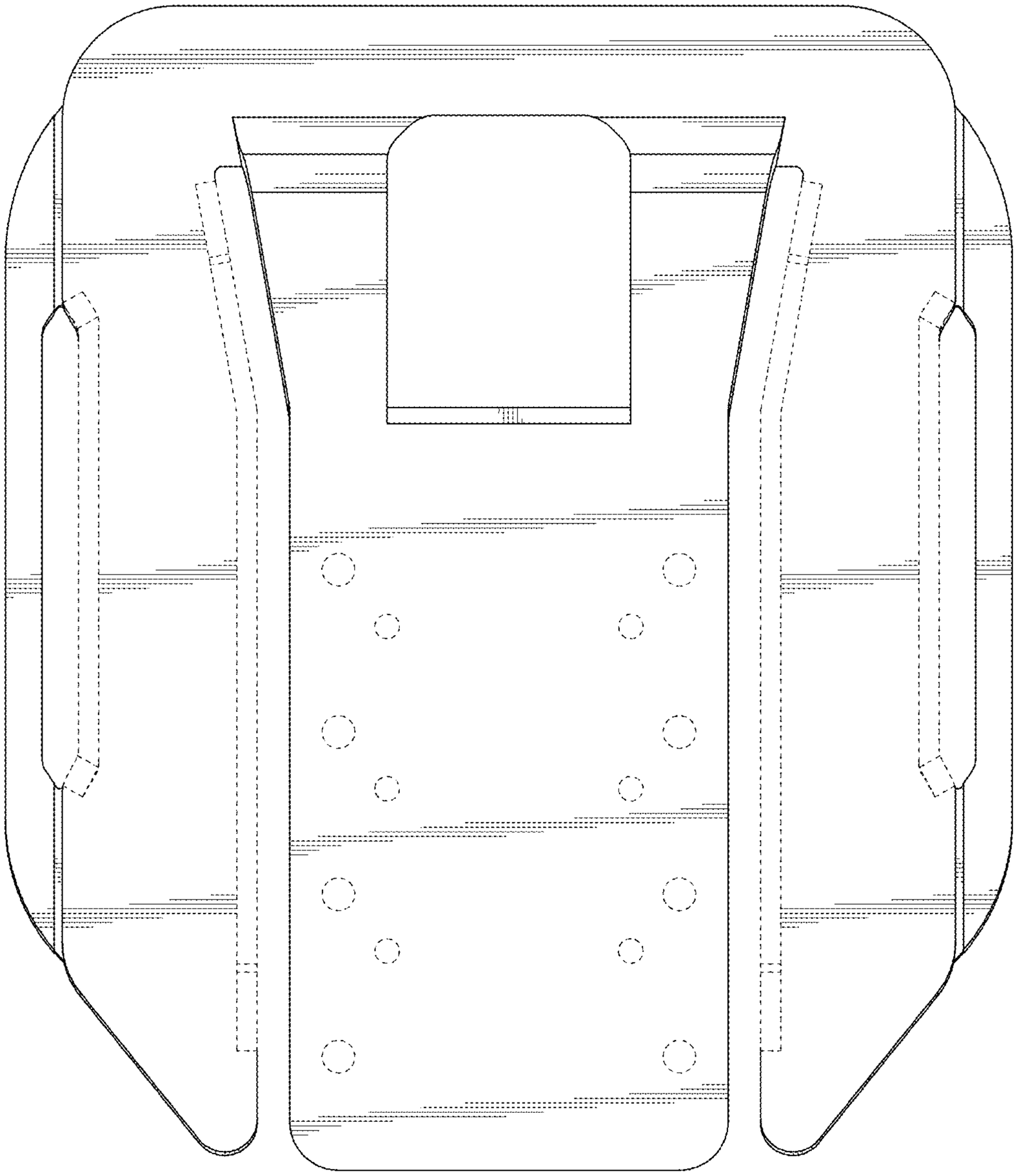

FIG. 5

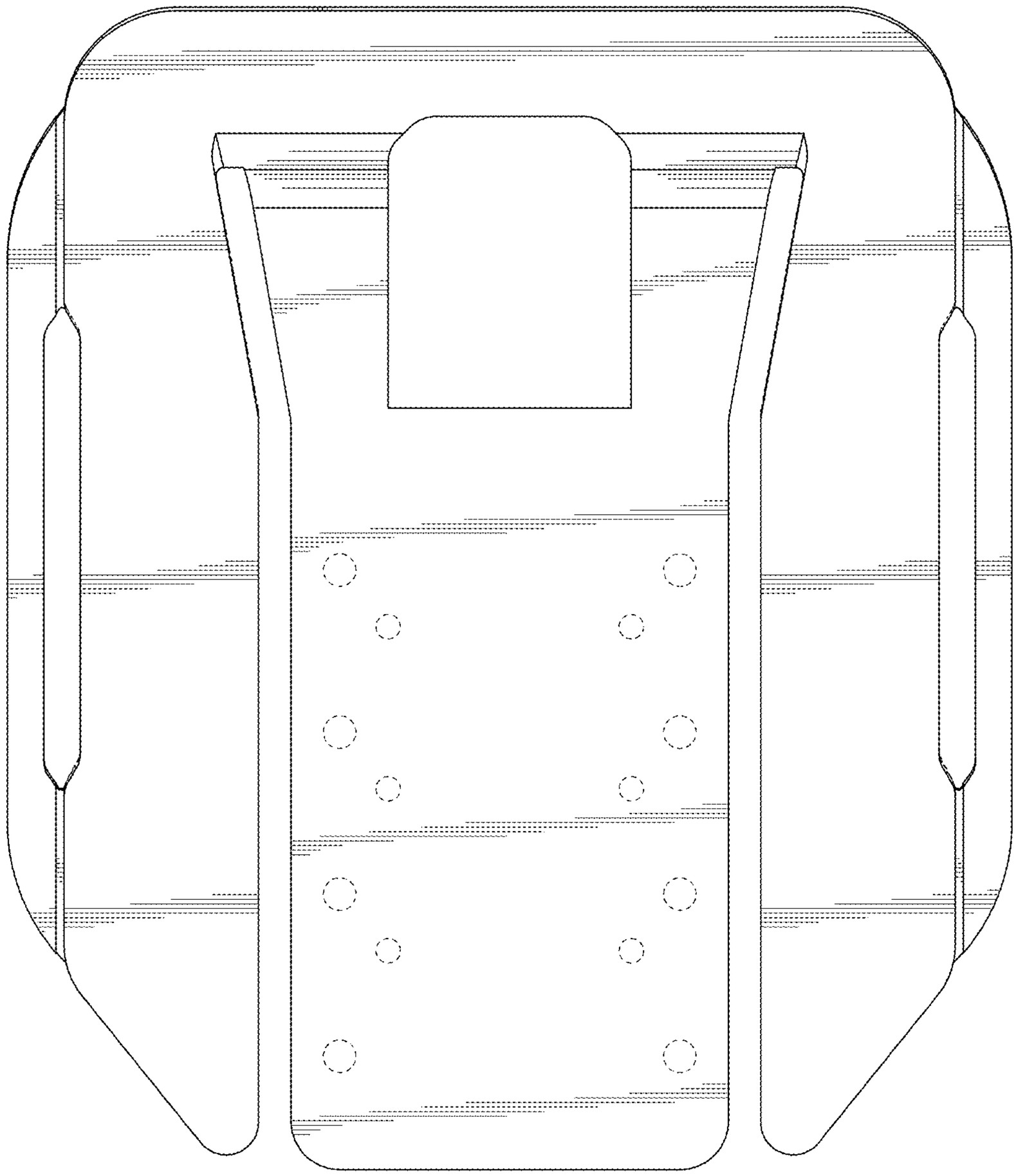

FIG. 6

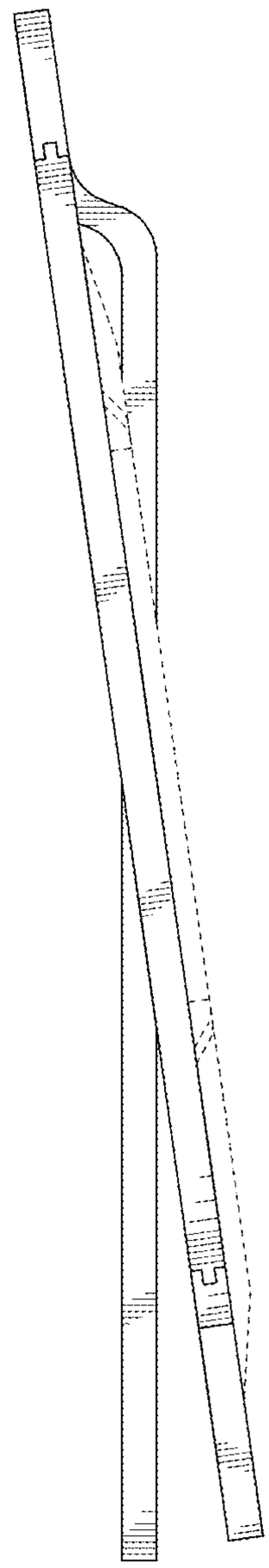

FIG. 7

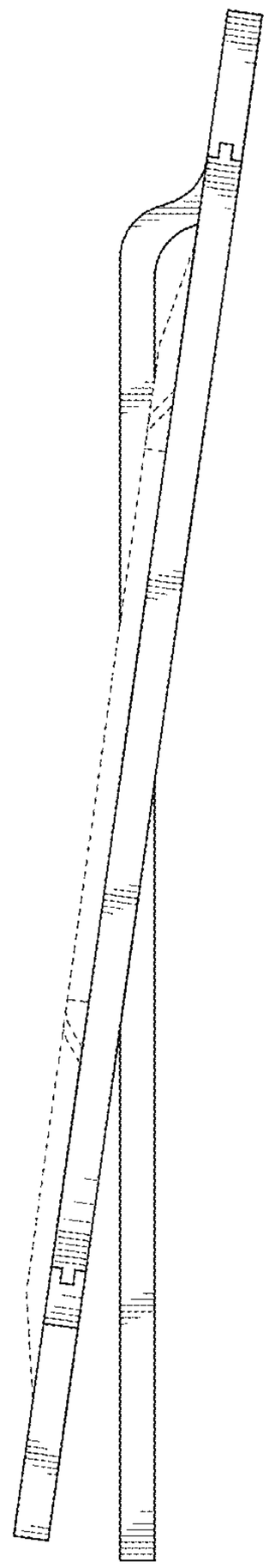

FIG. 8

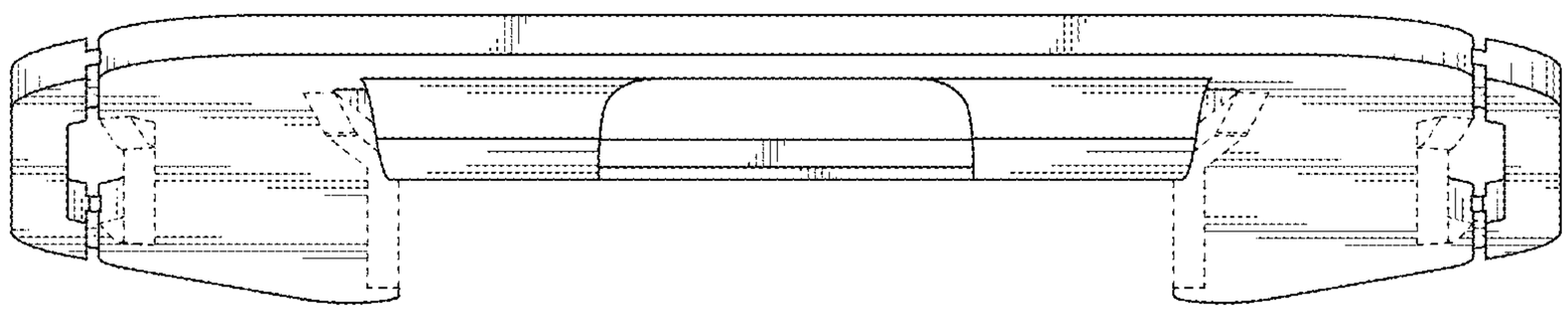

FIG. 9

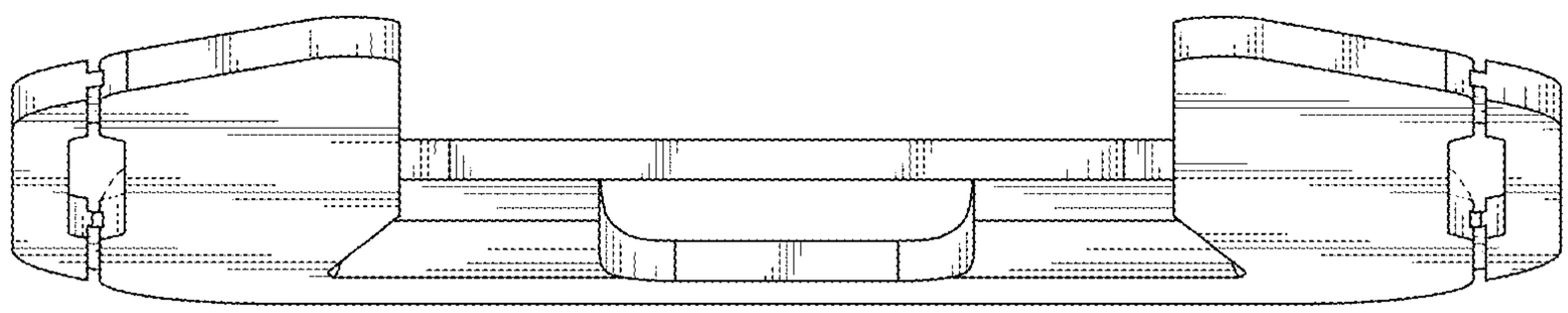

FIG. 10

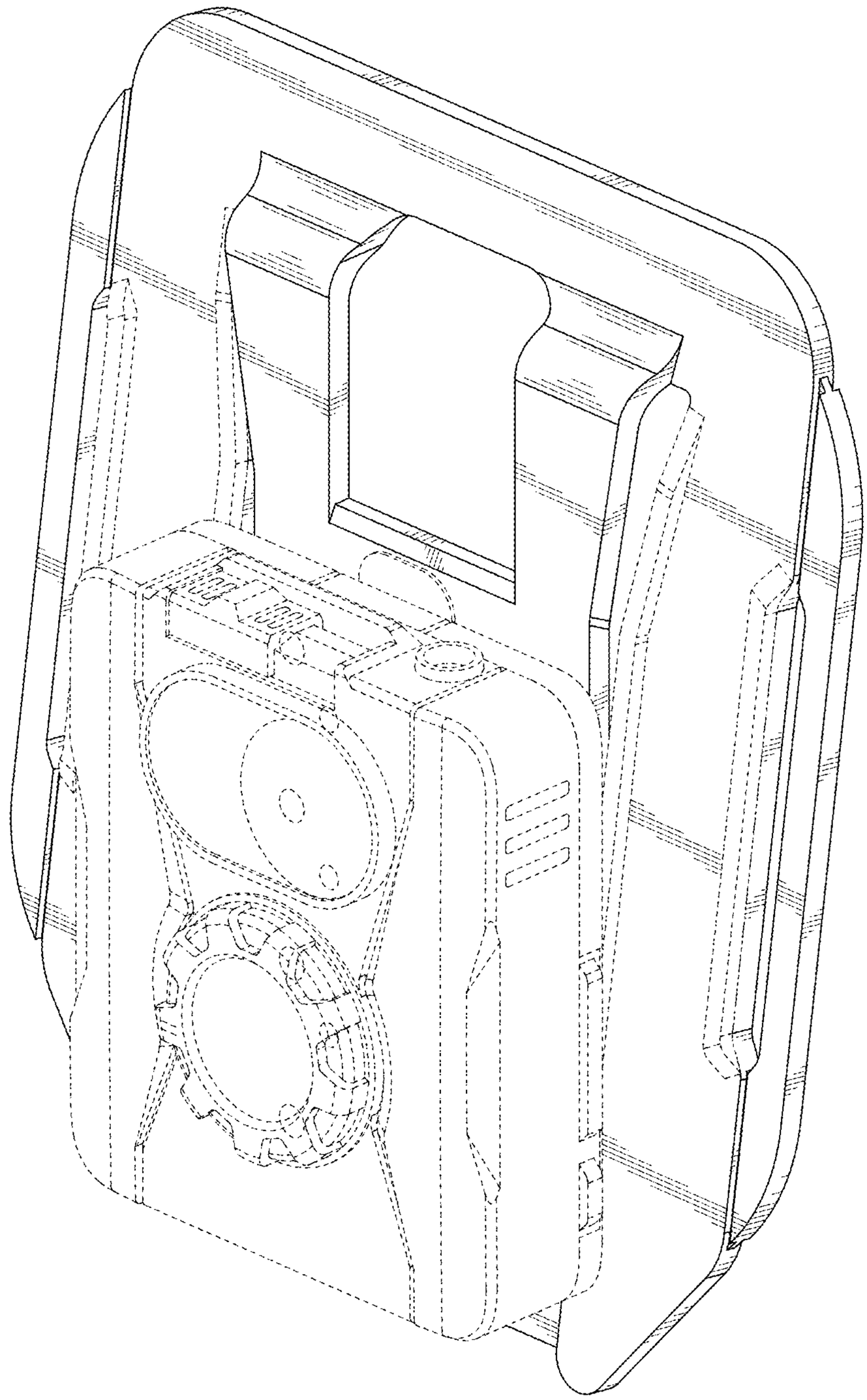

FIG. 11