US00D968606S

(12) United States Design Patent

Vanner

(10) Patent No.: US D968,606 S
(45) Date of Patent: ** Nov. 1, 2022

(54) **SURGICAL BLADE**

(71) Applicant: **Richard Vanner**, Cheltenham (GB)

(72) Inventor: **Richard Vanner**, Cheltenham (GB)

(73) Assignee: **Richard Vanner**, Cheltenham (GB)

(**) Term: **15 Years**

(21) Appl. No.: **29/668,937**

(22) Filed: **Nov. 2, 2018**

(30) **Foreign Application Priority Data**

May 12, 2018 (EM) 005267085-0002

(51) **LOC (13) Cl.** **24-02**

(52) **U.S. Cl.**
USPC **D24/148**

(58) **Field of Classification Search**
USPC D8/47, 98, 101; D24/112, 130, 133, D24/144–148
CPC A61B 17/3211; A61B 17/3213; A61B 17/3215; A61B 17/3217; A61B 2017/32113; A61B 2090/061
See application file for complete search history.

(56) **References Cited**

U.S. PATENT DOCUMENTS

3,609,864 A * 10/1971 Bassett A61B 17/3213 30/261
3,898,735 A * 8/1975 Himeno B26B 5/005 30/294
4,520,810 A * 6/1985 Weiss A61M 16/0472 128/200.26
4,556,059 A * 12/1985 Adamson, Jr. A61M 16/0472 128/207.14
5,447,516 A * 9/1995 Gardner A61B 17/3213 30/304
6,612,379 B1 * 9/2003 Timmons A01B 1/02 172/375
D561,338 S * 2/2008 Blanco D24/146
D660,422 S * 5/2012 Hermle D24/133
D747,170 S * 1/2016 Lindley D8/98
D749,730 S * 2/2016 Dietz D24/146
9,452,273 B2 * 9/2016 Levitan A61B 17/3211
D776,276 S * 1/2017 Witt D24/146
2005/0279363 A1 * 12/2005 Cruz A61M 16/0472 128/207.29
2017/0326318 A1 * 11/2017 Vanner A61M 16/0472

FOREIGN PATENT DOCUMENTS

EM 002910372-0001 12/2015
EM 005134178-0001 3/2018

* cited by examiner

Primary Examiner — L. A. Grabenstetter
(74) *Attorney, Agent, or Firm* — Levy & Grandinetti

(57) **CLAIM**

I claim the ornamental design for a surgical blade, as shown and described.

DESCRIPTION

FIG. **1** is a perspective view of a surgical blade;
FIG. **2** is a front side view of the surgical blade;
FIG. **3** is a rear side view of the surgical blade;
FIG. **4** is a top plan view of the surgical blade;
FIG. **5** is a bottom plan view of the surgical blade;
FIG. **6** is a right side view of the surgical blade; and,
FIG. **7** is a left side view of the surgical blade.

1 Claim, 4 Drawing Sheets

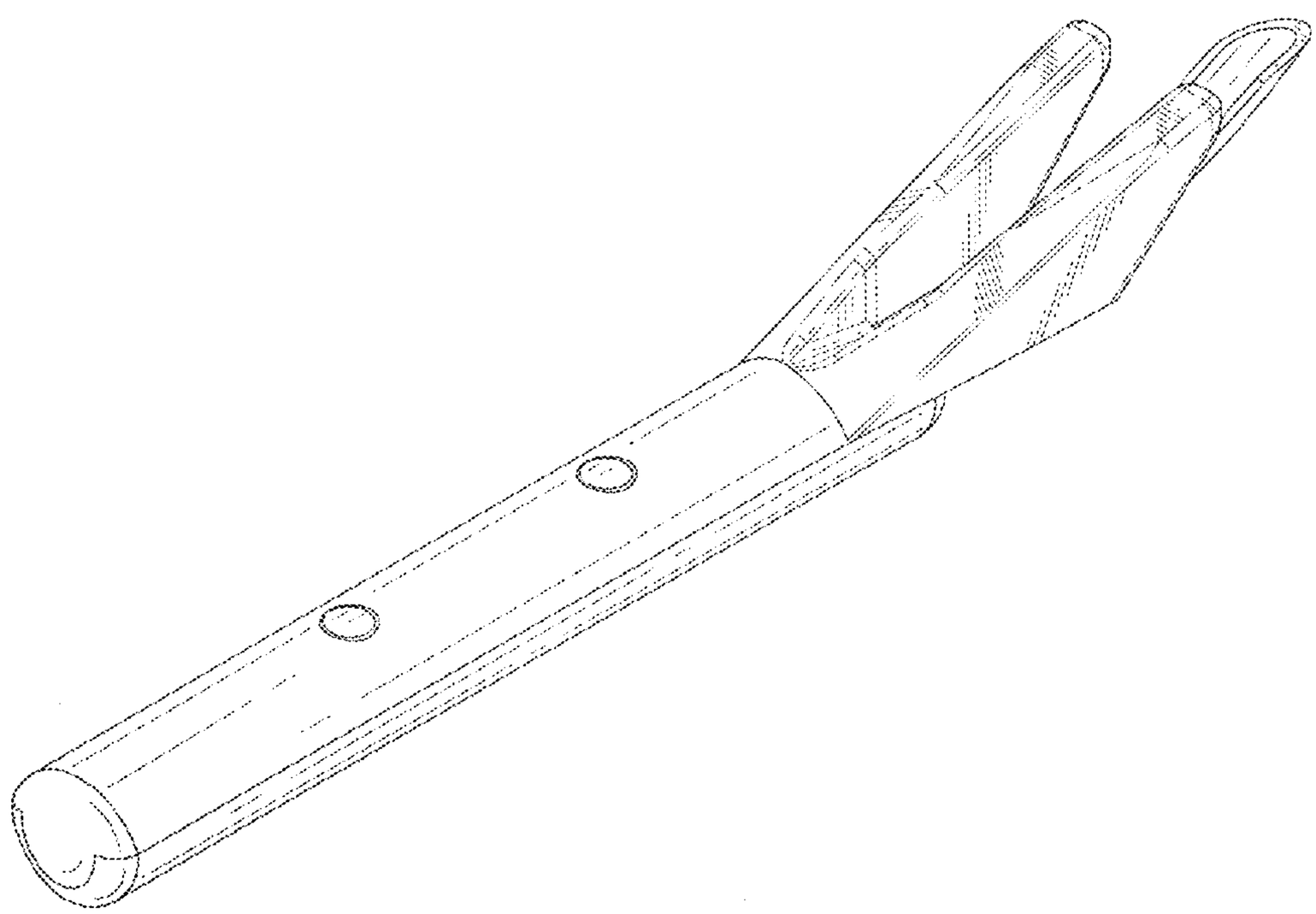

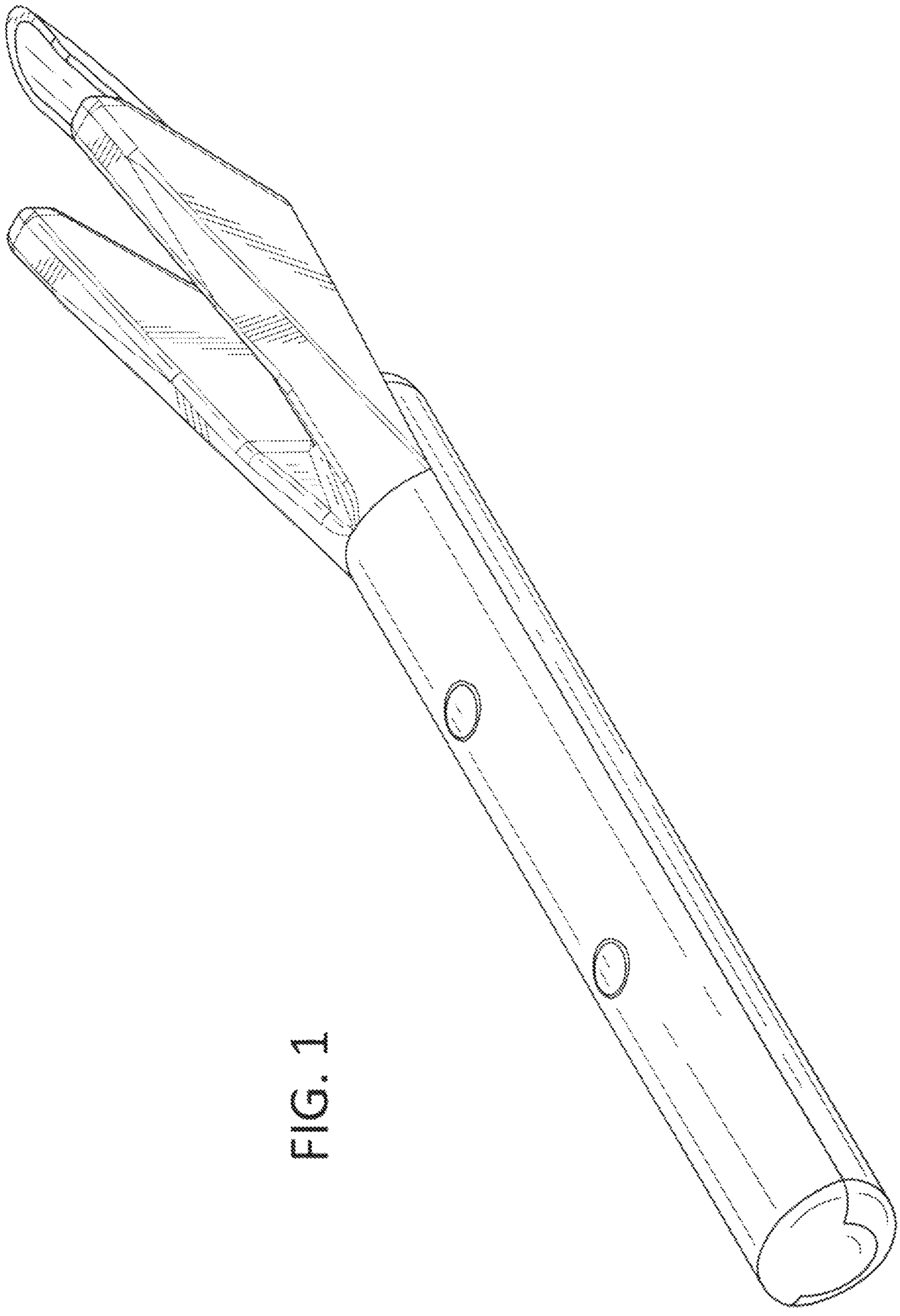

FIG. 1

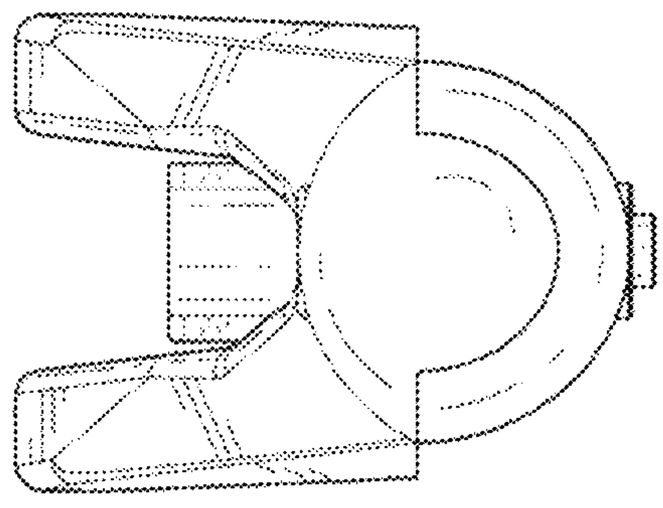

FIG. 3

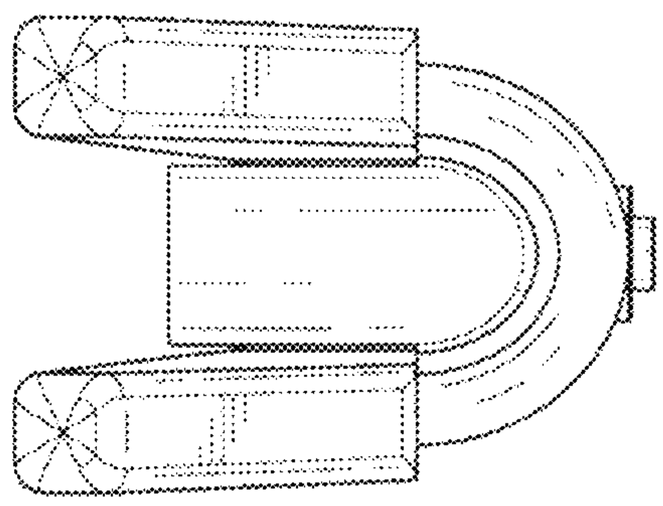

FIG. 2

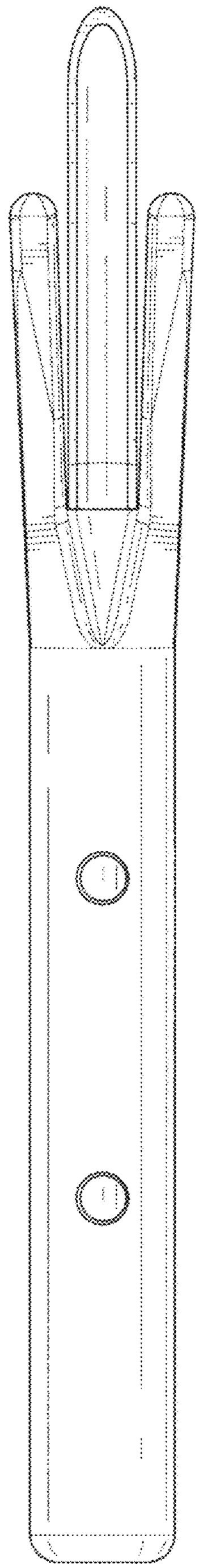

FIG. 4

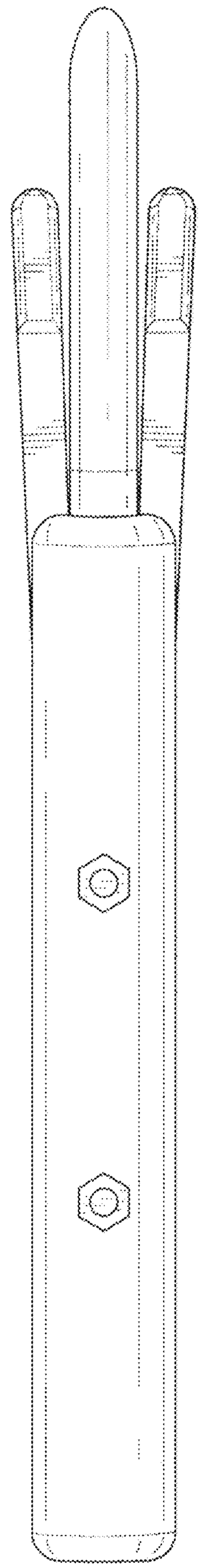

FIG. 5

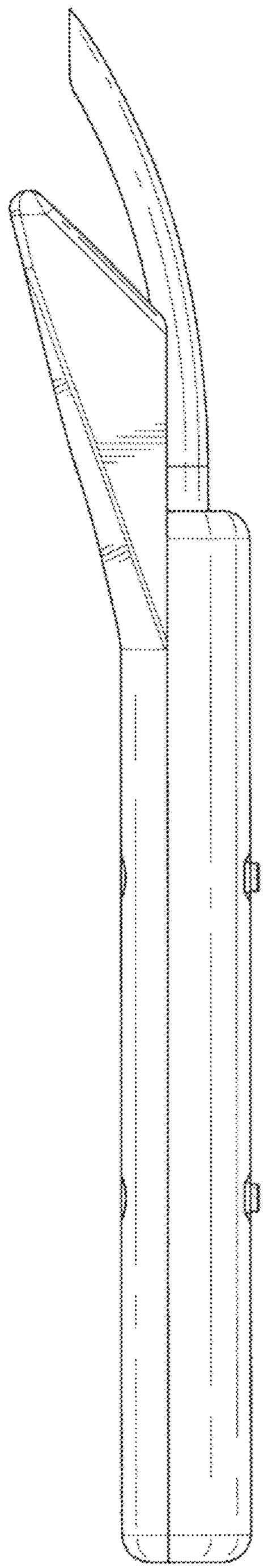

FIG. 6

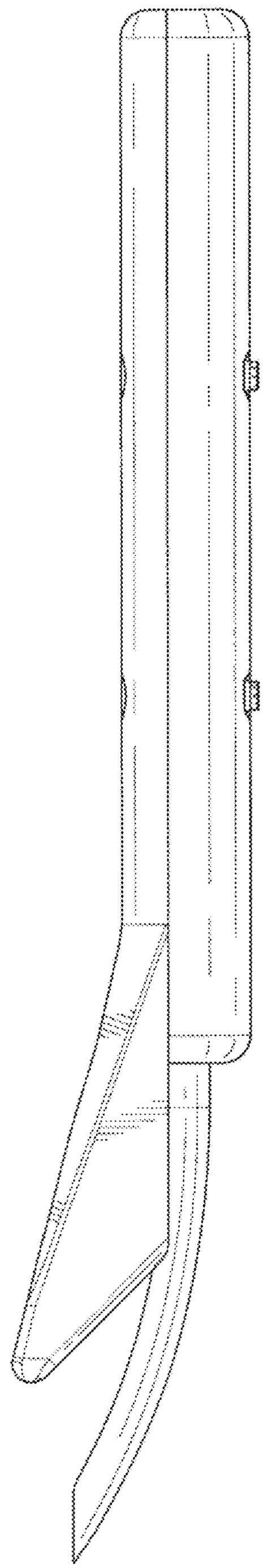

FIG. 7