US00D968072S

(12) United States Design Patent

Yang

(10) Patent No.: US D968,072 S
(45) Date of Patent: ** Nov. 1, 2022

(54) **BACKPACK**

(71) Applicant: **Yipeng Yang**, Guangzhou (CN)

(72) Inventor: **Yipeng Yang**, Guangzhou (CN)

(**) Term: **15 Years**

(21) Appl. No.: **29/807,634**

(22) Filed: **Sep. 13, 2021**

(51) **LOC (13) Cl.** **03-01**

(52) **U.S. Cl.**
USPC **D3/216**

(58) **Field of Classification Search**
USPC D3/213–217, 221, 224–233, 242–244, D3/254–262
CPC A45F 3/00; A45F 3/005; A45F 3/02; A45F 3/04; A45F 3/042; A45F 3/047; A45F 3/06; A45F 3/08; A45F 3/10; A45F 2003/001; A45F 2003/002; A45F 2003/003; A45F 2003/006; A45F 2003/007; A45F 2003/008; A45F 2003/025; A45F 2003/045; A45F 2200/00; A45F 2200/05; A45F 2200/0525; A45F 2200/0533
See application file for complete search history.

(56) **References Cited**

U.S. PATENT DOCUMENTS

D340,354 S * 10/1993 Wrath D3/238
D436,437 S * 1/2001 Guyon D3/242
D436,722 S * 1/2001 Larko D3/217
D441,528 S * 5/2001 Guyon D3/242
D460,614 S * 7/2002 Reimers D3/217
D471,013 S * 3/2003 Peterson D3/254
D487,189 S * 3/2004 Ukitsu D3/217
D766,571 S * 9/2016 Boroski D3/232
D768,981 S * 10/2016 Kliot D3/217
D772,562 S * 11/2016 Petre D3/216
D822,378 S * 7/2018 Franek D3/216
D834,895 S * 12/2018 Triska D3/216
D848,219 S * 5/2019 Munie D3/216
D853,201 S * 7/2019 Collie D3/216
D867,823 S * 11/2019 Jacobsen D3/216
(Continued)

FOREIGN PATENT DOCUMENTS

CN 306765316 * 8/2021
CN 307314005 * 5/2022
(Continued)

OTHER PUBLICATIONS

VKKZAAW Cooler Backpack, available at amazon.com, earliest date available Oct. 6, 2021 [online], site visited Aug. 29, 2022, available from the internet URL: https://www.amazon.com/dp/B09HT8JT7C/ (Year: 2021).*
(Continued)

Primary Examiner — Messina L Smith
Assistant Examiner — Jillian Mazzola
(74) *Attorney, Agent, or Firm* — True Shepherd, LLC; Andrew Cheng

(57) **CLAIM**

The ornamental design for a backpack, as shown and described.

DESCRIPTION

FIG. **1** is a front, left, and top perspective view of a backpack, showing my design.
FIG. **2** is a rear, right and bottom perspective view thereof.
FIG. **3** is a front elevation view thereof.
FIG. **4** is a rear elevation view thereof.
FIG. **5** is a left side elevation view thereof.
FIG. **6** is a right side elevation view thereof.
FIG. **7** is a top plan view thereof; and,
FIG. **8** is a bottom plan view thereof.
The broken lines shown in the drawings depict portions of the backpack that form no part of the claimed design.

1 Claim, 8 Drawing Sheets

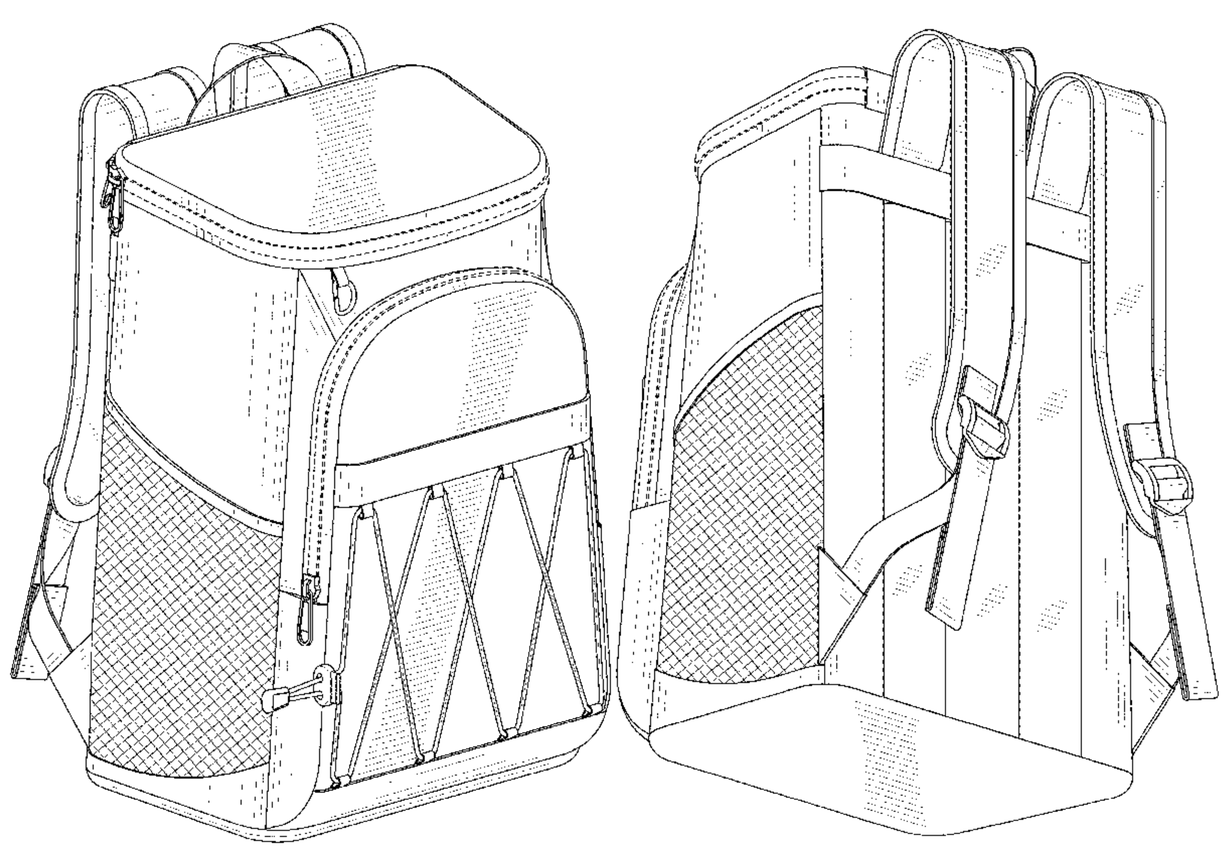

(56) **References Cited**

U.S. PATENT DOCUMENTS

D871,163	S	*	12/2019	Jacobsen	D3/216
D925,907	S		7/2021	Baires et al.	
D927,173	S		8/2021	Kawamoto et al.	
D946,885	S	*	3/2022	Bi	D3/217
2003/0164321	A1	*	9/2003	Ukitsu	A45F 3/04 190/102
2018/0252458	A1	*	9/2018	Furneaux	A45F 4/02

FOREIGN PATENT DOCUMENTS

GB	6109355	*	12/2020
RU	00120289	*	6/2020

OTHER PUBLICATIONS

Sougayilang Cooler Backpack, available at amazon.com, earliest date available Sep. 7, 2020 [online], site visited Aug. 29, 2022, available from the internet URL: https://www.amazon.com/dp/B08HHZ46S1/ (Year: 2020).*

Maelstrom Cooler Backpack, available at amazon.com, earliest date available Dec. 28, 2021 [online], site visited Aug. 29, 2022, available from the internet URL: https://www.amazon.com/Maelstrom-Backpack-Leakproof-Insulated-Shopping/dp/B09P9T17RR/ (Year: 2021).*

EVERFUN Cooler Backpack, available at amazon.com, earliest date available Feb. 26, 2022 [online], site visited Aug. 29, 2022, available from the internet URL: https://www.amazon.com/dp/B09PHDDMC3/ (Year: 2022).*

* cited by examiner

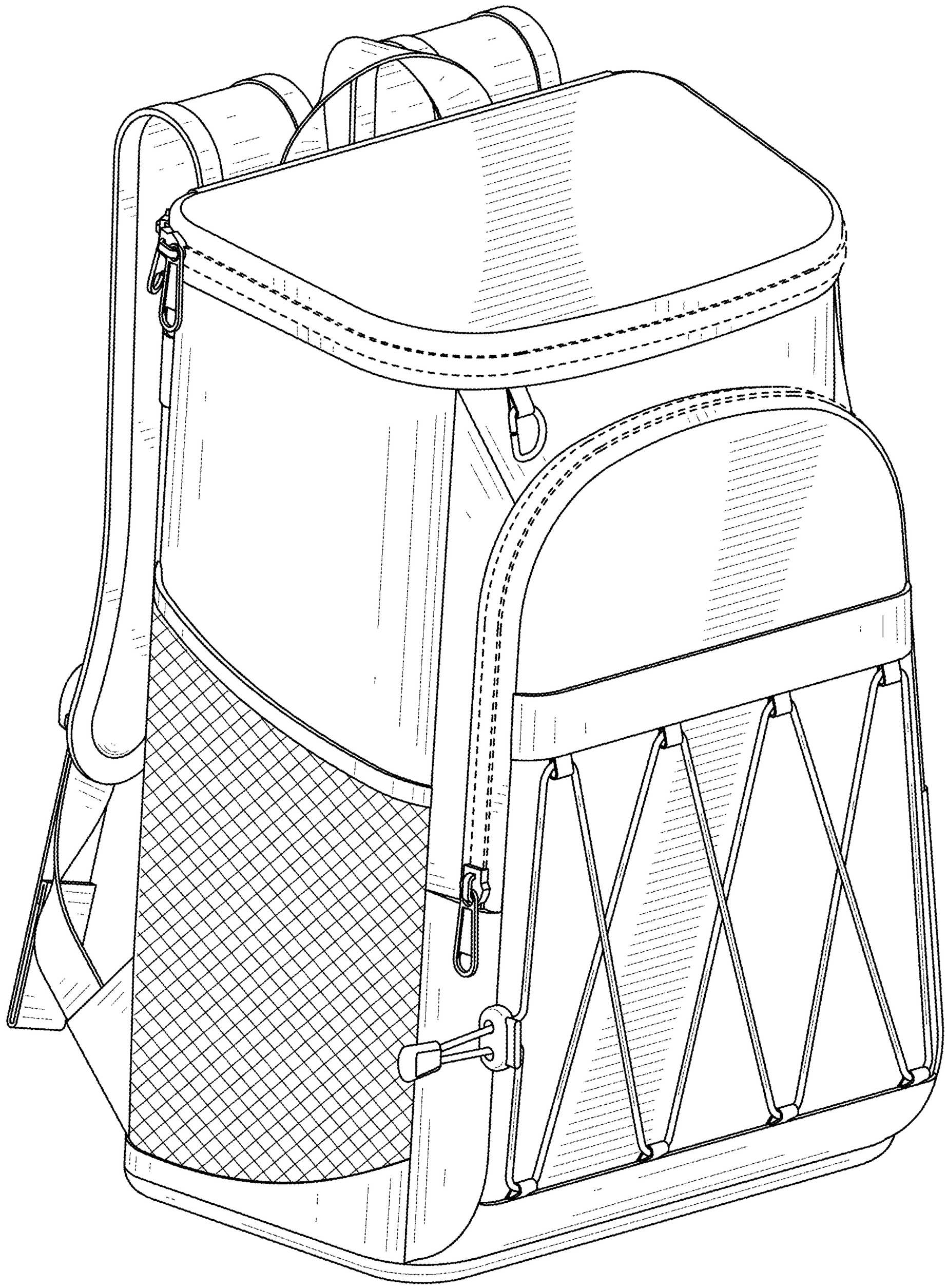

FIG. 1

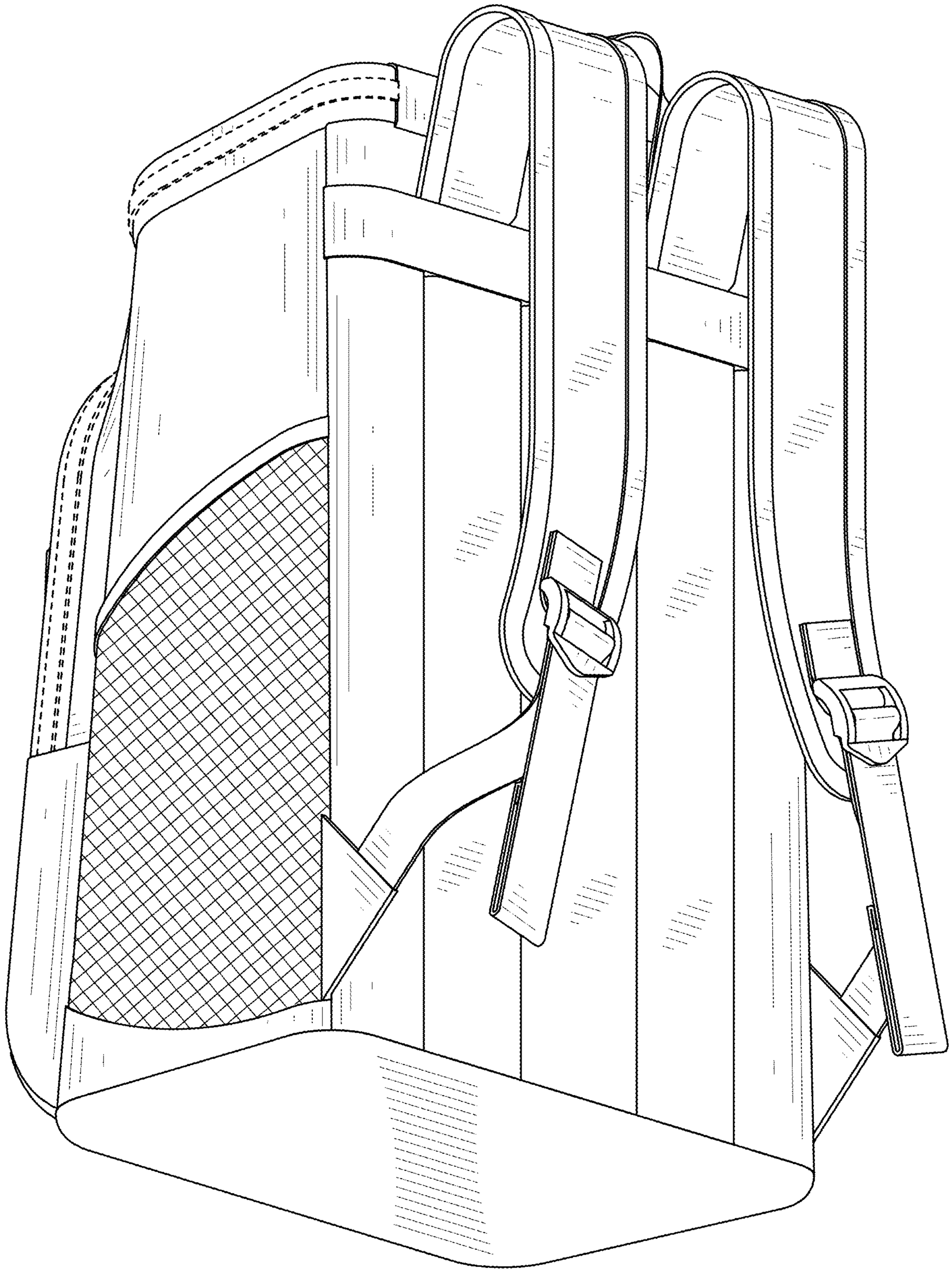

FIG. 2

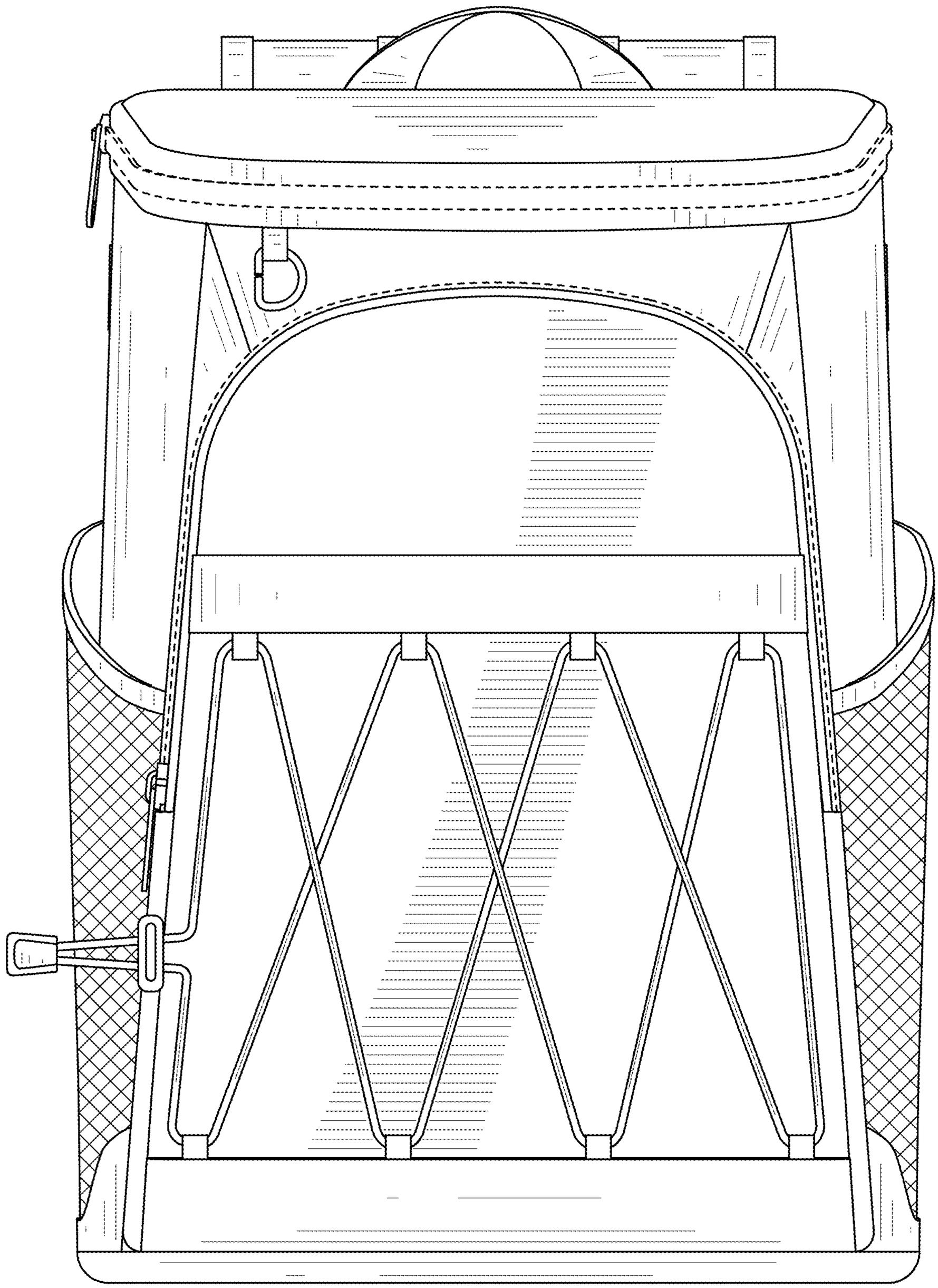

FIG. 3

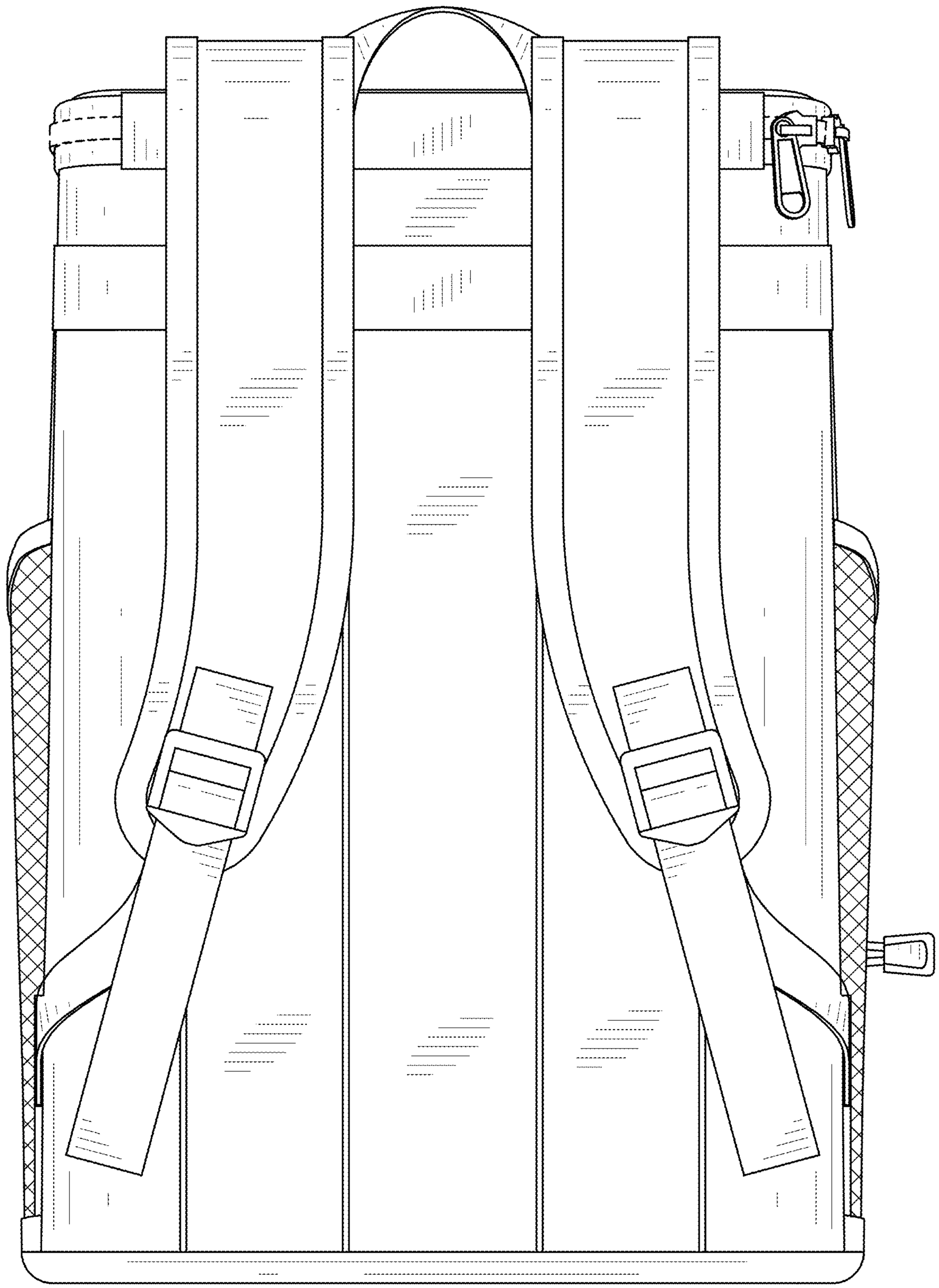

FIG. 4

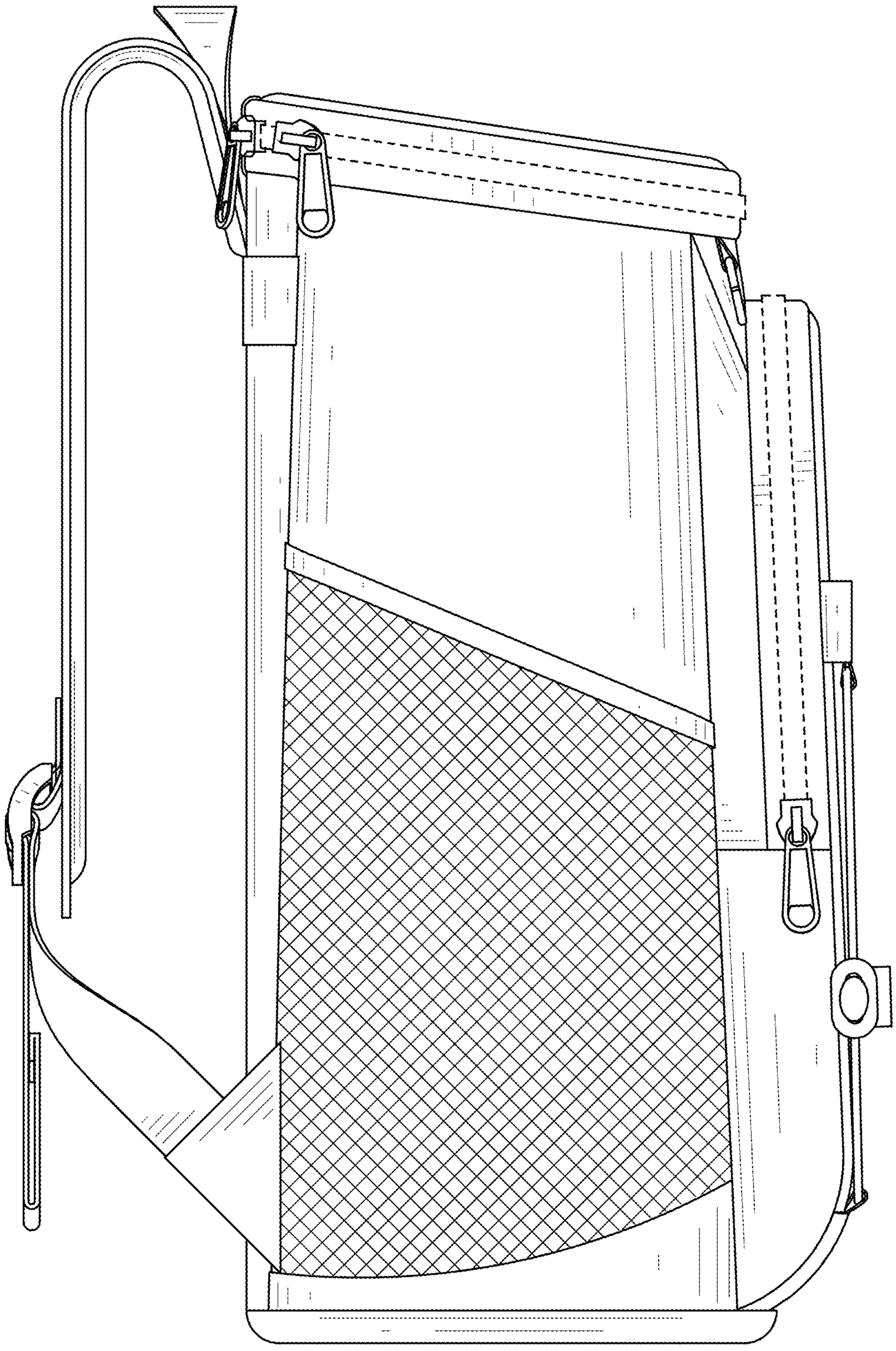

FIG. 5

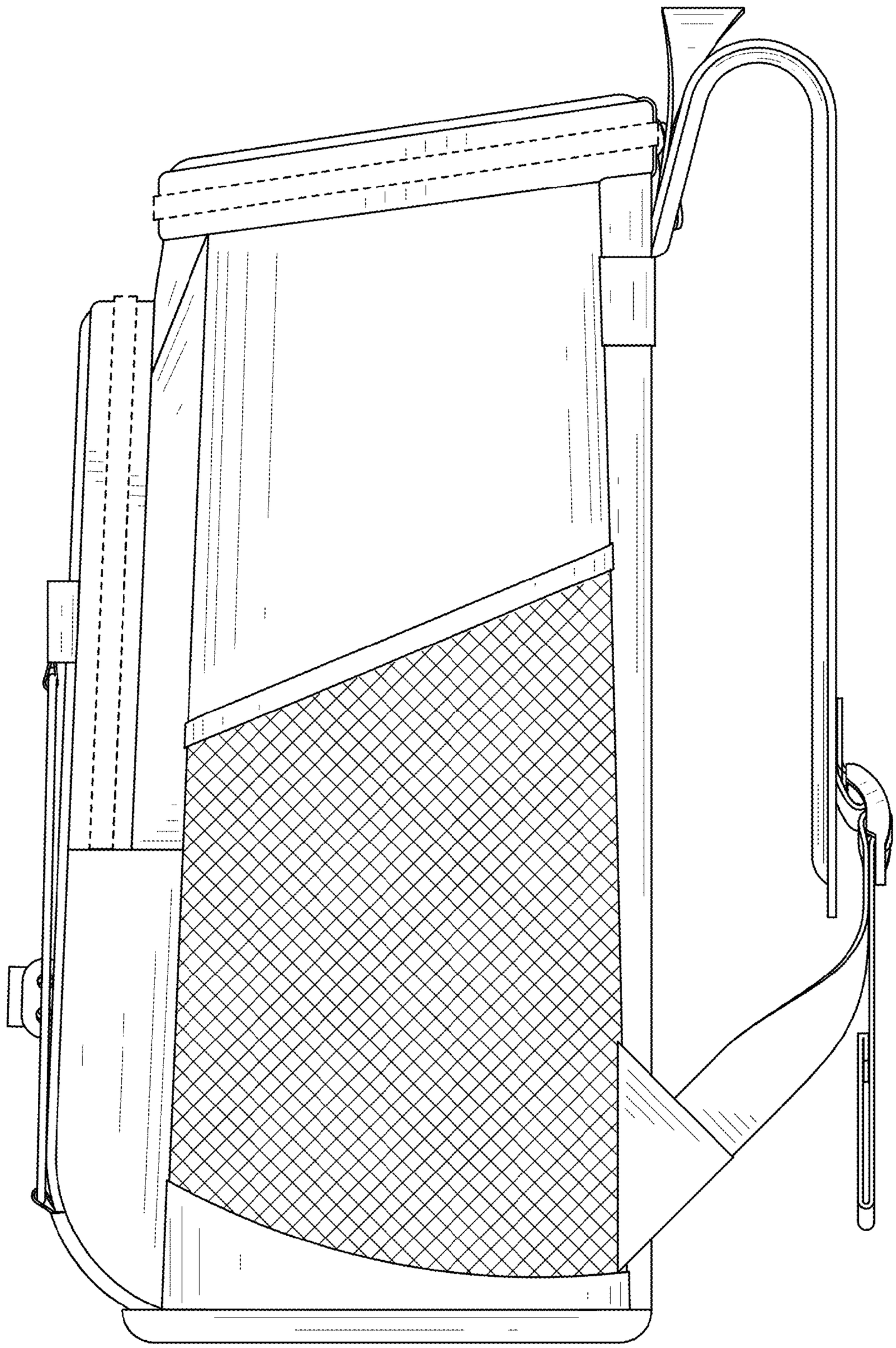

FIG. 6

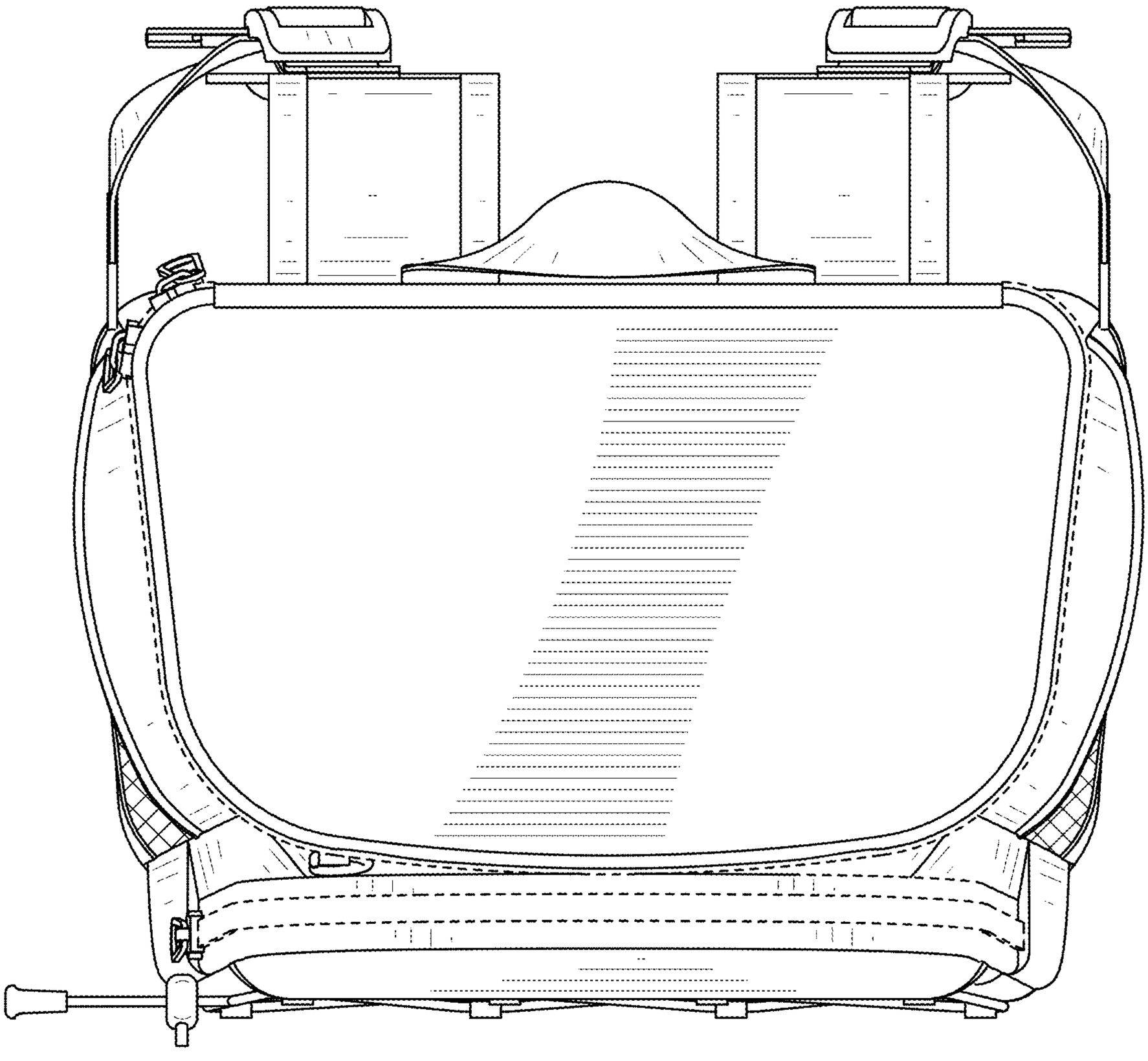

FIG. 7

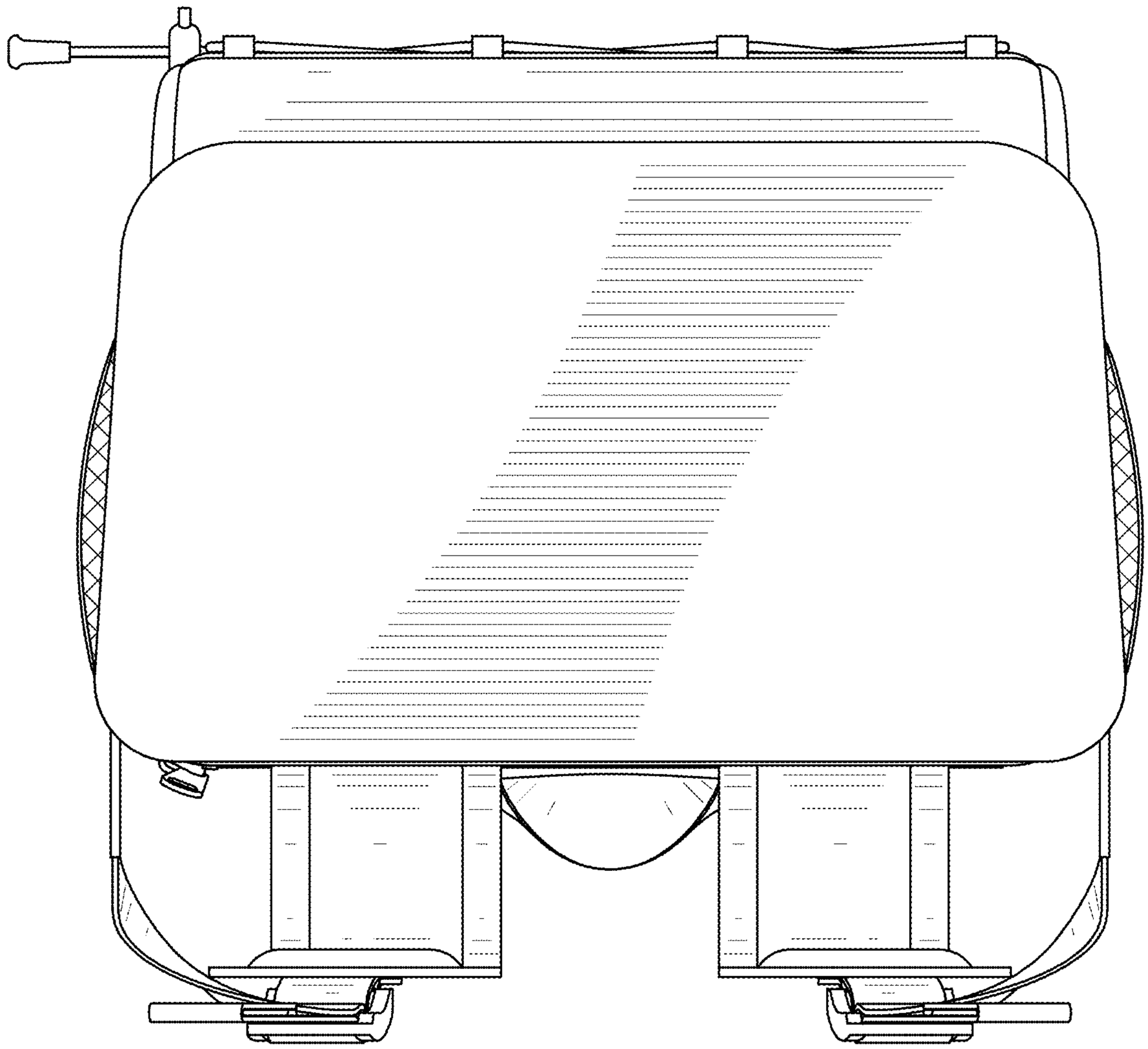

FIG. 8