US00D967023S

(12) United States Design Patent

Nishimura et al.

(10) Patent No.: US D967,023 S
(45) Date of Patent: ** Oct. 18, 2022

(54) **WIRELESS POWER TRANSFER DEVICE**

(71) Applicant: **IHI Corporation**, Tokyo (JP)

(72) Inventors: **Kenji Nishimura**, Tokyo (JP); **Seishiro Nakajima**, Tokyo (JP); **Tatsuya Matsui**, Tokyo (JP)

(73) Assignee: **IHI CORPORATION**, Tokyo (JP)

(**) Term: **15 Years**

(21) Appl. No.: **29/692,052**

(22) Filed: **May 22, 2019**

(30) **Foreign Application Priority Data**

Mar. 29, 2019 (JP) 2019-006864

(51) **LOC (13) Cl.** **13-02**

(52) **U.S. Cl.**
USPC **D13/110**

(58) **Field of Classification Search**
USPC D13/103, 105–110, 118, 119, 184, 199; D14/230, 234
CPC .. H01Q 1/36; H01Q 1/38; H01Q 7/00; H01Q 9/285; H01Q 13/10; H01Q 19/12; H01Q 19/30; H04B 1/0475; H04B 1/034; H05K 11/00; Y02E 60/10; Y02E 60/12; Y02E 60/122; Y02E 60/124; Y02E 60/50; H01M 2/02; H01M 2/022; H01M 2/0202; H01M 2/0207; H01M 2/0212; H01M 2/1061; H01M 10/44; H01M 10/46; H01M 10/465; H01M 10/482
See application file for complete search history.

(56) **References Cited**

U.S. PATENT DOCUMENTS

D390,432 S * 2/1998 Shaffer D8/29
D449,271 S 10/2001 Tong et al.
(Continued)

OTHER PUBLICATIONS

Applicant's Exhibit 1: Online Press Release for IHI Forum 2018 Exhibition, where Applicant exhibited its Wireless Power Transfer Device (Nov. 14, 2018 to Nov. 17, 2018) (with English concise explanation of relevance provided by English translation of relevant portions of document).

(Continued)

Primary Examiner — Christy Nemeth
(74) *Attorney, Agent, or Firm* — Volpe Koenig

(57) **CLAIM**

The ornamental design for a wireless power transfer device, as shown and described.

DESCRIPTION

FIG. **1** is a perspective view of an wireless power transfer device showing our new design;
FIG. **2** is a front view thereof;
FIG. **3** is a rear view thereof;
FIG. **4** is a top plan view thereof;
FIG. **5** is a bottom view thereof;
FIG. **6** is a right side view thereof;
FIG. **7** is a left side view thereof;
FIG. **8** is an enlarged fragment shown encircled in FIG. **1**;
FIG. **9** is an enlarged fragment shown encircled in FIG. **2**; and,
FIG. **10** is a perspective view of the wireless power transfer device, shown in an environment of use.
The dot-dot broken lines are for the purpose of illustrating environmental subject matter and portions of the article that form no part of the claimed design.
The dot-dash broken lines are for the purpose of illustrating a boundary and form no part of the claimed design.
The dot-dot-dash broken lines in FIGS. **1**, **2**, **8** and **9** depict the limits of the enlarged fragments and form no part of the claimed design.

1 Claim, 10 Drawing Sheets

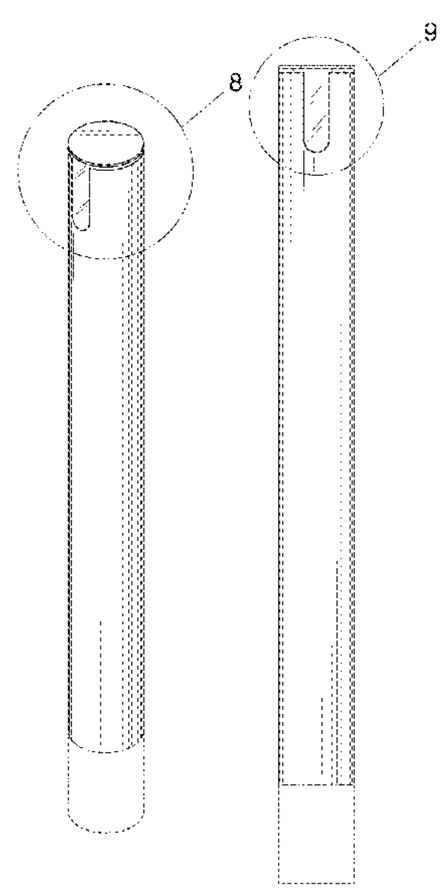

(56) **References Cited**

U.S. PATENT DOCUMENTS

D532,366	S	*	11/2006	Koizumi	D14/155
D532,412	S	*	11/2006	Yang	D14/234
D546,277	S		7/2007	Andre et al.	
D585,435	S	*	1/2009	Wafer	D14/230
D597,937	S	*	8/2009	Haw	D13/107
D606,490	S	*	12/2009	Sasada	D13/102
D624,011	S		9/2010	Bertagnole et al.	
D686,155	S	*	7/2013	Nguyen	D13/103
D690,262	S		9/2013	Huang et al.	
D719,141	S	*	12/2014	Chou	D14/230
D719,505	S		12/2014	Kim et al.	
D729,163	S		5/2015	Meyer	
D743,887	S		11/2015	Dasbach	
D748,079	S	*	1/2016	Dinsdale	D14/230
D751,054	S	*	3/2016	Chou	D14/230
D782,973	S		4/2017	Zhou	
D786,791	S		5/2017	Jeong et al.	
D800,651	S		10/2017	Voller et al.	
D808,939	S	*	1/2018	Tinaphong	D14/230
D809,491	S	*	2/2018	Tinaphong	D14/230
D812,024	S	*	3/2018	Lewis	D13/184
D812,556	S		3/2018	Xu	
D812,595	S	*	3/2018	Kang	D14/230
D813,155	S	*	3/2018	Yamada	D27/101
D835,574	S		12/2018	Trongone	
D845,897	S		4/2019	Kim	
D849,679	S		5/2019	Tian et al.	
D863,270	S	*	10/2019	Naweed	D14/230
D863,271	S	*	10/2019	Zhang	D14/234
D866,458	S		11/2019	Chen et al.	
D871,321	S		12/2019	Chung	
D875,041	S		2/2020	Chen et al.	
D875,042	S		2/2020	Ye	
D875,678	S		2/2020	Kim et al.	
D876,356	S		2/2020	Tanaka	
D881,856	S	*	4/2020	Zhao	D14/230
D884,528	S	*	5/2020	Woeber	D10/102
D884,618	S		5/2020	Vahle et al.	
D887,970	S		6/2020	Himeno	
D893,423	S	*	8/2020	Nishimura	D13/110
D896,753	S	*	9/2020	Alali	D13/110
D897,878	S		10/2020	Lian	
D900,023	S	*	10/2020	Derouineau	D13/107
D901,468	S	*	11/2020	Zhao	D14/230
D902,187	S	*	11/2020	Coleman	D14/230
D918,079	S		5/2021	Scalisi et al.	
D919,605	S	*	5/2021	Chen	D14/230
D920,242	S		5/2021	Lebreux et al.	
D921,511	S		6/2021	Li	
D921,577	S	*	6/2021	Nishimura	D13/103
D923,505	S		6/2021	Scalisi et al.	
D926,066	S		7/2021	England et al.	
D926,067	S		7/2021	Jacob et al.	
D927,338	S		8/2021	Smalley et al.	
D928,005	S		8/2021	Smalley et al.	
D935,337	S		11/2021	Huang	
D937,206	S		11/2021	Romano et al.	
2014/0357094	A1		12/2014	Kim	
2015/0042268	A1		2/2015	Chen et al.	
2016/0352390	A1		12/2016	Park et al.	
2017/0250574	A1		8/2017	Min et al.	
2019/0165610	A1		5/2019	Hong et al.	
2020/0244327	A1	*	7/2020	Bøjer	H01Q 9/40

OTHER PUBLICATIONS

Applicant's Exhibit 2: Official Website for Nikkei Xtrend Expo 2018 Exhibition, where Applicant exhibited its Wireless Power Transfer Device, (Nov. 28, 2018 to Nov. 29, 2018) (with English concise explanation of relevance provided by English translation of relevant portions of document).

Applicant's Exhibit 3: Official Website for "Latest Trends in Electric Vehicle Technology—The Future of Electric Vehicle Technology as Seen by JSAE-" Symposium, where Applicant exhibited its Wireless Power Transfer Device (Jan. 24, 2019) (with English concise explanation of relevance provided by English translation of relevant portions of document).

Applicant's Exhibit 4: Applicant's Website Featuring Applicant's Wireless Power Transfer Device, Available at: https://www.ihi.co.jp/mobility/ev/ (Nov. 27, 2018).

Ring Smart Lighting Low Voltage Lighting Transformer. 2020. Best Buy. https://www.bestbuy.com/site/ring-smart-lighting-low-voltage-lighting-transformer-12-15v-200w-black-ring-bridge-required-black/6350267.p?skuId=6350267&ref= 212&loc=1&gclid=EAIalQobChMI1Mjinn9TS9AIVSuKzCh1dAAOsEAQYDiABEgJE4PDBwE&gclsrc=aw.ds.

Ring Video Doorbell. 2020, Wasserstein Home. https://wasserstein-home.com/products/16v-30va-doorbell-transfornner-power-supply-connpatible-with-ring-video-doorbell-1-doorbell-2-doorbell-pro-and-nest-hello-doorbell.

Video Doorbell Power Supply. Before Dec. 9, 2020. Home Depot. https://www.homedepot.com/p/Video-Doorbell-Power-Supply-Connpatible-with-Nest-Hello-No-Existing-Wiring-Required-Black-db-nes-001/315554974.

Wireless Power Supply. (Design—© Questel) orbit.com. [Online PDF compilation of references] 74 pgs. Print Dates Range May 18, 2021-Apr. 17, 2019. [Retrieved Dec. 7, 2021].

* cited by examiner

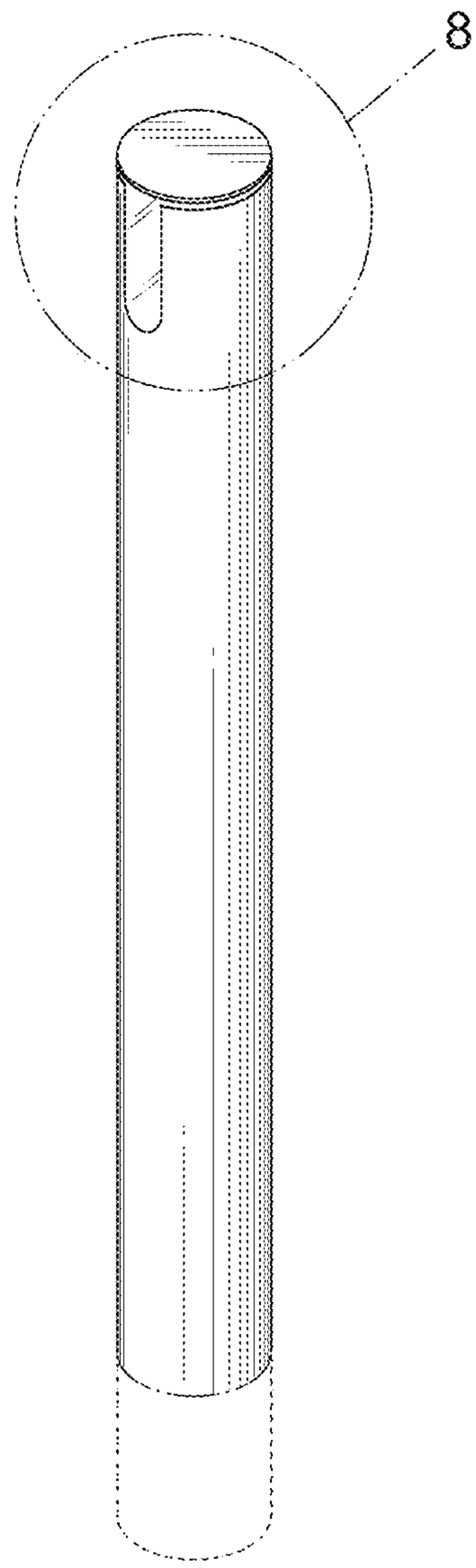

FIG. 1

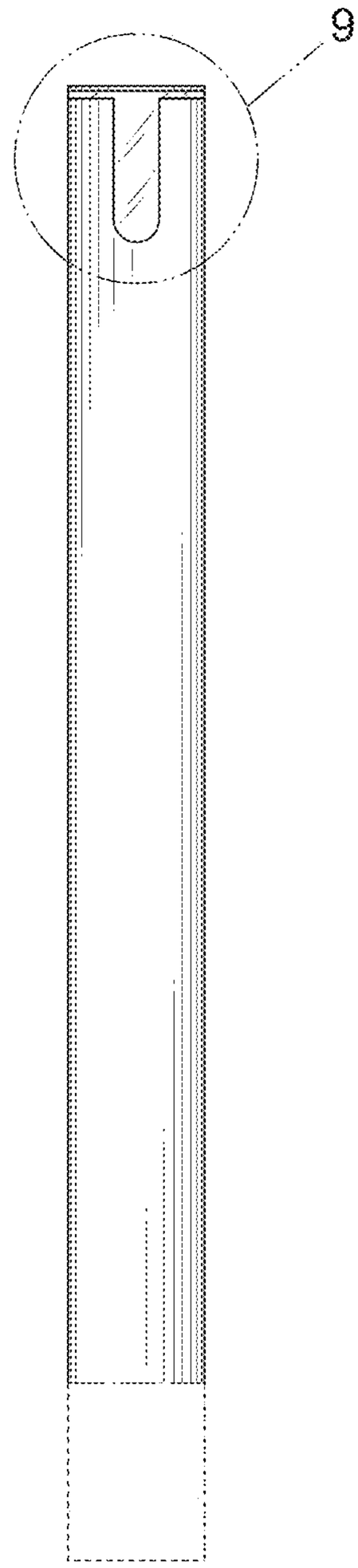

FIG. 2

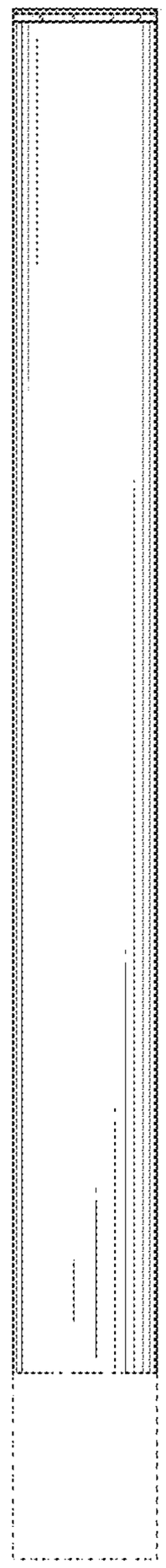

FIG. 3

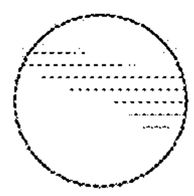

FIG. 4

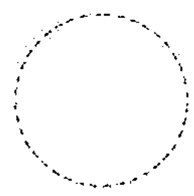

FIG. 5

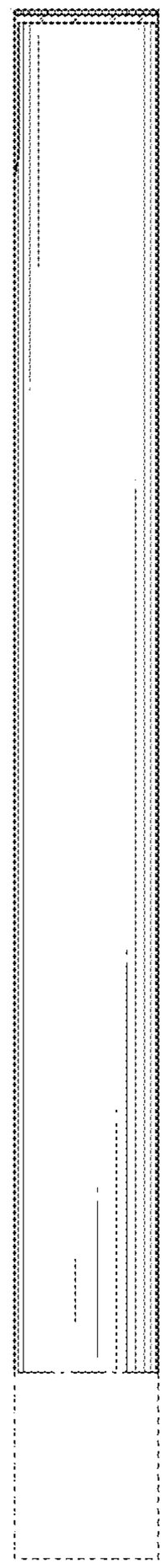

FIG. 6

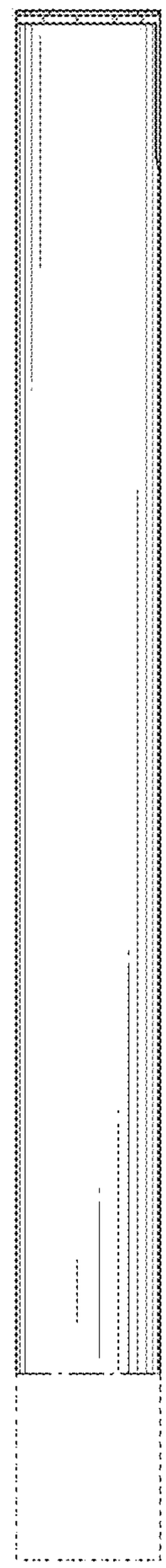

FIG. 7

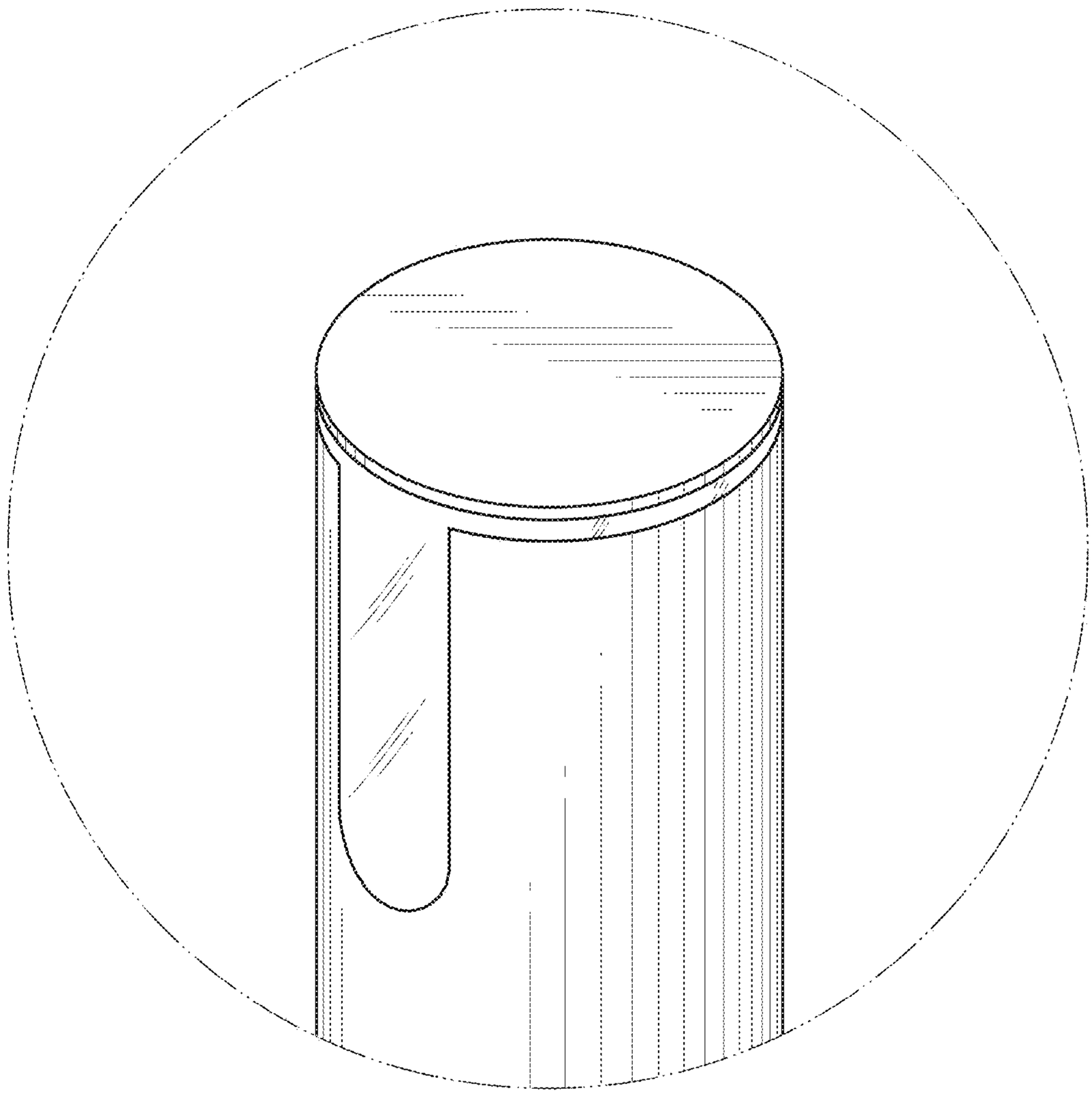

FIG. 8

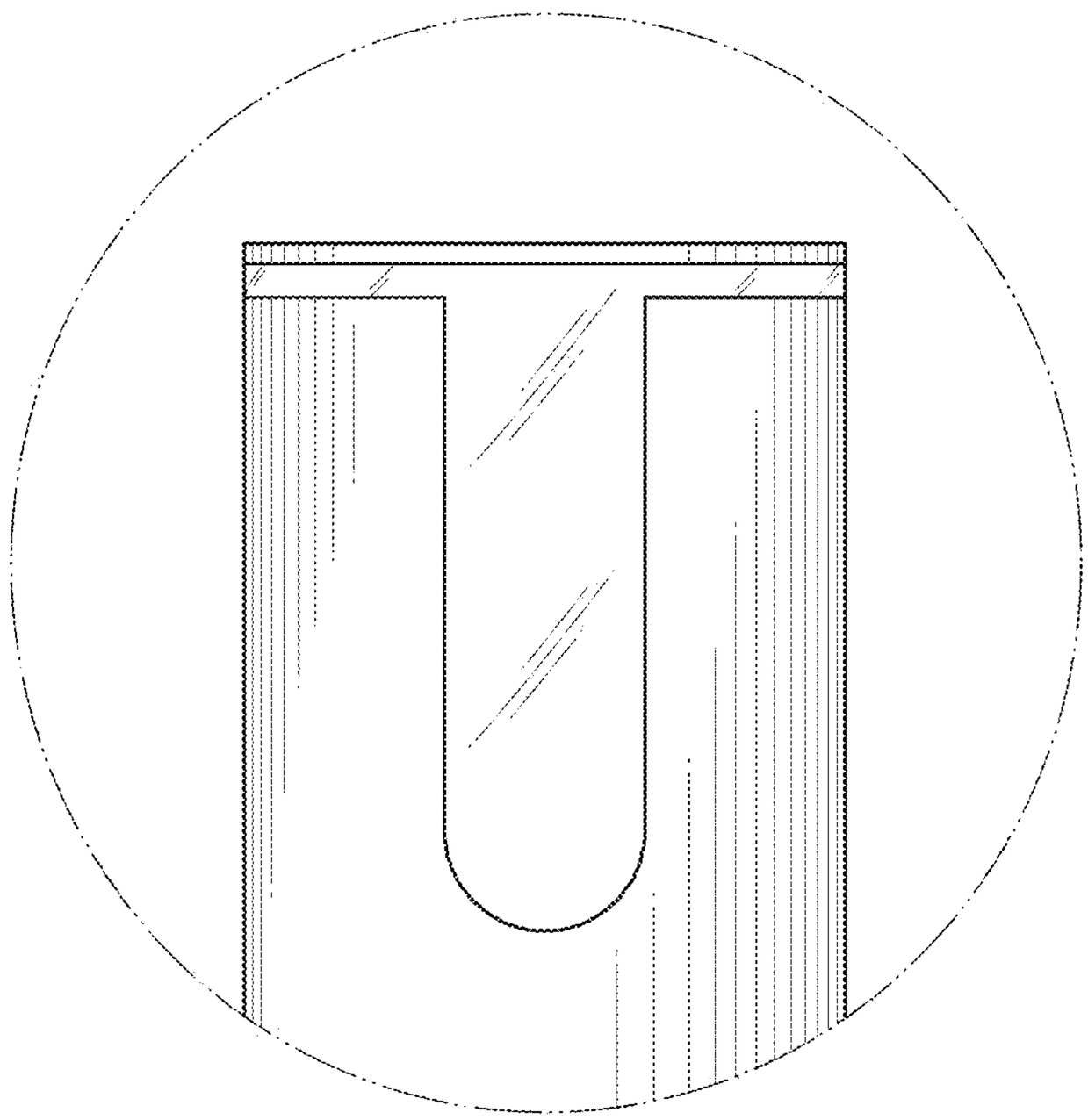

FIG. 9

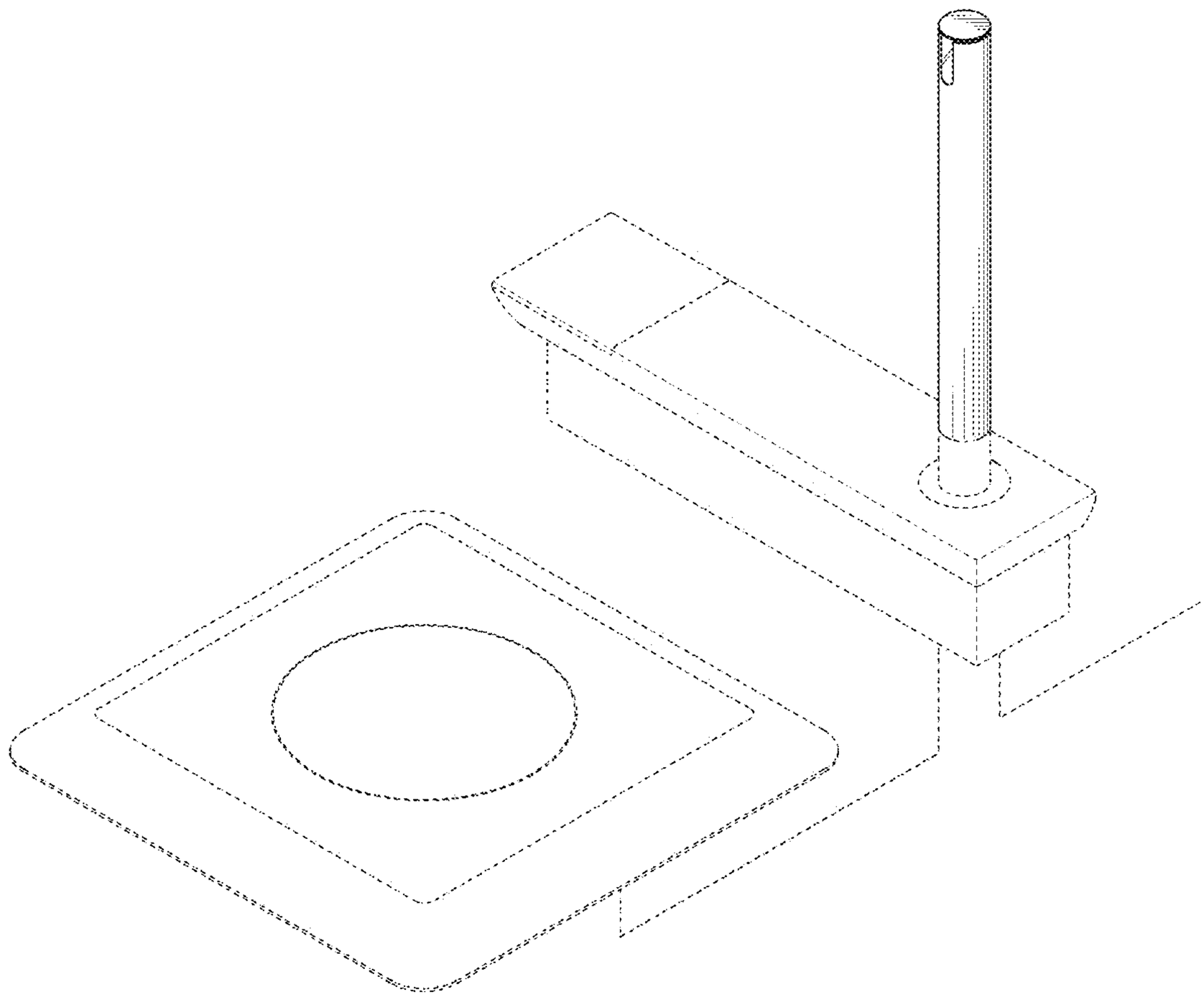

FIG. 10