US00D966716S

(12) United States Design Patent

Chen

(10) Patent No.: US D966,716 S
(45) Date of Patent: ** Oct. 18, 2022

(54) **ELECTRIC TOOTHBRUSH SET**

(71) Applicant: **SHENZHEN E-BEST CREATION THECHONOLGY CO., LTD.**, Shenzhen (CN)

(72) Inventor: **Ke Chen**, Shenzhen (CN)

(73) Assignee: **SHENZHEN E-BEST CREATION THECHONOLGY CO., LTD.**, Shenzhen (CN)

(**) Term: **15 Years**

(21) Appl. No.: **29/775,307**

(22) Filed: **Mar. 23, 2021**

(51) **LOC (13) Cl.** **04-02**

(52) **U.S. Cl.**
USPC **D4/101**

(58) **Field of Classification Search**
USPC D4/100, 101, 102, 103, 104, 107, 109, D4/110, 111, 113, 127, 128, 129
CPC A46B 2200/1066; A46B 2200/1073; A46B 9/04; A46B 13/023; A46B 5/0095; A61C 17/16; A61C 17/222
See application file for complete search history.

(56) **References Cited**

U.S. PATENT DOCUMENTS

D767,896	S	*	10/2016	Shigeno	D4/101
D780,456	S	*	3/2017	Shigeno	D4/101
D922,075	S	*	6/2021	Yuan	D4/101
D933,961	S	*	10/2021	He	D4/101
D948,219	S	*	4/2022	Tian	D4/101
2011/0005015	A1	*	1/2011	Iwahori	A61C 17/3481 15/22.1
2011/0047729	A1	*	3/2011	Iwahori	A61C 17/3481 15/22.1

(Continued)

FOREIGN PATENT DOCUMENTS

CN	307331393	*	5/2022

Primary Examiner — Cynthia Ramirez
Assistant Examiner — Tamara L Hahn

(57) **CLAIM**

The ornamental design for an electric toothbrush set, as shown and described.

DESCRIPTION

FIG. **1** is a perspective view of a toothbrush of the electric toothbrush set showing my new design, shown separately to show aspects of the design that are not visible when combined.
FIG. **2** is another perspective view thereof;
FIG. **3** is a front elevational view thereof;
FIG. **4** is a rear elevational view thereof;
FIG. **5** is a left side elevational view thereof;
FIG. **6** is a right side elevational view thereof;
FIG. **7** is a top plan view thereof;
FIG. **8** is a bottom plan view thereof;
FIG. **9** is a perspective view of a toothbrush case of the electric toothbrush set showing my new design, shown separately to show aspects of the design that are not visible when combined.
FIG. **10** is a front elevational view thereof;
FIG. **11** is a rear elevational view thereof;
FIG. **12** is a left side elevational view thereof;
FIG. **13** is a right side elevational view thereof;
FIG. **14** is a top plan view thereof;
FIG. **15** is a bottom plan view thereof;
FIG. **16** is a perspective view of the electric toothbrush set, shown in use with the toothbrush received in the toothbrush case; and,
FIG. **17** is an exploded perspective view of the toothbrush case of the electric toothbrush set.
The broken lines in the drawings depict portions of the electric toothbrush set that form no part of the claimed design.

1 Claim, 17 Drawing Sheets

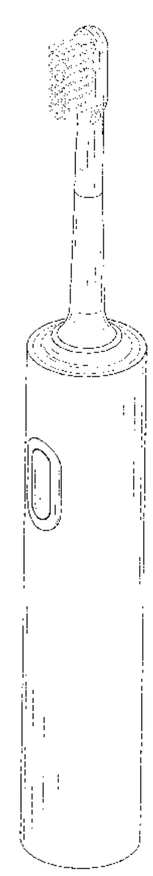

(56) **References Cited**

U.S. PATENT DOCUMENTS

2017/0216004 A1* 8/2017 Okai A46B 17/04
2018/0014923 A1* 1/2018 Hata A61C 17/222

* cited by examiner

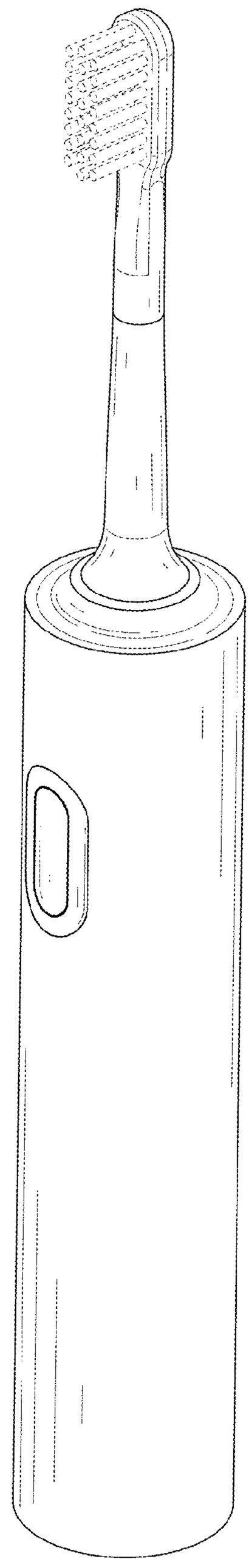

FIG. 1

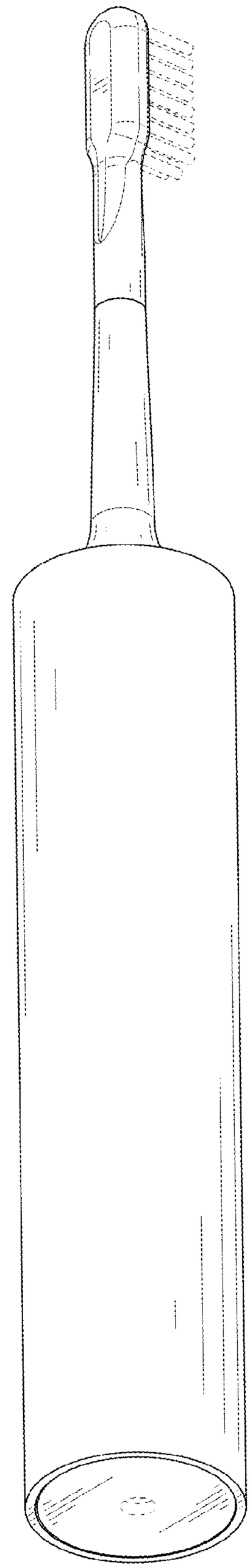

FIG. 2

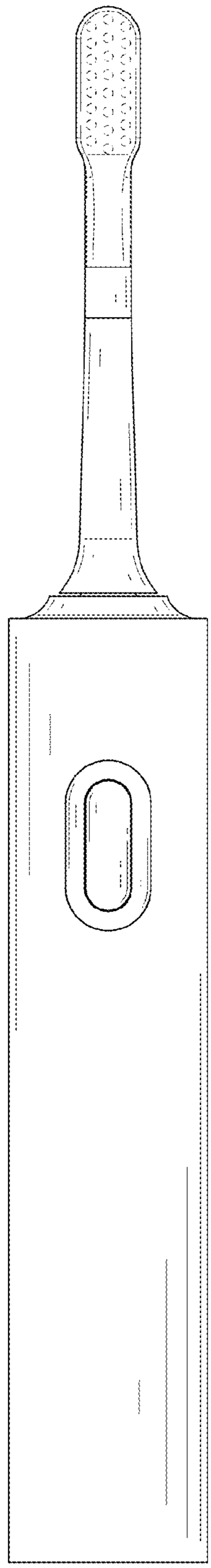

FIG. 3

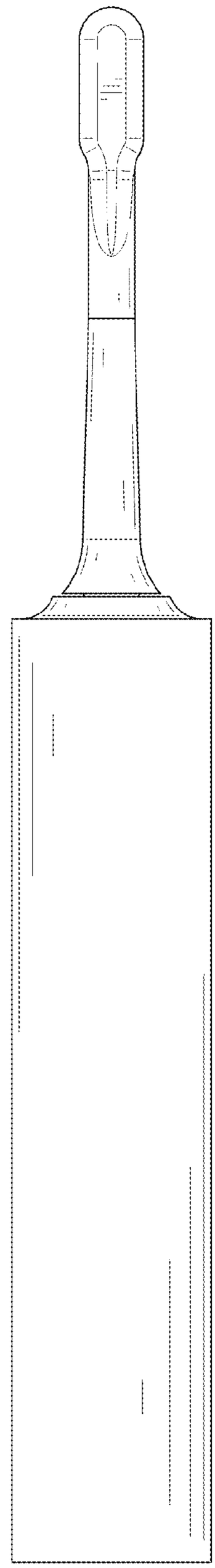

FIG. 4

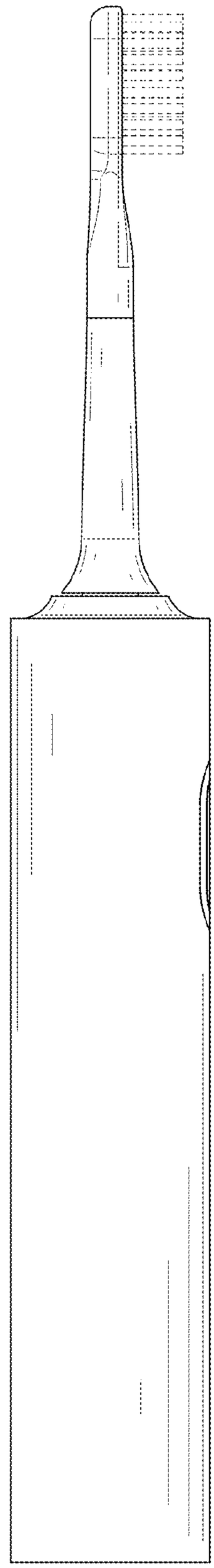

FIG. 5

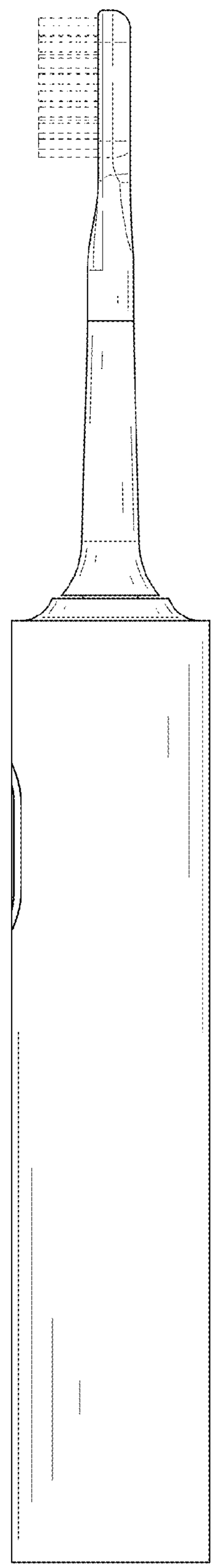

FIG. 6

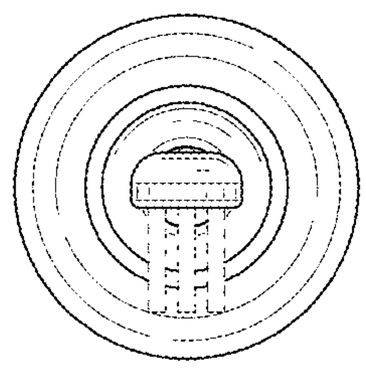

FIG. 7

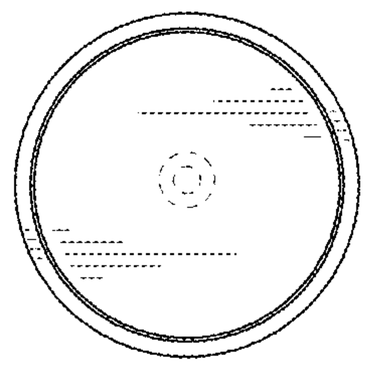

FIG. 8

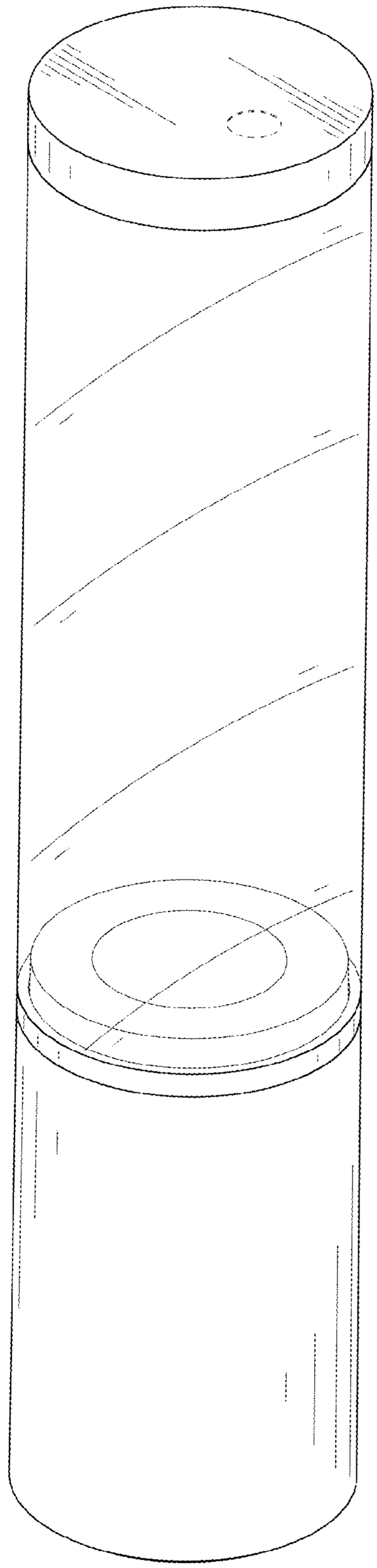

FIG. 9

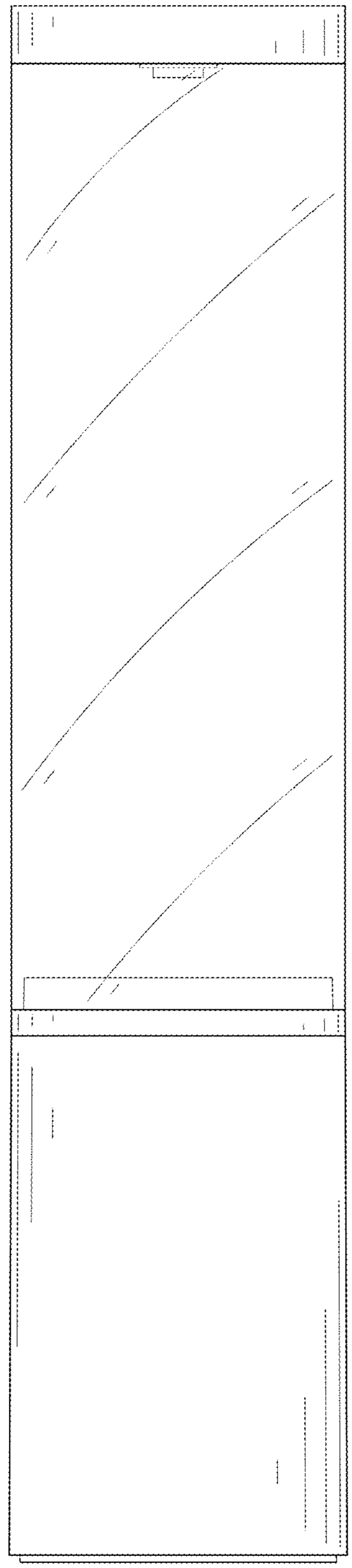

FIG. 10

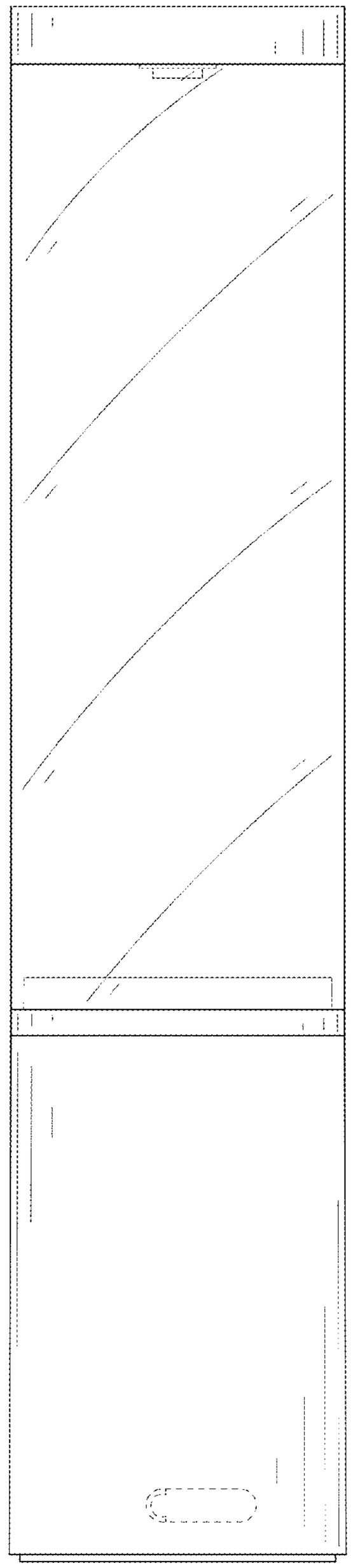

FIG. 11

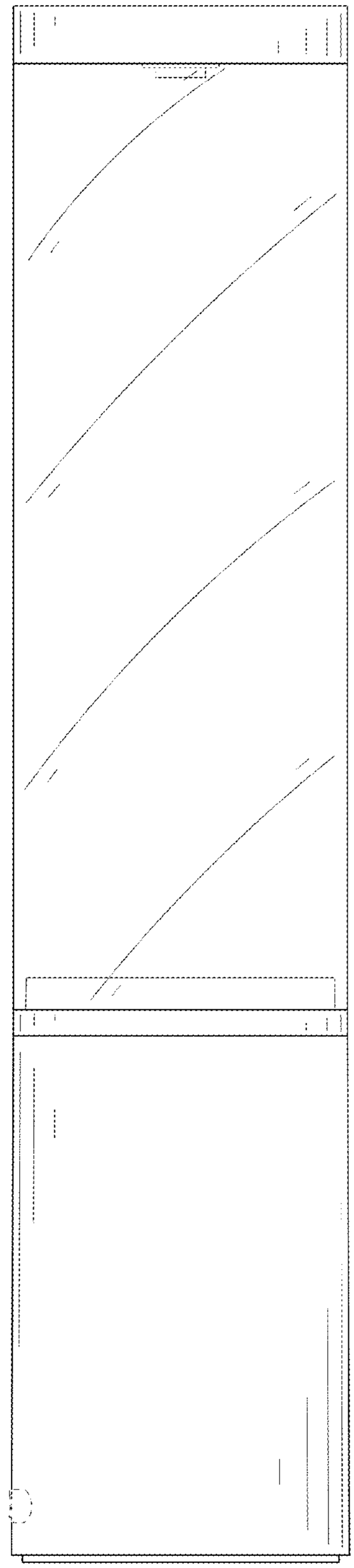

FIG. 12

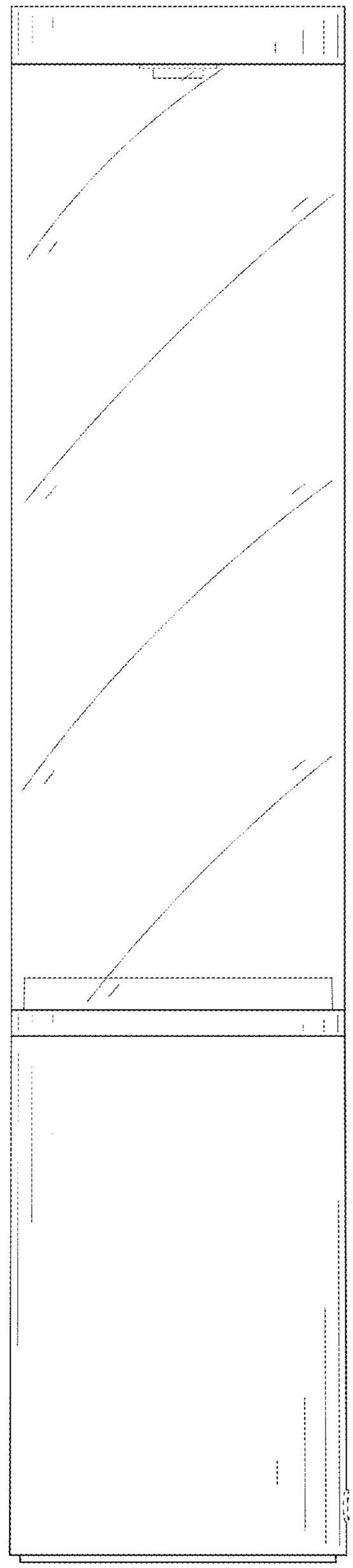

FIG. 13

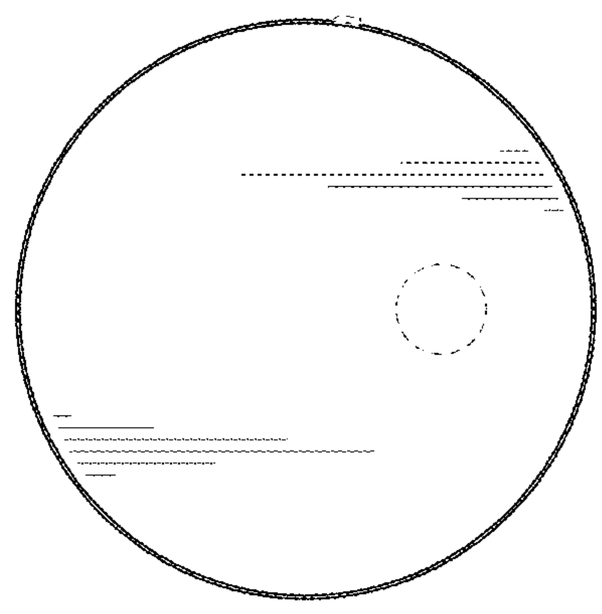

FIG. 14

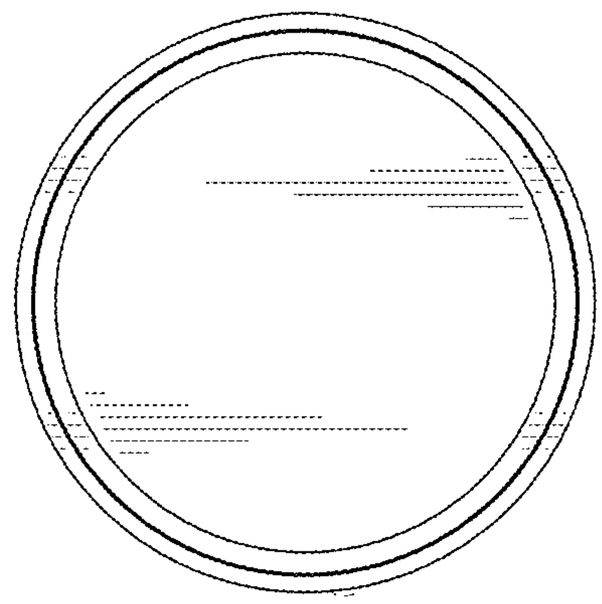

FIG. 15

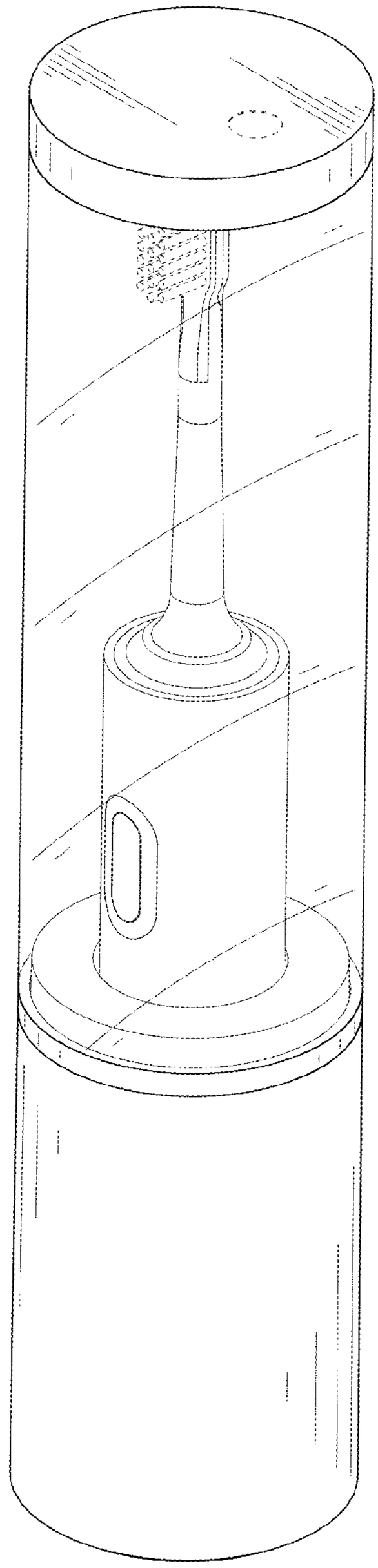

FIG. 16

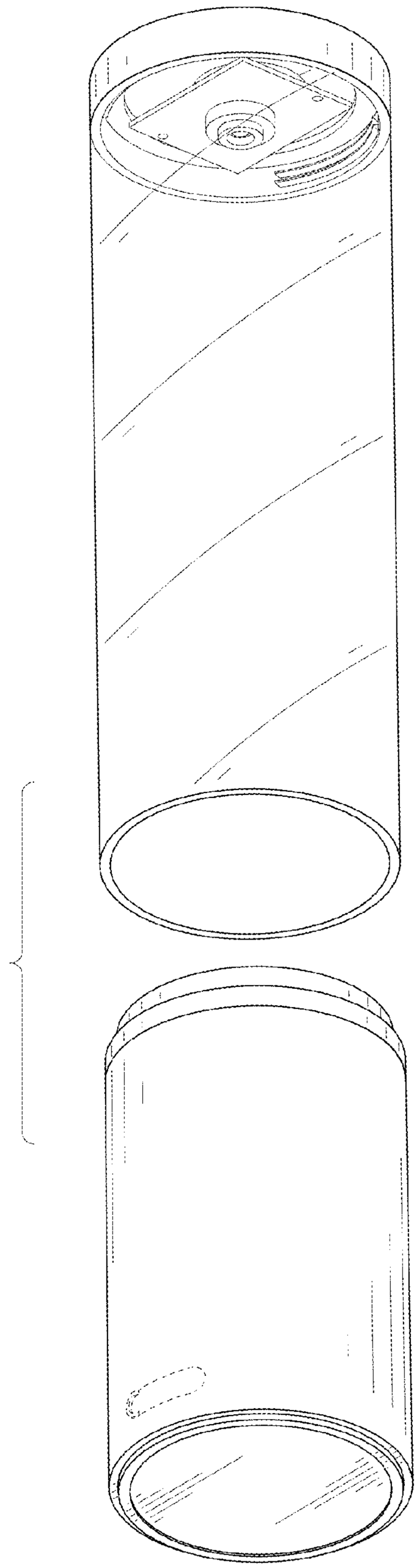

FIG. 17