US00D966460S

(12) United States Design Patent

Ellis et al.

(10) Patent No.: US D966,460 S
(45) Date of Patent: ** *Oct. 11, 2022

(54) **FILTER CAP**

(71) Applicant: **Scientific Plastic Products, Inc.**, Oceanside, CA (US)

(72) Inventors: **Samuel A. Ellis**, Oceanside, CA (US); **Kishan Hingorani**, Oceanside, CA (US); **Michael Tverdoch**, Oceanside, CA (US)

(73) Assignee: **Scientific Plastic Products, Inc.**, Oceanside, CA (US)

(*) Notice: This patent is subject to a terminal disclaimer.

(**) Term: **15 Years**

(21) Appl. No.: **29/715,921**

(22) Filed: **Dec. 5, 2019**

Related U.S. Application Data

(63) Continuation of application No. 29/590,423, filed on Jan. 10, 2017, now abandoned.

(51) **LOC (13) Cl.** **23-01**

(52) **U.S. Cl.**
USPC **D23/209**; D23/365

(58) **Field of Classification Search**
USPC D23/205–210, 314, 325, 333–336, D23/355–366, 386–388
CPC F02M 35/04; F02M 35/10; F02M 35/024; B01D 46/0002; B01D 46/10
See application file for complete search history.

(56) **References Cited**

U.S. PATENT DOCUMENTS

4,900,342 A * 2/1990 Spengler B01D 46/10 415/119
5,061,381 A 10/1991 Burd
D394,697 S * 5/1998 Liang D23/209
D398,046 S * 9/1998 Gillingham B01D 46/527 D23/365
5,972,059 A * 10/1999 Morgan B01D 46/002 55/336
D425,270 S 5/2000 Zahuranec
D441,067 S * 4/2001 Flor D23/365
6,605,216 B1 8/2003 Lederman
D545,955 S * 7/2007 Arias D23/365
7,709,251 B2 * 5/2010 Ellis C12M 23/38 435/305.1
8,580,560 B1 11/2013 Ellis et al.
(Continued)

OTHER PUBLICATIONS

Design Patent Application for Filter Cap, Design U.S. Appl. No. 29/590,423, filed Jan. 10, 2017, Applicant Scientific Plastic Products, Inc.

Primary Examiner — John A Voytek
(74) *Attorney, Agent, or Firm* — Stetina Brunda Garred and Brucker

(57) **CLAIM**

The ornamental design for a filter cap, as shown and described.

DESCRIPTION

FIG. **1** is a top perspective view of a filter cap showing our new design;
FIG. **2** is a bottom perspective view of the filter cap of FIG. **1**;
FIG. **3** is a top plan view of the filter cap of FIG. **1**;
FIG. **4** is a side view of the filter cap of FIG. **1** with the opposing back view being a mirror image thereof;
FIG. **5** is a left side view of the filter cap of FIG. **1**, with the opposing right side view being a mirror image thereof; and,
FIG. **6** is a bottom plan view of the filter cap of FIG. **1**.
The broken lines in FIGS. **1-6** of the drawings are for the purpose of illustrating portions of the filter cap, which form no part of the claimed design.

1 Claim, 5 Drawing Sheets

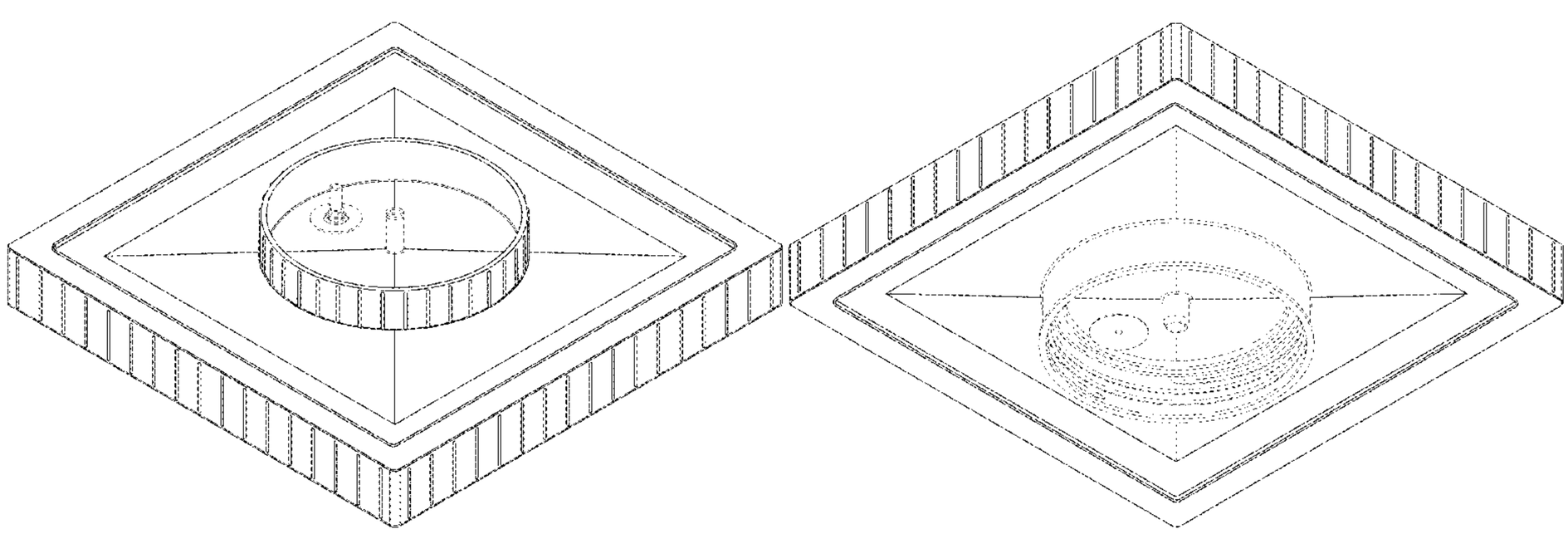

(56) **References Cited**

U.S. PATENT DOCUMENTS

D751,686	S	*	3/2016	Harris	D23/386
D752,195	S		3/2016	Choi	
D770,026	S	*	10/2016	Morgan	B01D 46/2411 D23/365
D773,629	S	*	12/2016	Crisa'	D23/372
9,540,632	B2	*	1/2017	Leland	C12N 1/02
D785,678	S		5/2017	Aoki	
D802,024	S		11/2017	Aoki	
D926,919	S	*	8/2021	McNeil	D23/209

* cited by examiner

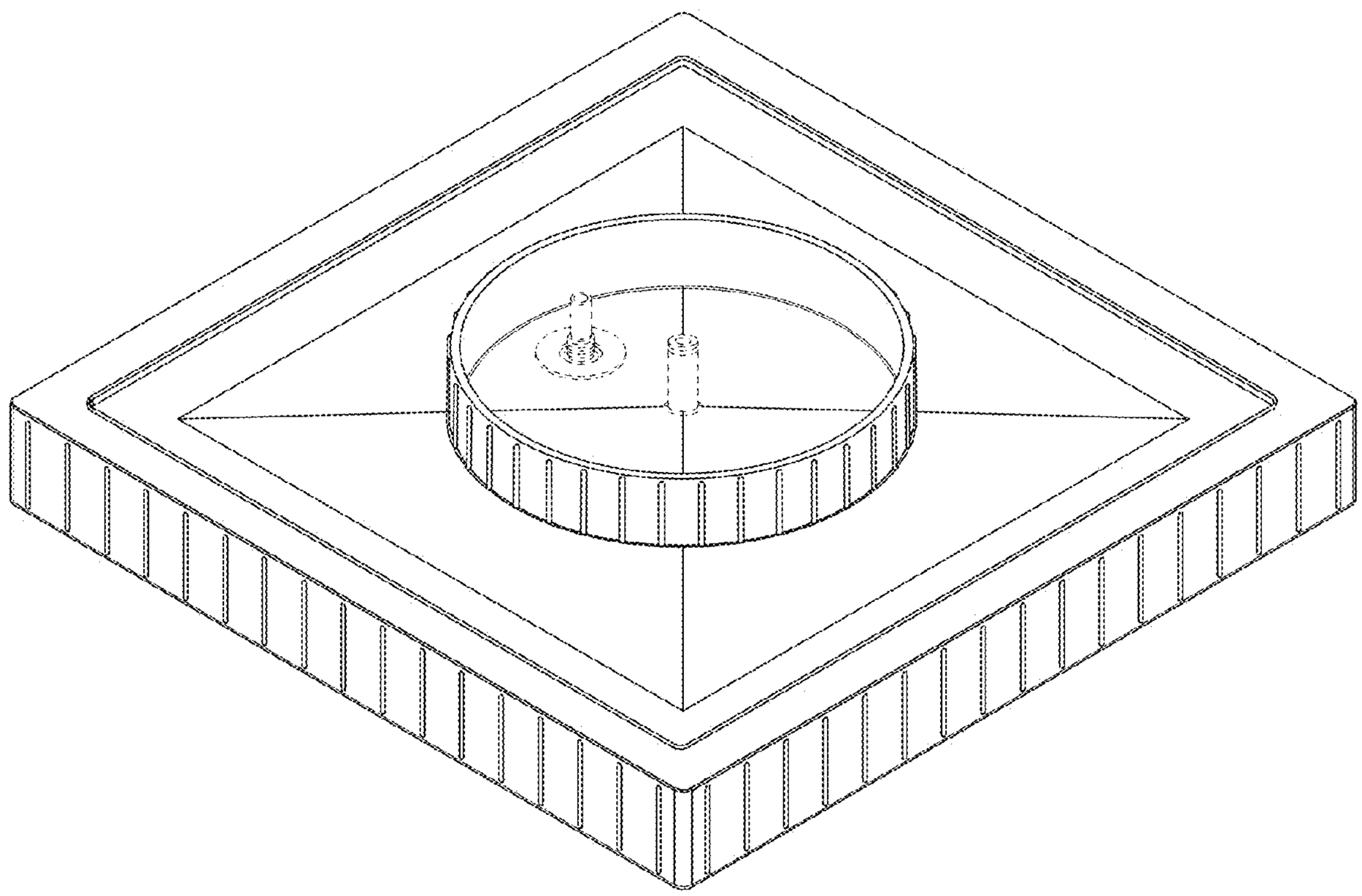

Fig. 1

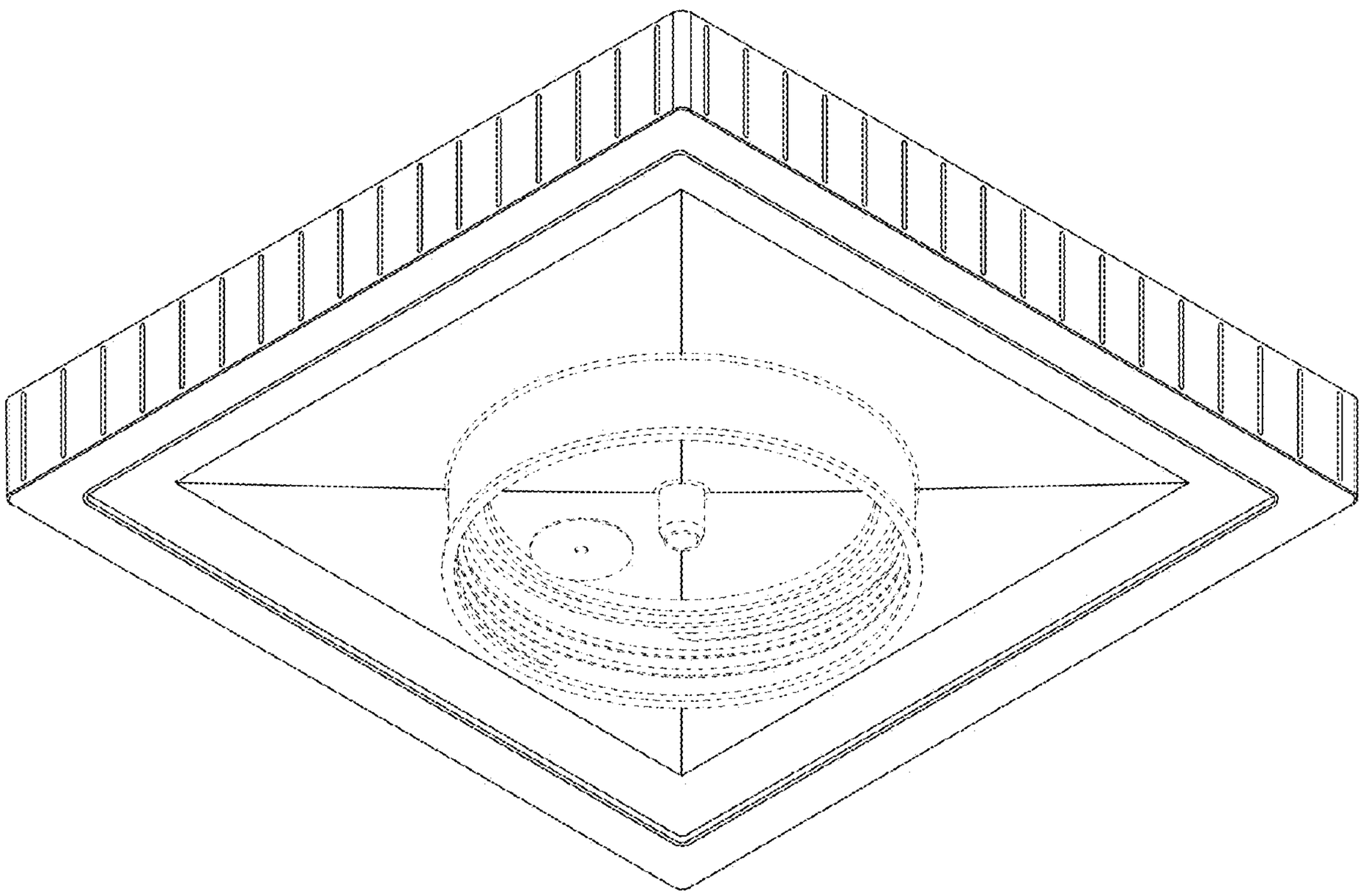

Fig. 2

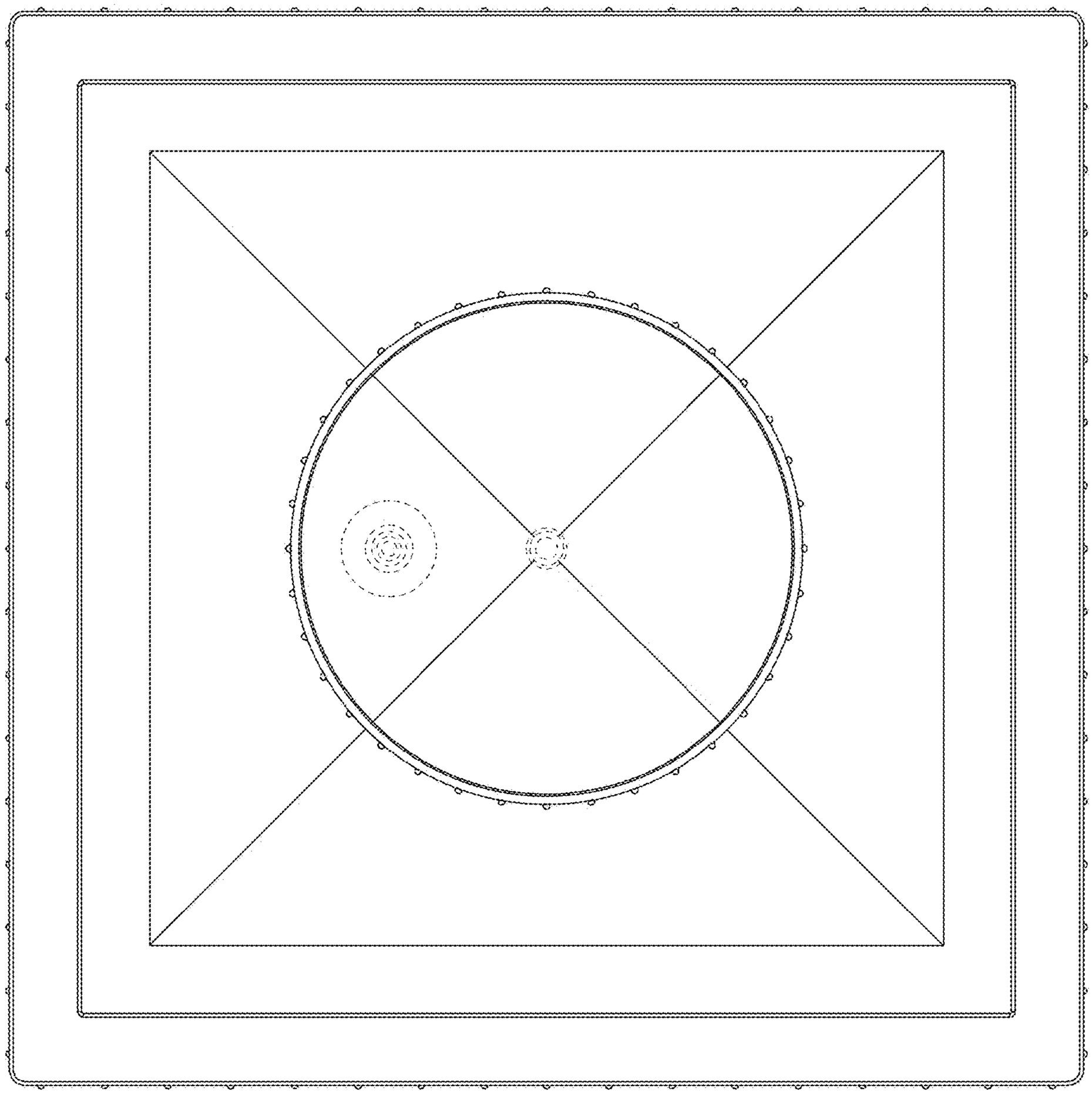

Fig. 3

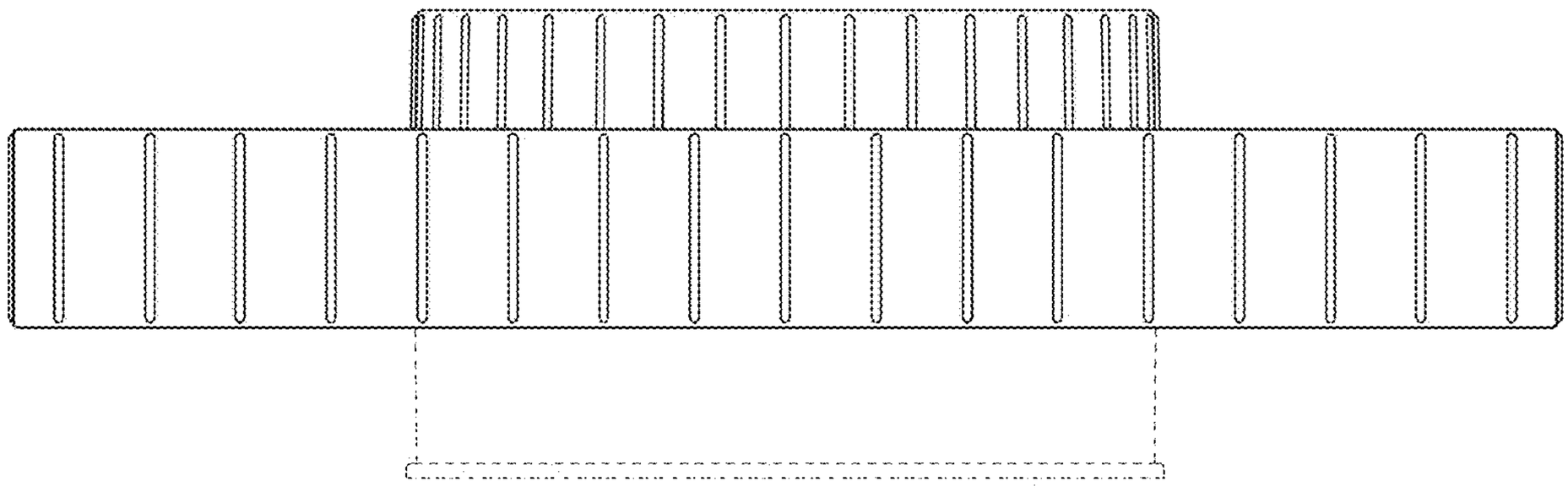

Fig. 4

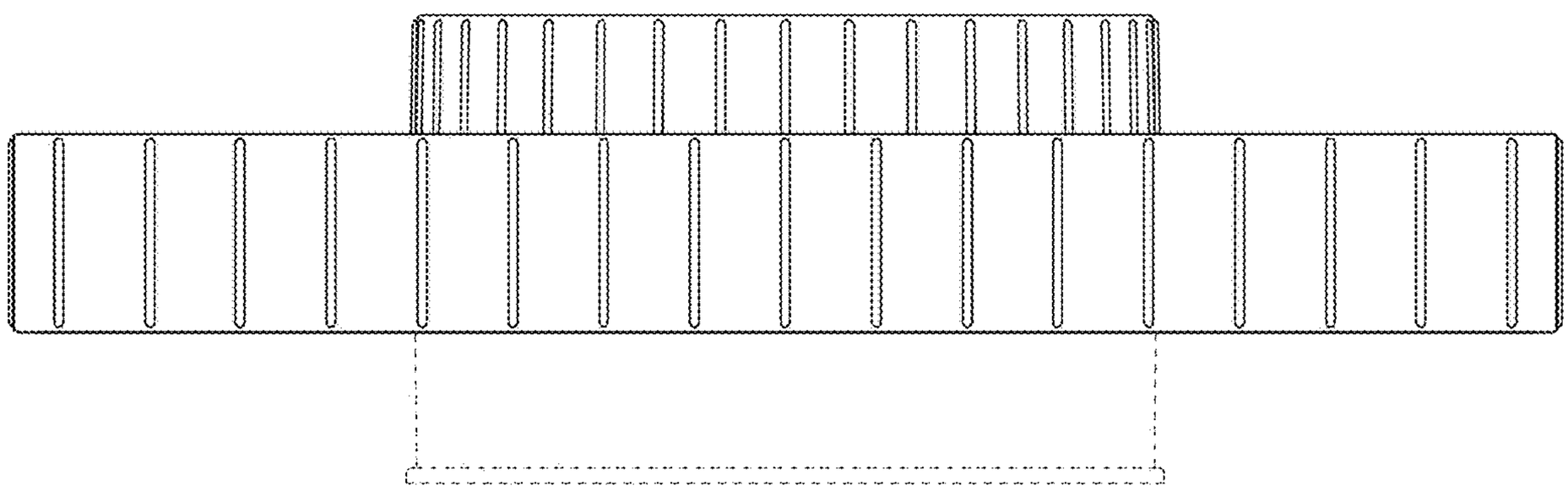

Fig. 5

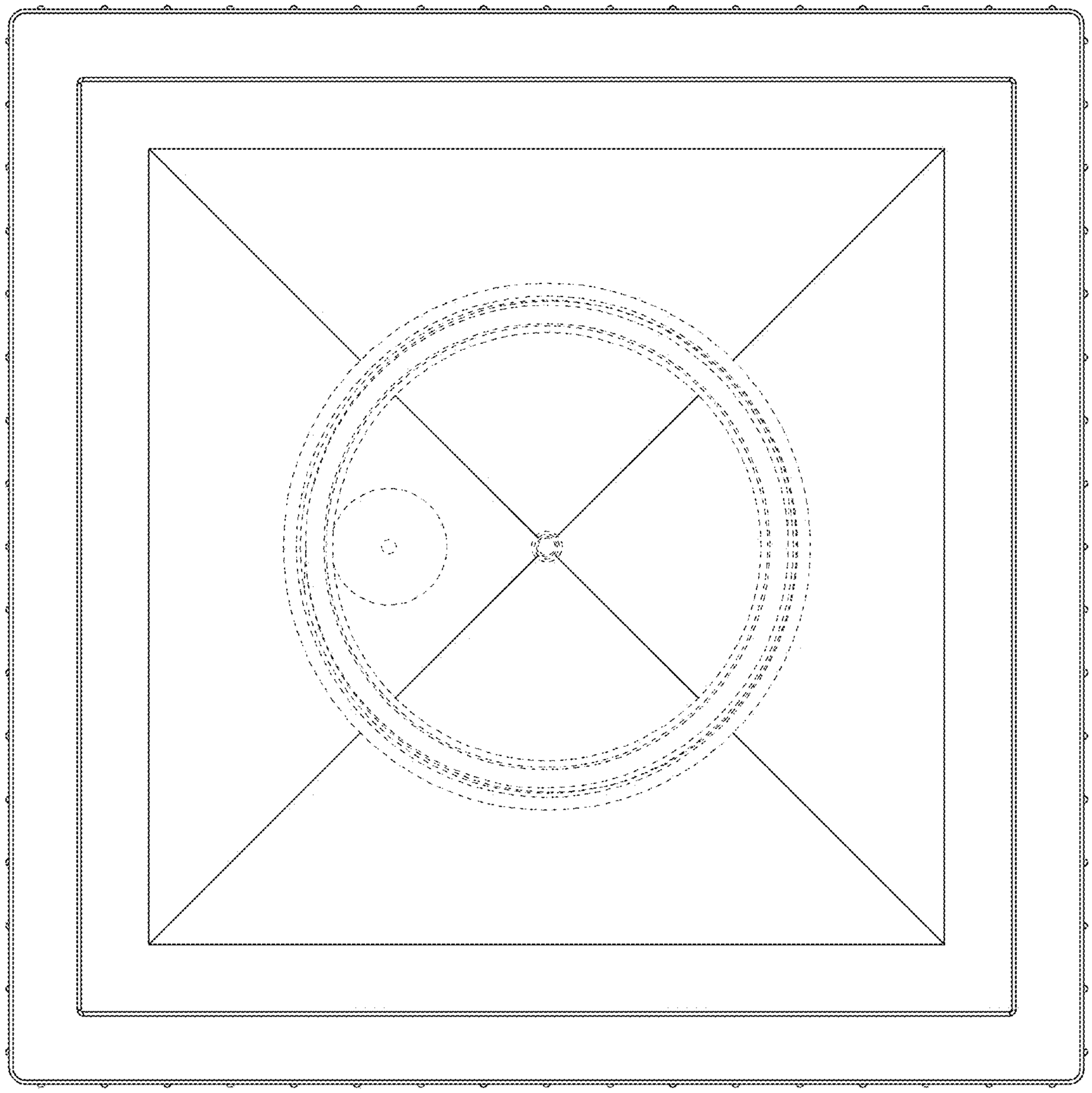

Fig. 6