US00D965724S

(12) United States Design Patent

Pederson

(10) Patent No.: US D965,724 S
(45) Date of Patent: ** Oct. 4, 2022

(54) **TRIGGER GUARD FOR A FIREARM**

(71) Applicant: **Shadow Systems LLC**, Plano, TX (US)

(72) Inventor: **Richard Pederson**, Plano, TX (US)

(73) Assignee: **Shadow Systems LLC**, Plano, TX (US)

(**) Term: **15 Years**

(21) Appl. No.: **29/725,543**

(22) Filed: **Feb. 26, 2020**

(51) **LOC (13) Cl.** **22-01**

(52) **U.S. Cl.**
USPC **D22/108**

(58) **Field of Classification Search**
USPC D22/103, 104, 105, 108; D21/573–575
CPC .. F41A 9/18; F41A 19/11; F41A 17/54; F41C 3/04; F41C 3/08; F41C 3/16; F41C 7/00; F41C 7/06
See application file for complete search history.

(56) **References Cited**

U.S. PATENT DOCUMENTS

D503,207	S	*	3/2005	Salva	D22/104
D596,693	S	*	7/2009	Nakayama	D22/108
D599,430	S	*	9/2009	Siddle	D22/108
D627,415	S	*	11/2010	Finn	D22/108
D638,901	S	*	5/2011	Wright	D22/108
D663,799	S	*	7/2012	Edelman	D22/104
D676,094	S	*	2/2013	Hu	D22/108
D681,131	S	*	4/2013	Su	D21/574
D690,374	S	*	9/2013	Lee	D21/574
D702,310	S	*	4/2014	Larson	D22/108
D702,801	S	*	4/2014	Larson	D22/108
D722,358	S	*	2/2015	Keller	D22/108
D755,907	S	*	5/2016	Hu	D21/574
D786,385	S	*	5/2017	Sapio	D22/108
D828,881	S	*	9/2018	Lee	D21/574
D828,893	S	*	9/2018	Adolfson	D22/108
D830,480	S	*	10/2018	Chu	D21/574
D838,802	S	*	1/2019	Oglesby	D22/108
D839,971	S	*	2/2019	Chu	D21/574
2020/0056853	A1	*	2/2020	Singh	F41A 19/12
2020/0217604	A1	*	7/2020	Borges	F41C 23/10

OTHER PUBLICATIONS

Castiglione, Alexander. "Shadow System Releases New Compact Multi-Role Pistol—The MR920" Posted: Jan. 20, 2020 [visited: Dec. 27, 2021] Recoil URL: https://www.recoilweb.com/shadow-system-releases-new-compact-multi-role-pistol-the-mr920-156693.html (Year: 2020).*

(Continued)

Primary Examiner — Michael A. Pratt
(74) *Attorney, Agent, or Firm* — Kim IP Law Group LLC

(57) **CLAIM**

The ornamental design for a trigger guard for a firearm, as shown and described.

DESCRIPTION

FIG. **1** is a bottom-side perspective view of a trigger guard for a firearm in accordance with the new design;
FIG. **2** is a left side view of the trigger guard for a firearm of FIG. **1**;
FIG. **3** is a right side view of the trigger guard for a firearm of FIG. **1**;
FIG. **4** is a front view of the trigger guard for a firearm of FIG. **1**; and,
FIG. **5** is a bottom view of the trigger guard for a firearm of FIG. **1**.
The even length broken lines in the figures are directed to portions of a firearm that form no part of the claimed design. The dot-dashed lines show unclaimed boundaries of the trigger guard for a firearm and form no part of the claimed design.

1 Claim, 5 Drawing Sheets

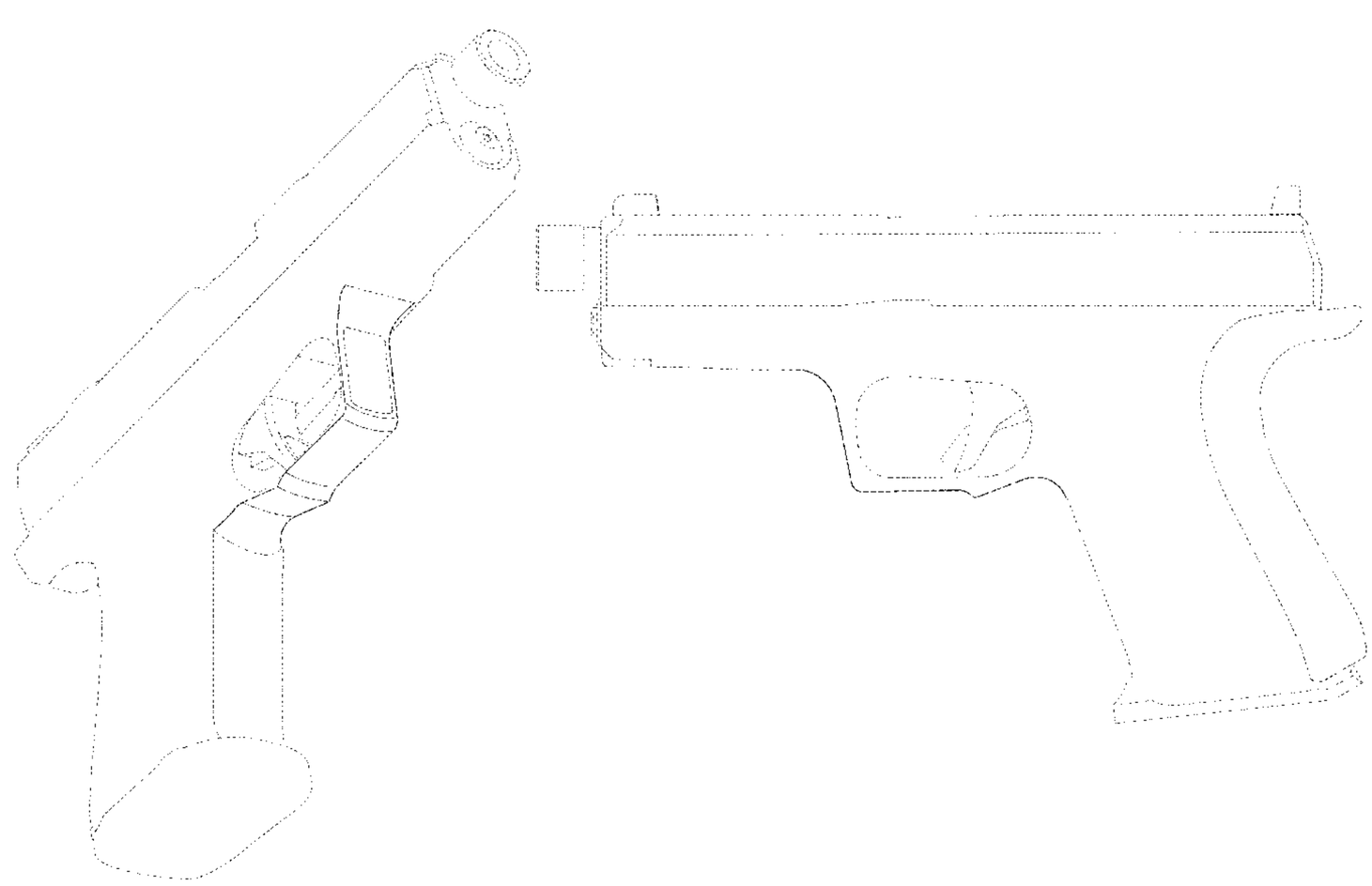

(56) **References Cited**

OTHER PUBLICATIONS

Cox, Matthew. "A Truly Shootable Tactical Pistol: Shadow Systems Shows Off Its New Take." Posted: Jan. 22, 2020 [visited: Dec. 27, 2021] Military.com URL: https://www.military.com/daily-news/2020/01/22/truly-shootable-tactical-pistol-shadow-systems-shows-its-new-take.html (Year: 2020).*

Billings, Jacki. "Shadow Systems Releases New MR920 Pistol" Posted: Jan. 28, 2020 [visited: Dec. 20, 2021] Guns URL: https://www.guns.com/news/2020/01/28/shadow-systems-releases-new-mr920-pistol (Year: 2020).*

GLD1980. "Shadow Systems MR920" Posted: Feb. 12, 2020 [visited: Dec. 27, 2021] Glock Talk URL: https://www.glocktalk.com/threads/shadow-systems-mr920.1810698/ (Year: 2020).*

* cited by examiner

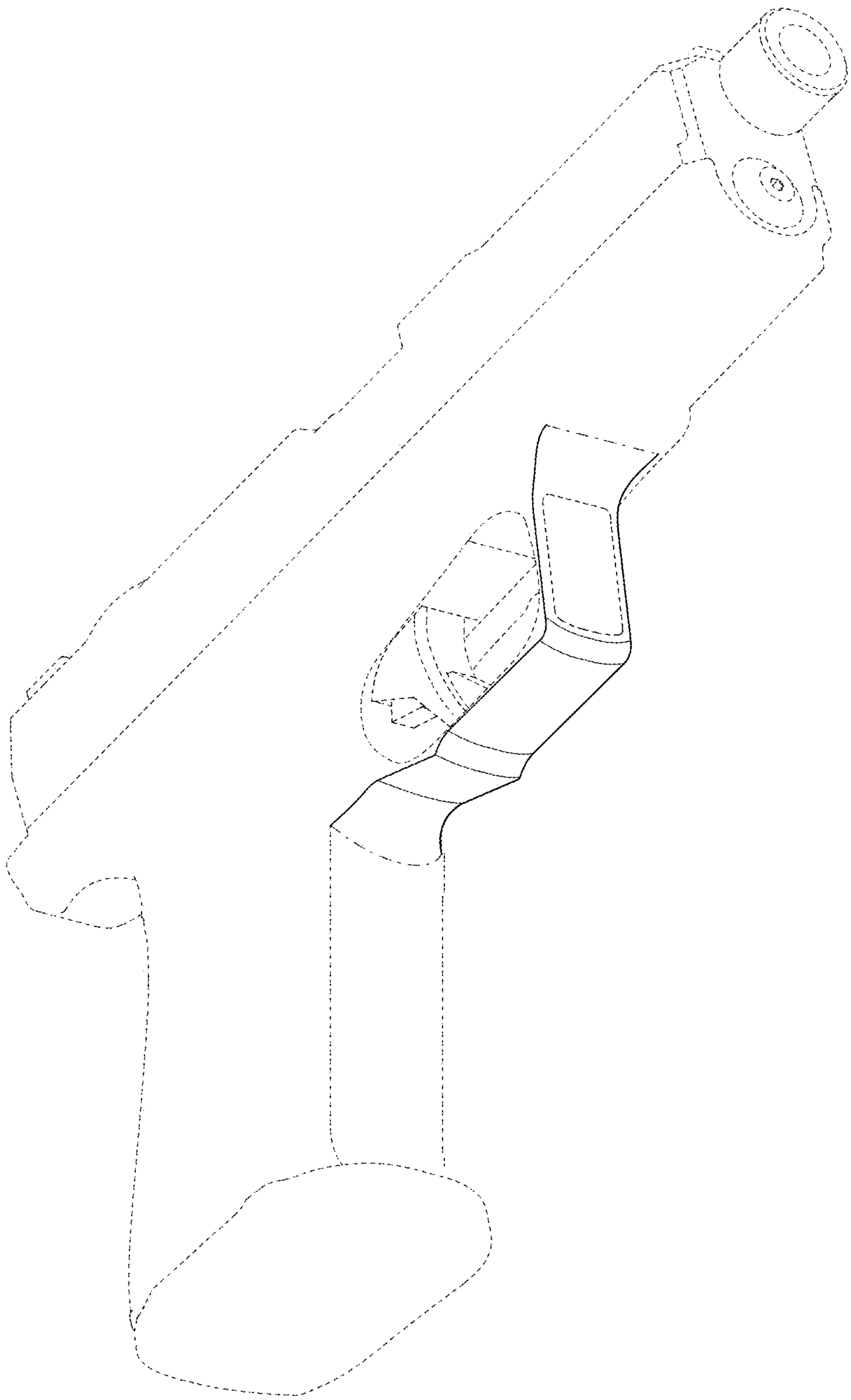

FIG. 1

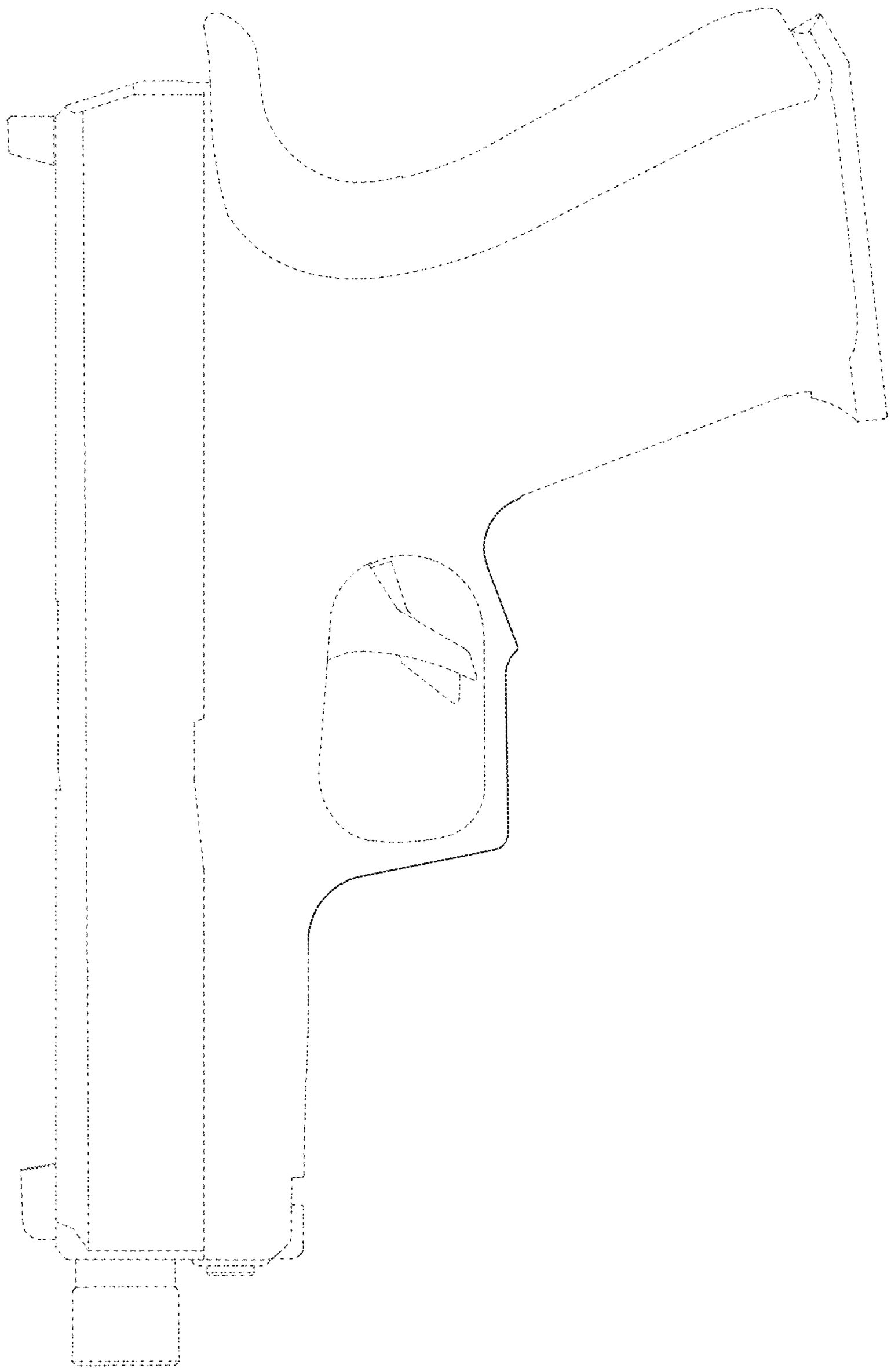

FIG. 2

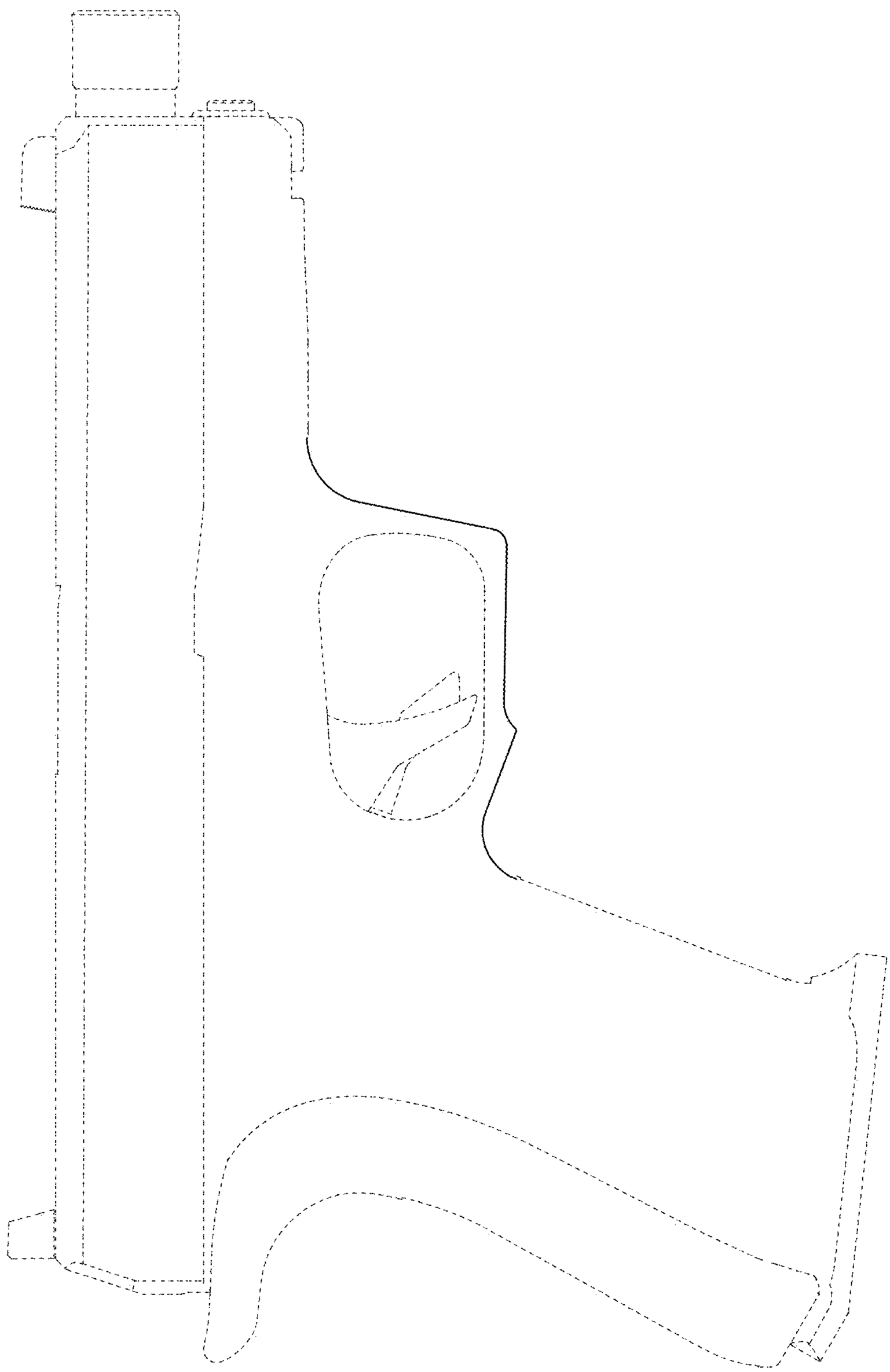

FIG. 3

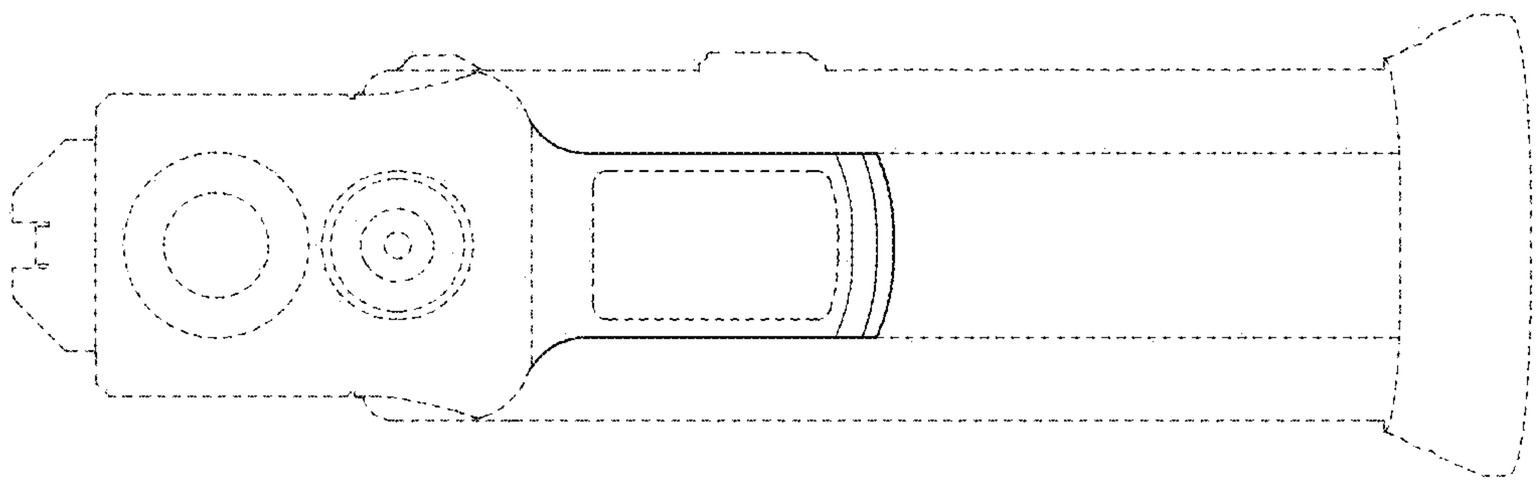

FIG. 4

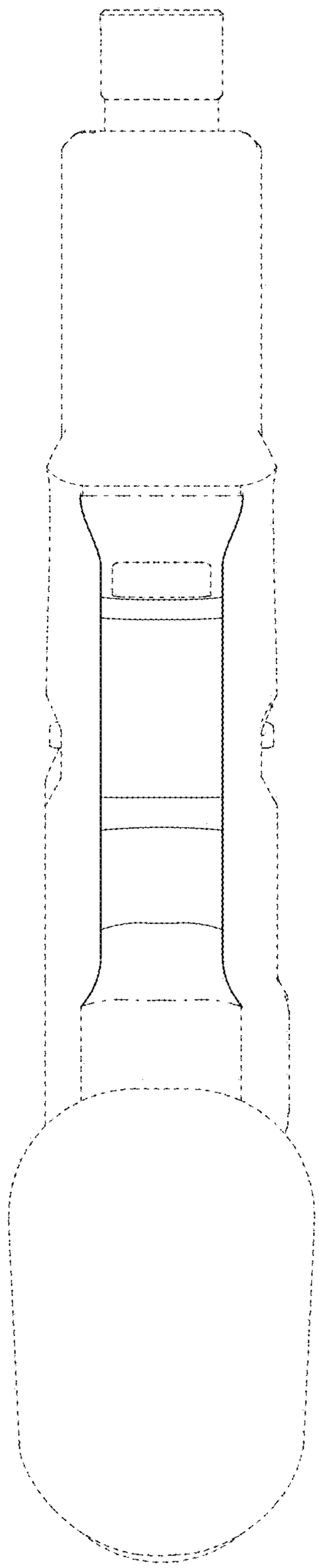

FIG. 5